DESCRIPTION: BEAMLINE ASSY, PXIE - This assembly is a collection of the the beamline components for Project X Injector Experiment (PXIE)
CATEGORY: BEAMLINE PROJECT: ProjectXInjectorExperiment

REV	REVISION CONTROL DOCUMENT	DATES	SIGNATURES
-	F10001776---RCD		DRAWN
			APPROVED

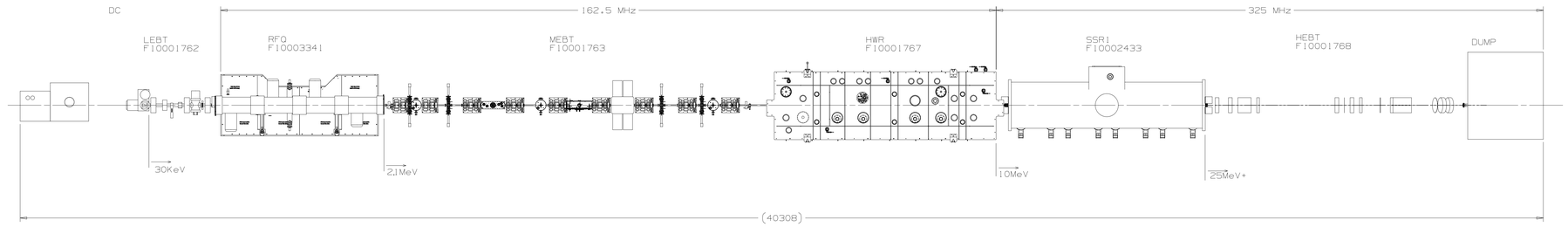

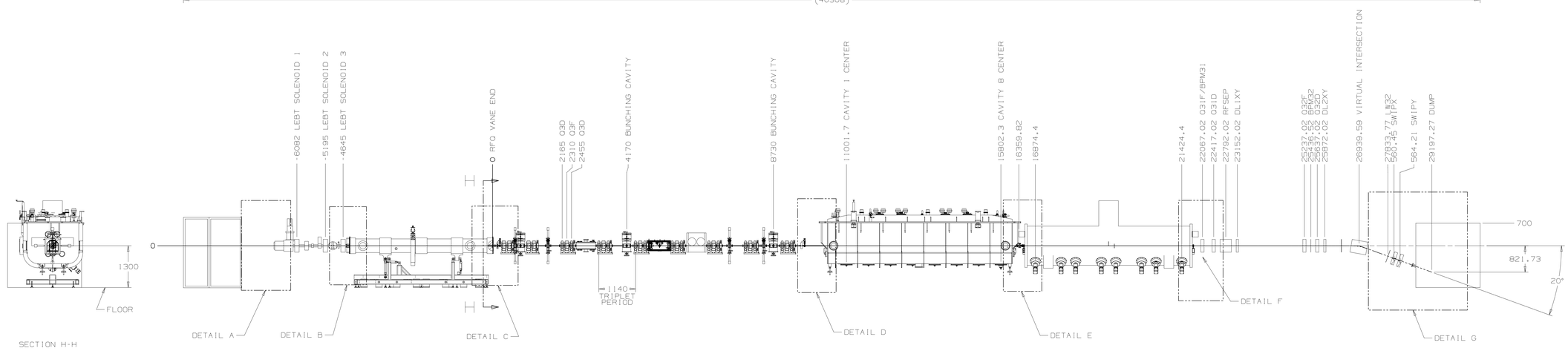

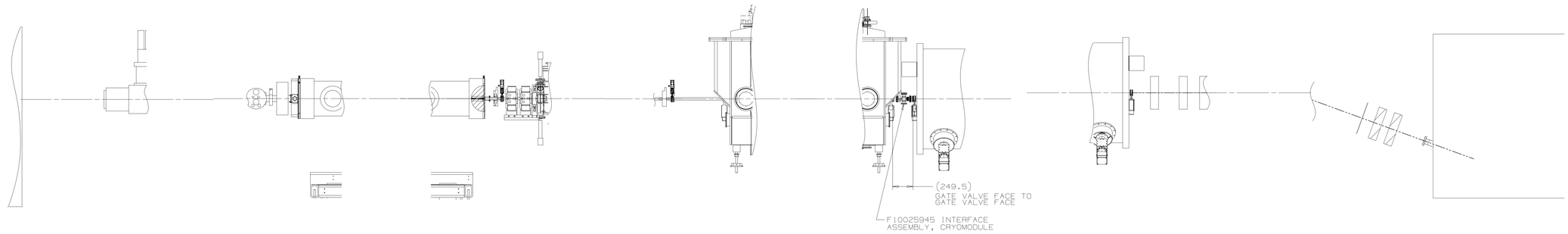

DETAIL A
SCALE 1:20
ION SOURCE

DETAIL B
SCALE 1:20
LEBT/RFQ
INTERFACE

DETAIL C
SCALE 1:20
RFQ/MEBT
INTERFACE

DETAIL D
SCALE 1:20
MEBT/HWR
INTERFACE

DETAIL E
SCALE 1:20
HWR/SSR1
INTERFACE

DETAIL F
SCALE 1:20
SSR1/HEBT
INTERFACE

DETAIL G
SCALE 1:20
HEBT/BEAM DUMP
INTERFACE

NOTES (UNLESS OTHERWISE SPECIFIED):

1. THIS DRAWING SHOWS BEAMLINE COMPONENTS FOR PXIE, AN INTEGRATED SYSTEMS TEST FOR THE PIP-II FRONT END

DRAFT, AS OF MAY 27, 2015

UNLESS OTHERWISE SPECIFIED				
±X	±X.X	±X.XX	±X/X	±X°
∠	0.3	0.12	N/A	1°

BREAK ALL SHARP EDGES 0.5 MAX.
DO NOT SCALE DRAWING
DIMENSIONS BASED ON ASME Y14.5M-2009
MAX. ALL MACH SURFACES 3.2√
DRAWING UNITS: MM

DRAWN	J.KURNAT	DATE	14-May-2014
CHECKED		DATE	
APPROVED		DATE	
USED ON	F10001748		
MATERIAL	-		

GROUP: Technical Division - Design and Drafting CAGE CODE: 0U5R6

FERMI NATIONAL ACCELERATOR LABORATORY
UNITED STATES DEPARTMENT OF ENERGY

NAME: BEAMLINE ASSY, PXIE

SCALE	SIZE	DRAWING NUMBER	SHEET	REV
1:1 AS SHOWN	A0	F10001776	1 OF 1	-