DESCRIPTION: ASSEMBLY, PROJECT X INJECTOR EXPERIMENT - Top level layout of entire system.
CATEGORY: ASSEMBLY PROJECT: PIP-II_PXIEFacility

REV	REVISION CONTROL DOCUMENT	DATES	SIGNATURES
-	F10001748---RCD		DRAWN / APPROVED

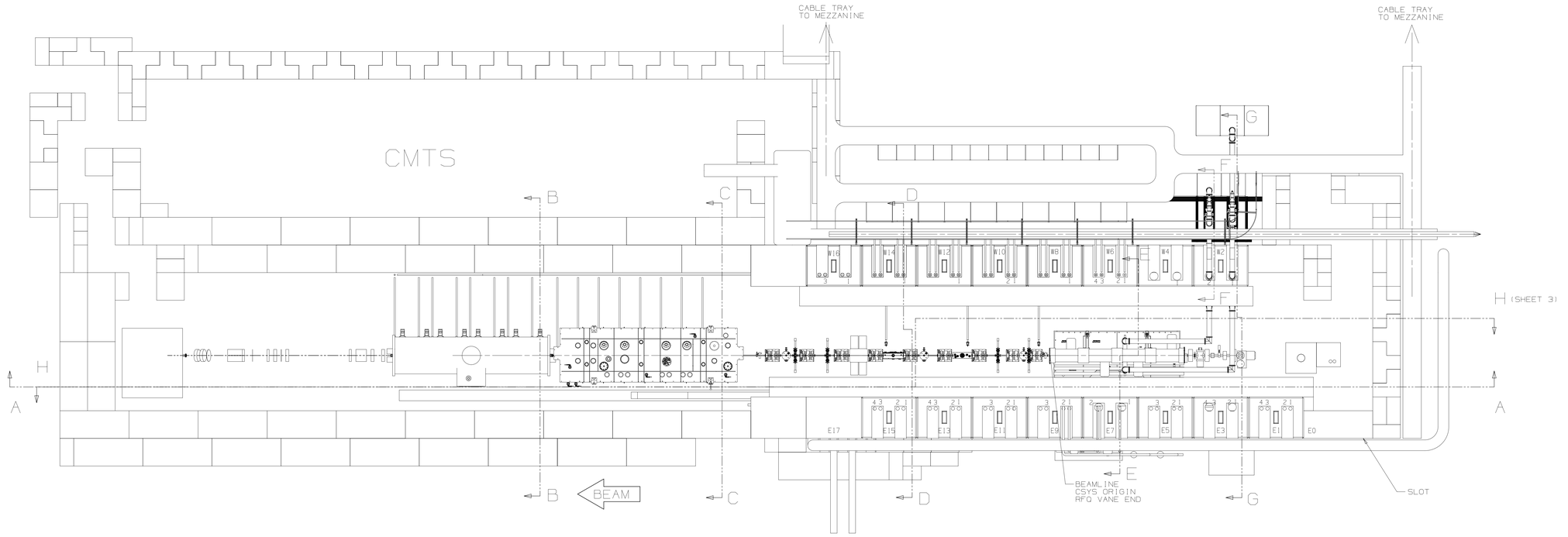

PENETRATION	PRIMARY USE(S)
E0	ION SOURCE CABLING, HYDROGEN
E1 1	LEBT INSTRUMENTATION
E1 2	LEBT INSTRUMENTATION
E1 3	VACUUM SYSTEM
E1 4	LEBT CHOPPER
E3 1	
E3 2	ION SOURCE CHILLER
E5 1	Motion
E5 2	Motion
E5 3	LCW SUPPLY
E5 4	LSW RETURN, COMPRESSED AIR
E7 1	RFQ COOLING SYSTEM
E7 2	RFQ COOLING SYSTEM
E9 1	RFQ COOLING SYSTEM
E9 2	RFQ COOLING SYSTEM
E9 3	MEBT INSTRUMENTATION
E9 4	MEBT INSTRUMENTATION
E11 1	MEBT CHOPPER
E11 2	
E11 3	MEBT INSTRUMENTATION
E11 4	MEBT INSTRUMENTATION
E13 1	MEBT CHOPPER
E13 2	HWR SOLENOIDS
E13 3	HWR CORRECTORS
E13 4	
E15 1	CHOPPER
E15 2	CHOPPER
E15 3	SSR CORRECTORS
E15 4	SSR SOLENOIDS
E17	
SLOT	AC

PENETRATION	PRIMARY USE(S)
W2 1	RFQ RF COAX
W2 2	RFQ RF COAX
W4 1	LLRF
W4 2	LLRF
W4 3	LLRF
W4 4	LLRF
W6 1	LLRF
W6 2	MEBT BUNCHING CAVITY RF COAX
W6 3	MEBT BUNCHING CAVITY RF COAX
W6 4	MEBT BUNCHING CAVITY RF COAX
W8 1	HWR RF COAX
W8 2	HWR RF COAX
W8 3	HWR RF COAX
W8 4	HWR RF COAX
W10 1	HWR RF COAX
W10 2	HWR RF COAX
W10 3	HWR RF COAX
W10 4	HWR RF COAX
W12 1	SSR RF COAX
W12 2	SSR RF COAX
W12 3	SSR RF COAX
W12 4	SSR RF COAX
W14 1	SSR RF COAX
W14 2	SSR RF COAX
W14 3	SSR RF COAX
W14 4	SSR RF COAX
W16 1	RF SEPARATOR COAX
W16 2	HWR/SSR1 INSTRUMENTATION
W16 3	HEBT INSTRUMENTATION
W16 4	HEBT INSTRUMENTATION

NOTES (UNLESS OTHERWISE SPECIFIED):

1. THIS DRAWING SHOWS PXIE - AN INTEGRATED SYSTEMS TEST FOR THE PIP-II FRONT END
2. DESIGN BEAM PARAMETERS: 25MeV, 1mA CW (UPGRADABLE TO 2mA)

DRAFT AS OF JUNE 1, 2015

UNLESS OTHERWISE SPECIFIED: X.X ±X.XX ±X.XX ±X.X; 0.3 ±0.12 N/A 1°
BREAK ALL SHARP EDGES 0.5 MAX.
DO NOT SCALE DRAWING
DIMENSIONS BASED ON ASME Y14.5M-2009
MAX. ALL MACH SURFACES 3.2
DRAWING UNITS: MM

DRAWN	J.KURNAT	DATE	28-May-2014
CHECKED		DATE	
APPROVED		DATE	
USED ON	F10001766		
MATERIAL	-		
GROUP: Technical Division - Design and Drafting		CAGE CODE: 0U5R6	

FERMI NATIONAL ACCELERATOR LABORATORY
UNITED STATES DEPARTMENT OF ENERGY

NAME: ASSEMBLY, PROJECT X INJECTOR EXPERIMENT

SCALE	SIZE	DRAWING NUMBER	SHEET	REV
1:1	A0	F10001748	1 OF 3	-

DESCRIPTION: ASSEMBLY, PROJECT X INJECTOR EXPERIMENT - Top level layout of entire system.
CATEGORY: ASSEMBLY - PROJECT: PIP-II_PXIEFacility

REV.	REVISION CONTROL DOCUMENT	DATES	SIGNATURES
-	F10001748---RCD		DRAWN
			APPROVED

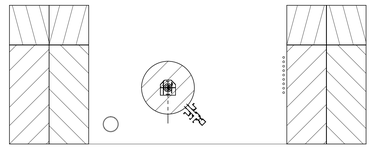

SECTION B-B
SSR1

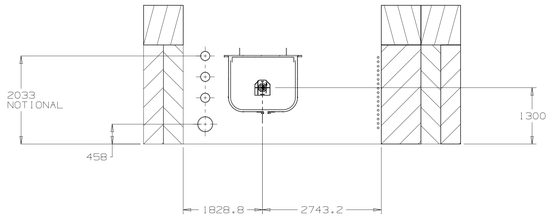

SECTION C-C
HWR

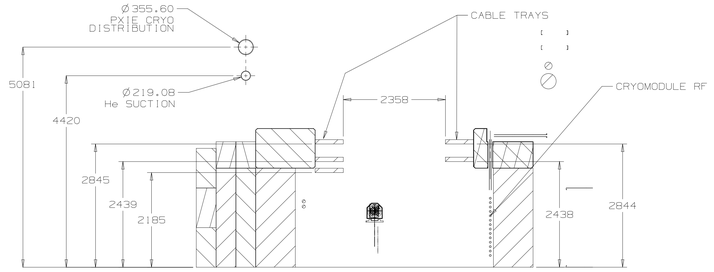

SECTION D-D
MEBT

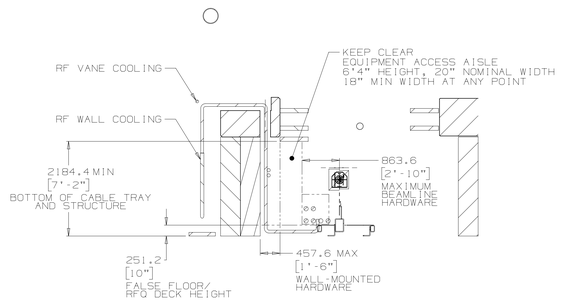

SECTION E-E
RFQ

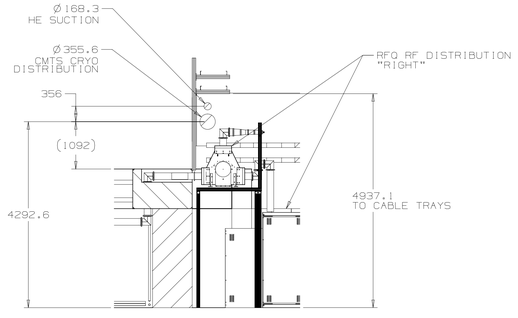

SECTION F-F
RF PIPING

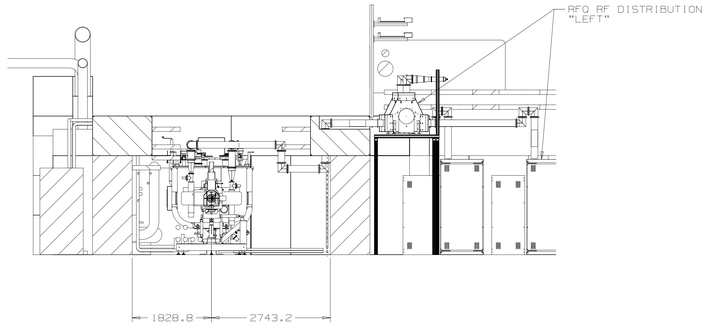

SECTION G-G
LEBT

UNLESS OTHERWISE SPECIFIED				
±X	±X.X	±X.XX	±X/X	±X°
2	0.3	0.12	N/A	1°

BREAK ALL SHARP EDGES 0.5 MAX.
DO NOT SCALE DRAWING
DIMENSIONS BASED ON ASME Y14.5M-2009
MAX. ALL MACH SURFACES 3.2
DRAWING UNITS: MM

DRAWN	J.KURNAT	DATE	28-May-2014
CHECKED		DATE	
APPROVED		DATE	

USED ON: F10001766
MATERIAL:
GROUP: Technical Division - Design and Drafting | CAGE CODE: 0USR6

FERMI NATIONAL ACCELERATOR LABORATORY
UNITED STATES DEPARTMENT OF ENERGY

NAME: ASSEMBLY, PROJECT X INJECTOR EXPERIMENT

SCALE	SIZE	DRAWING NUMBER	SHEET	REV
1:1	A0	F10001748	2 OF 3	-

DESCRIPTION: ASSEMBLY, PROJECT X INJECTOR EXPERIMENT - Top level layout of entire system.
CATEGORY: ASSEMBLY PROJECT: PIP-II_PX1Facility

REV.	REVISION CONTROL DOCUMENT	DATES	SIGNATURES
-	F10001748---RCD		DRAWN
			APPROVED

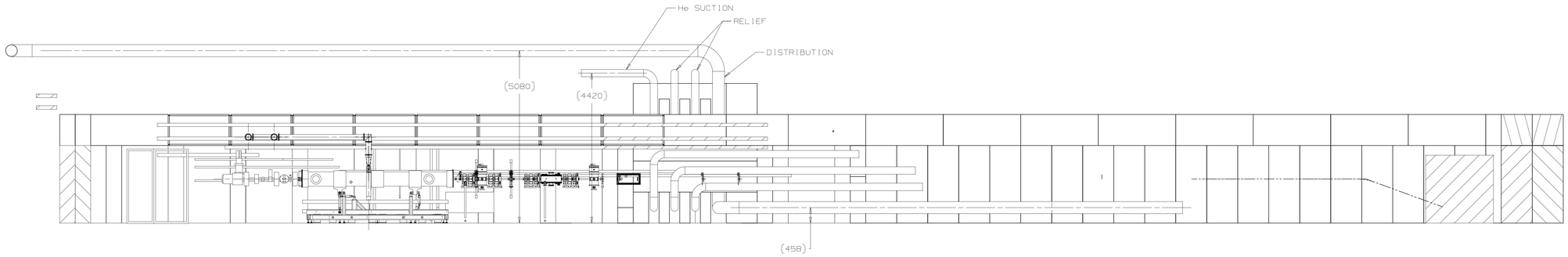

SECTION H-H
SCALE 1:50

UNLESS OTHERWISE SPECIFIED				
±X	±X.X	±X.XX	±X/X	±X°
2	0.3	0.12	N/A	1°

BREAK ALL SHARP EDGES 0.5 MAX.
DO NOT SCALE DRAWING
DIMENSIONS BASED ON ASME Y14.5M-2009
MAX. ALL MACH SURFACES 3.2
DRAWING UNITS: MM

DRAWN	J.KURNAT	DATE	28-May-2014
CHECKED		DATE	
APPROVED		DATE	

USED ON: F10001766

MATERIAL:

GROUP: Technical Division - Design and Drafting | CAGE CODE: 0USR6

FERMI NATIONAL ACCELERATOR LABORATORY
UNITED STATES DEPARTMENT OF ENERGY

NAME: ASSEMBLY, PROJECT X INJECTOR EXPERIMENT

SCALE	SIZE	DRAWING NUMBER	SHEET	REV
	A0	F10001748	3 OF 3	-