DESCRIPTION: ASSEMBLY, PROJECT X INJECTOR EXPERIMENT - Top level layout of entire system.
CATEGORY: ASSEMBLY PROJECT: ProjectXPXIEFacility

REV	REVISION CONTROL DOCUMENT	DATES	SIGNATURES
-	F10001748---RCD		DRAWN
			APPROVED

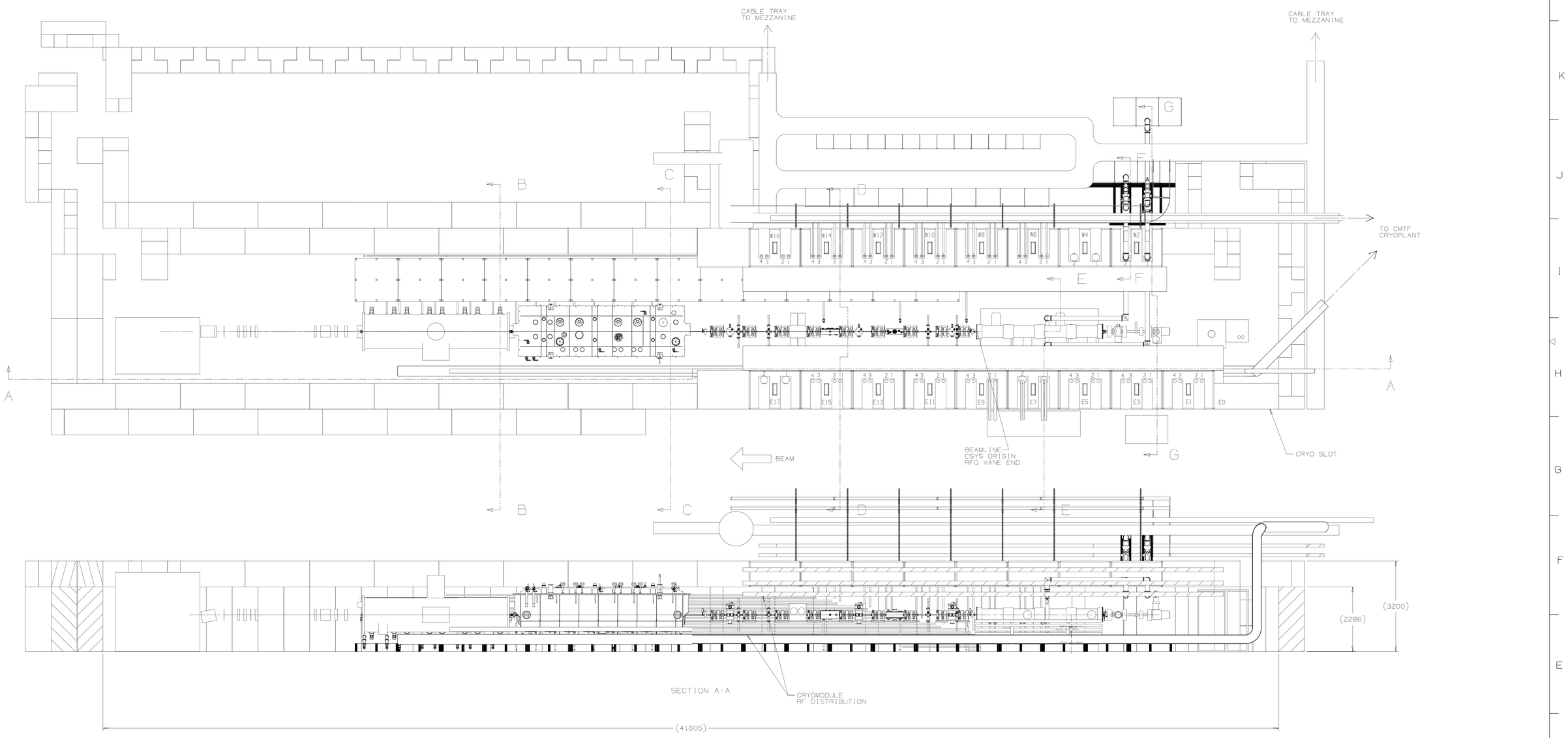

PENETRATION	PRIMARY USE(S)
E0	ION SOURCE CABLING, HYDROGEN
E1 1	LEBT INSTRUMENTATION
E1 2	LEBT INSTRUMENTATION
E1 3	VACUUM SYSTEM
E1 4	LEBT CHOPPER
E3 1	
E3 2	ION SOURCE CHILLER
E5 1	Motion
E5 2	Motion
E5 3	LCW SUPPLY
E5 4	LSW RETURN, COMPRESSED AIR
E7 1	RFQ COOLING SYSTEM
E7 2	RFQ COOLING SYSTEM
E9 1	RFQ COOLING SYSTEM
E9 2	RFQ COOLING SYSTEM
E9 3	MEBT INSTRUMENTATION
E9 4	MEBT INSTRUMENTATION
E11 1	MEBT CHOPPER
E11 2	
E11 3	MEBT INSTRUMENTATION
E11 4	MEBT INSTRUMENTATION
E13 1	MEBT CHOPPER
E13 2	HWR SOLENOIDS
E13 3	HWR CORRECTORS
E13 4	
E15 1	CHOPPER
E15 2	CHOPPER
E15 3	SSR CORRECTORS
E15 4	SSR SOLENOIDS
E17 1	
E17 2	

PENETRATION	PRIMARY USE(S)
CRYO SLOT	CRYOGENICS, AC
W2 1	RFQ RF COAX
W2 2	RFQ RF COAX
W4 1	LLRF
W4 2	LLRF
W4 3	LLRF
W4 4	LLRF
W6 1	LLRF
W6 2	MEBT BUNCHING CAVITY RF COAX
W6 3	MEBT BUNCHING CAVITY RF COAX
W6 4	MEBT BUNCHING CAVITY RF COAX
W8 1	HWR RF COAX
W8 2	HWR RF COAX
W8 3	HWR RF COAX
W8 4	HWR RF COAX
W10 1	HWR RF COAX
W10 2	HWR RF COAX
W10 3	HWR RF COAX
W10 4	HWR RF COAX
W12 1	SSR RF COAX
W12 2	SSR RF COAX
W12 3	SSR RF COAX
W12 4	SSR RF COAX
W14 1	SSR RF COAX
W14 2	SSR RF COAX
W14 3	SSR RF COAX
W14 4	SSR RF COAX
W16 1	RF SEPARATOR COAX
W16 2	HWR/SSR1 INSTRUMENTATION
W16 3	HEBT INSTRUMENTATION
W16 4	HEBT INSTRUMENTATION

DRAFT AS OF OCT 08, 2014

UNLESS OTHERWISE SPECIFIED
±X ±X.X ±X.XX ±X/X ±X°
2 0.3 0.12 N/A 1°
BREAK ALL SHARP EDGES 0.5 MAX.
DO NOT SCALE DRAWING
DIMENSIONS BASED ON ASME Y14.5M-2009
MAX. ALL MACH SURFACES 3.2
DRAWING UNITS: MM

DRAWN	J.KURNAT	DATE	28-May-2014
CHECKED		DATE	
APPROVED		DATE	
USED ON	F10001766		
MATERIAL	-		
GROUP: Technical Division - Design and Drafting		CAGE CODE: OUSR6	

FERMI NATIONAL ACCELERATOR LABORATORY
UNITED STATES DEPARTMENT OF ENERGY

NAME
ASSEMBLY, PROJECT X INJECTOR EXPERIMENT

SCALE	SIZE	DRAWING NUMBER	SHEET	REV
1:1	A0	F10001748	1 OF 2	-

DESCRIPTION: ASSEMBLY, PROJECT-X INJECTOR EXPERIMENT : Top level layout of entire system.
CATEGORY: ASSEMBLY PROJECT: Proj_ectXPXIEFacility

REV.	REVISION CONTROL DOCUMENT	DATES	SIGNATURES
-	F10001748---RCD		DRAWN
			APPROVED

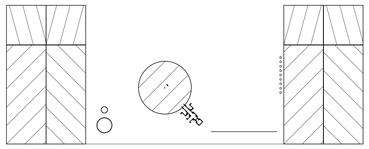

SECTION B-B

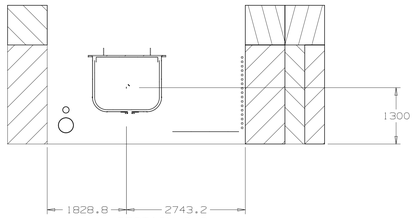

SECTION C-C

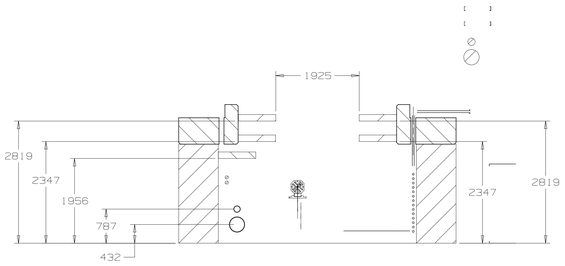

SECTION D-D

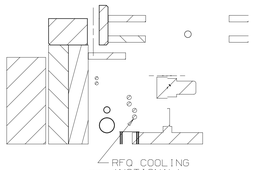

SECTION E-E

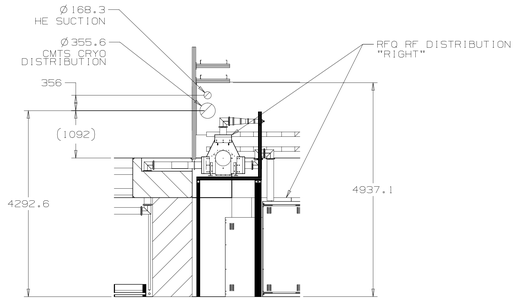

SECTION F-F

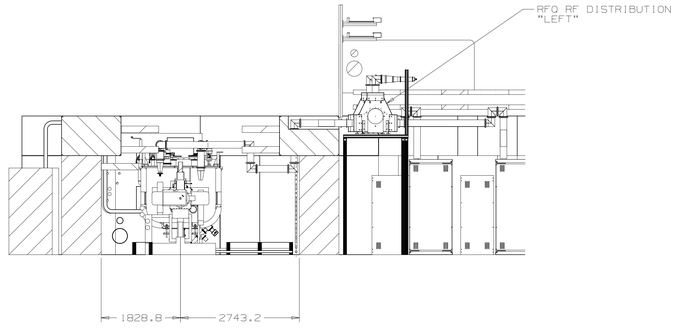

SECTION G-G

UNLESS OTHERWISE SPECIFIED				
±X	±X.X	±X.XX	±X/X	±X°
2	0.3	0.12	N/A	1°

BREAK ALL SHARP EDGES 0.5 MAX.
DO NOT SCALE DRAWING
DIMENSIONS BASED ON ASME Y14.5M-2009
MAX. ALL MACH SURFACES 3.2
DRAWING UNITS: MM

DRAWN	J.KURNAT	DATE	28-May-2014
CHECKED		DATE	
APPROVED		DATE	

USED ON: F10001766

MATERIAL

GROUP: Technical Division - Design and Drafting | CAGE CODE: 0USR6

FERMI NATIONAL ACCELERATOR LABORATORY
UNITED STATES DEPARTMENT OF ENERGY

NAME: ASSEMBLY, PROJECT X INJECTOR EXPERIMENT

SCALE	SIZE	DRAWING NUMBER	SHEET	REV
1:1	A0	F10001748	2 of 2	-