Fermi National Accelerator Laboratory

Project X

RF Design Studies of PXIE RFQ and Buncher Cavities.

G. Romanov

October 25, 2011
ProjectX Collaboration Meeting

Talk Outline

Project X

- **The RFQ RF design**
  - General on the RFQ design
  - Cross-section
  - Input-output terminations
  - PISLs and tuners
  - Modules
  - Vane modulation
  - Full scale model
- **QWR re-buncher RF design**
  - Main parameters of the re-buncher
  - Steering effect
  - Multipacting
  - Heating
- **Conclusion**

General

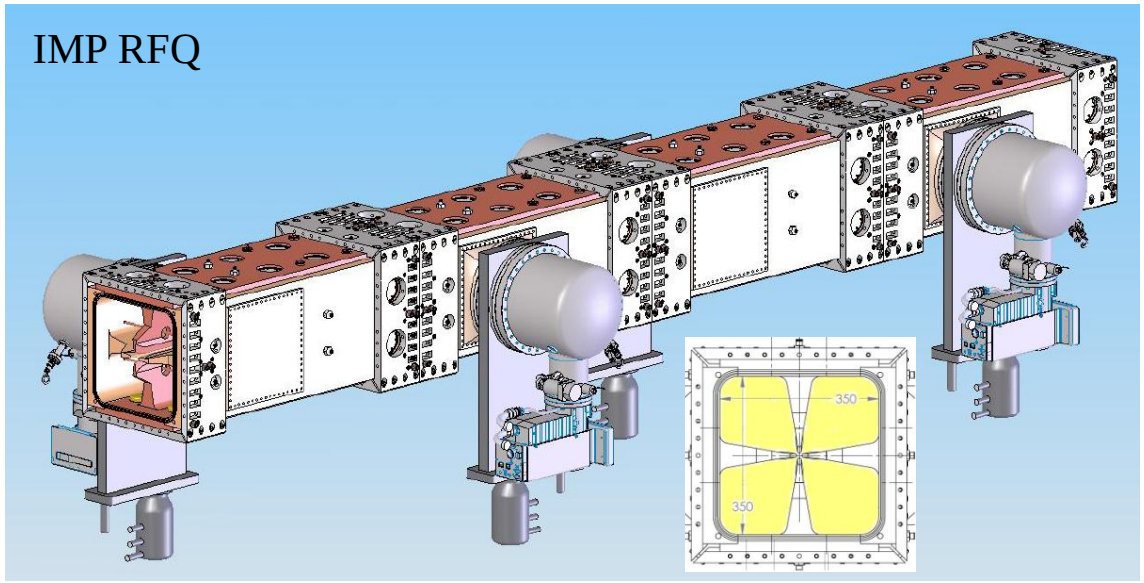

LBNL conceptual design for PXIE is close to IMP RFQ
Vane length 4386 mm
Four modules of equal length
80 tuners
8 vacuum ports
2 power coupler ports
32 PISL rods

Sequence of the RF design steps

- **RFQ cross-section. Main parameters.**
- **PISL period. Influence of the PISLs on the quadrupole and dipole mode frequencies.**
- **PISL period with tuners. Tuning sensitivity.**
- **Input and output terminations. Shape of the undercuts.**
- **Central module with PISLs and tuners. To verify parameters with real PISL and tuners spacing**
- **Full length model simulation.**

RFQ cross-section

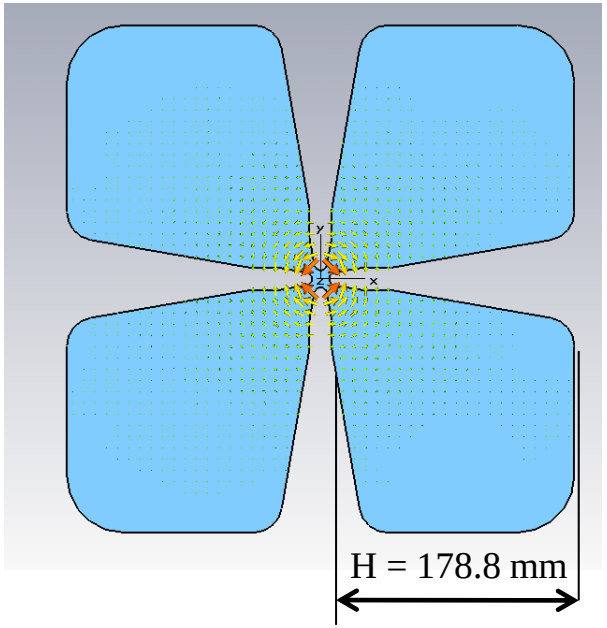

Parameters	Value (MWS)	Unit
Frequency	160.091	MHz
Vane-vane voltage	60	kV
Power loss per cm	130.7	W
Max power loss density	0.634	W/cm^2
Peak electric field	13.38	MV/m
Dipole mode freq.	155.2	MHz
Q factor	16906	
r0, mean aperture	5.576	mm

Tuning coefficients: dF/dH = 1 MHz/mm
dF/dr0 = 4 kHz/μm

Value of H is approximate. The PISLs and the tuners are to be installed and the RFQ re-tuning will be required.

Estimated power consumption for full length RFQ: **57.4 kW** (no matchers, PISLs, tuners, ports, couplers, pick ups)

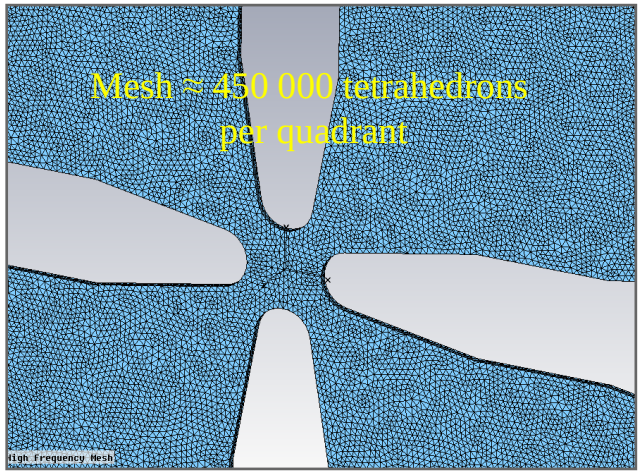

HFSS for the same model with 70,000 tetrahedrons per quadrant:
160.089 MHz

Pi-mode Stabilizing Loops

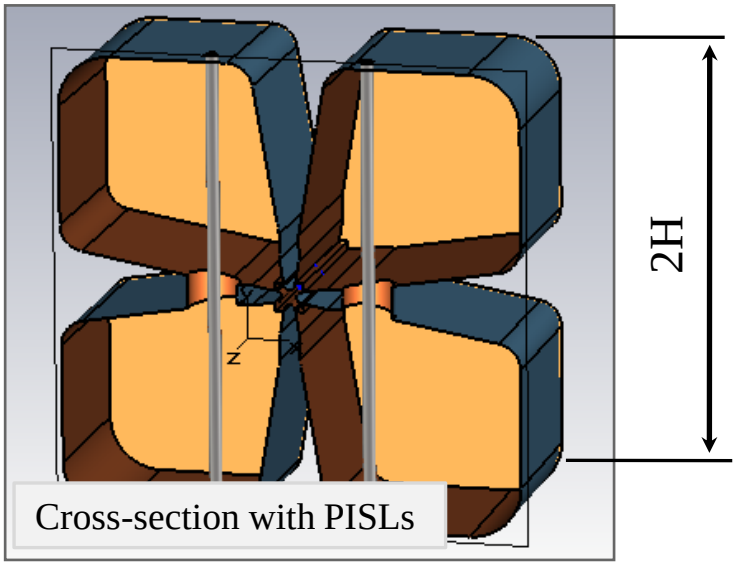

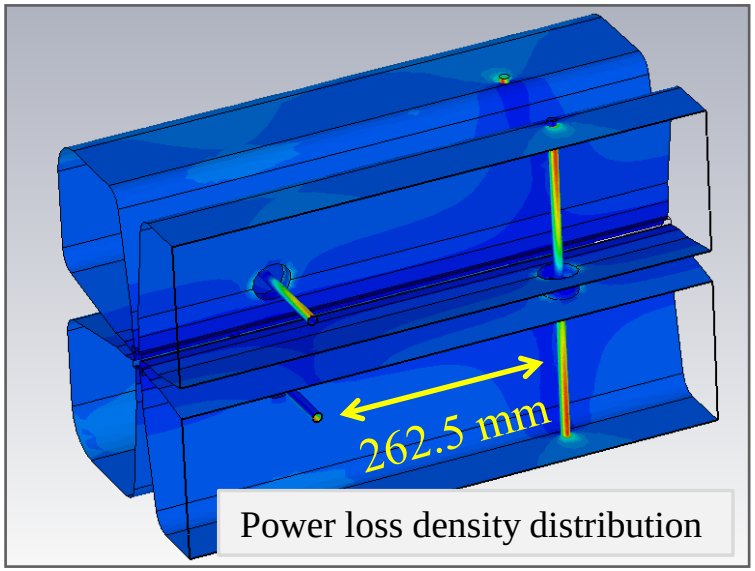

Note: The model cross-section corresponds to the PXIE design. Other dimensions are taken from mechanical design of the IMP RFQ

Period = 525 mm
PISL X(Y) = 60 mm (from RFQ center to PISL)
PISL rode radius 5 mm
PISL hole radius 20 mm
Distance between pairs of PISLs = 262.5 mm
F_quad shift due to PISLs = -5.9 MHz
F_dipole due to to PISLs = + 18.8 MHz

<u>After rough re-tuning:</u>
Transverse internal size 2H = 344 mm
Q = 15174
F_quad = 161.4 MHz
F_dipole = 180.2 MHz
Power loss per period = 8.4 kW
Power loss per PISL rod = 187 W
(i.e. total power losses in the PISLs is ≈9% of total losses)
Max power loss density = 7.73 W/cm^2

Tuners in PISL period

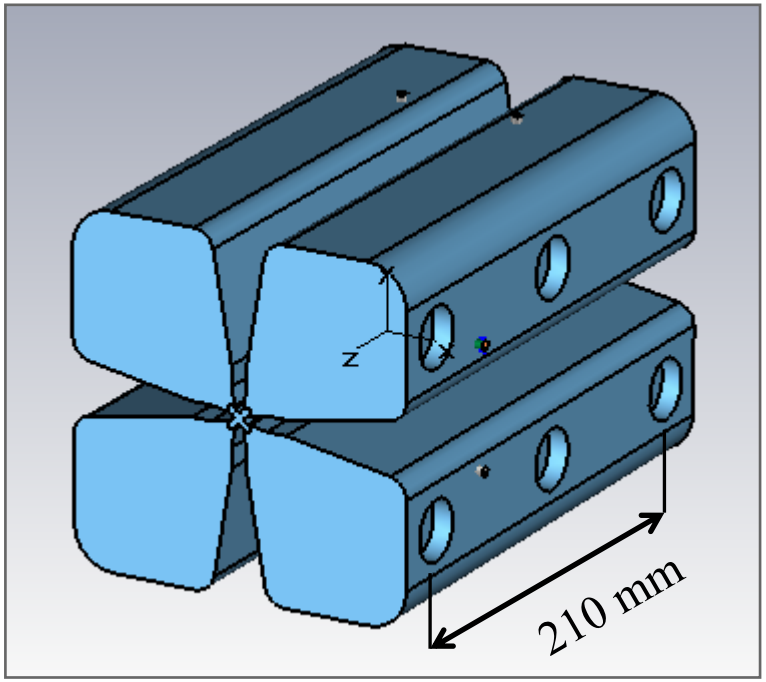

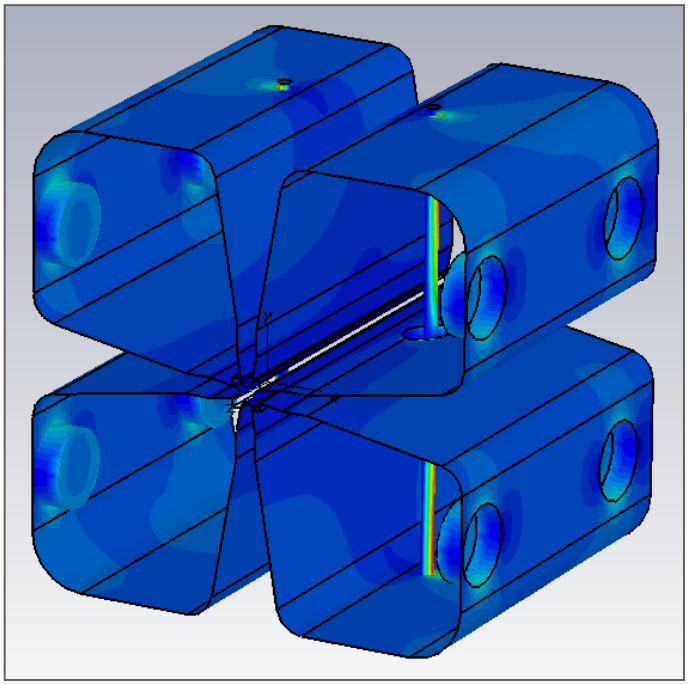

<u>After tuner installation</u>
Tuner diameter = 60 mm
Tuner nominal length = 20 mm
Tuner spacing = 210 mm
Number of tuners per PISL period = 12
Group tuner sensitivity = 1 MHz/cm
F_quad = 163.4 MHz
F_dipole = 181.6 MHz

<u>After tuning to F_quad=162.5 MHz</u>
Q = 14520
2H = 345.2 mm
Total power loss = 8.83 kW
(+0.43 kW due to the tuners)

Input termination

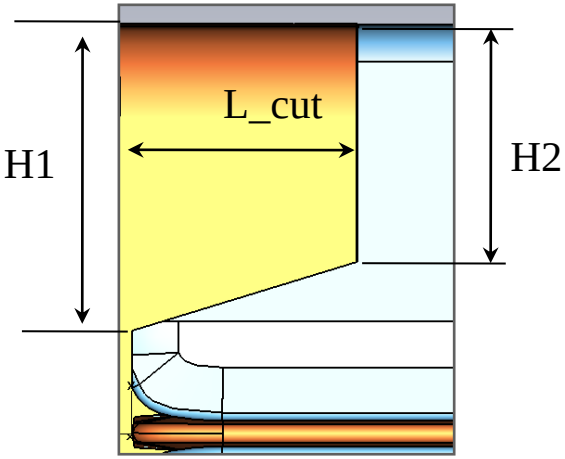

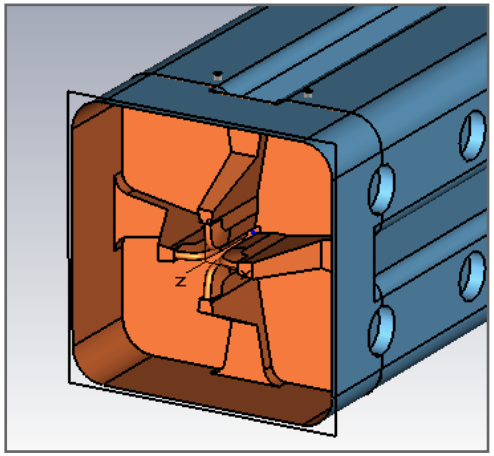

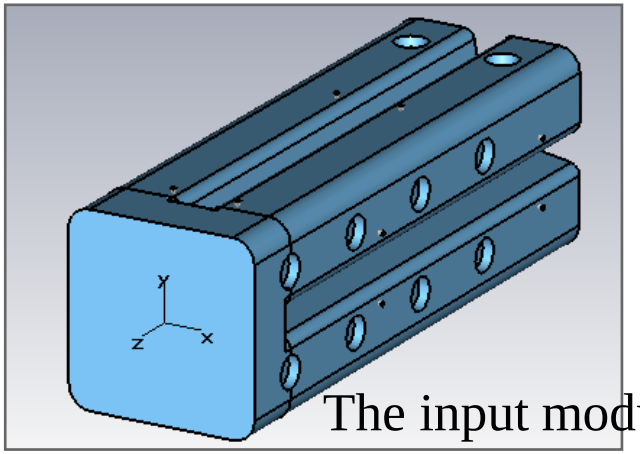

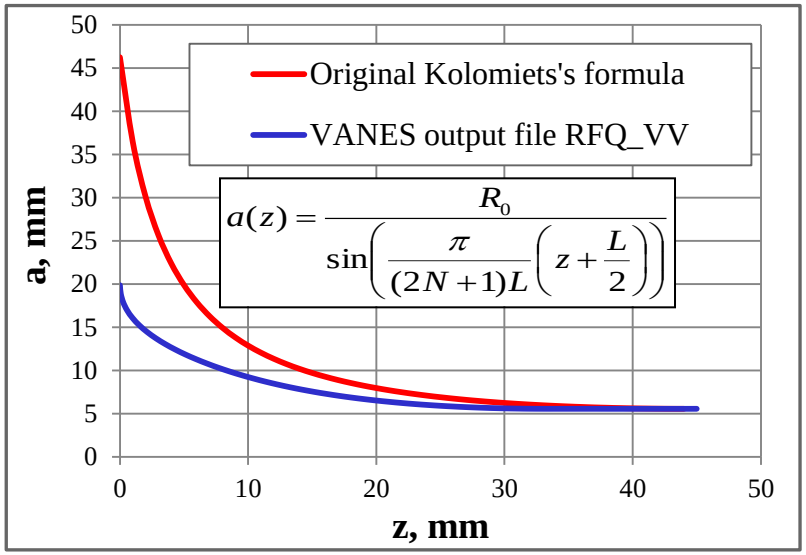

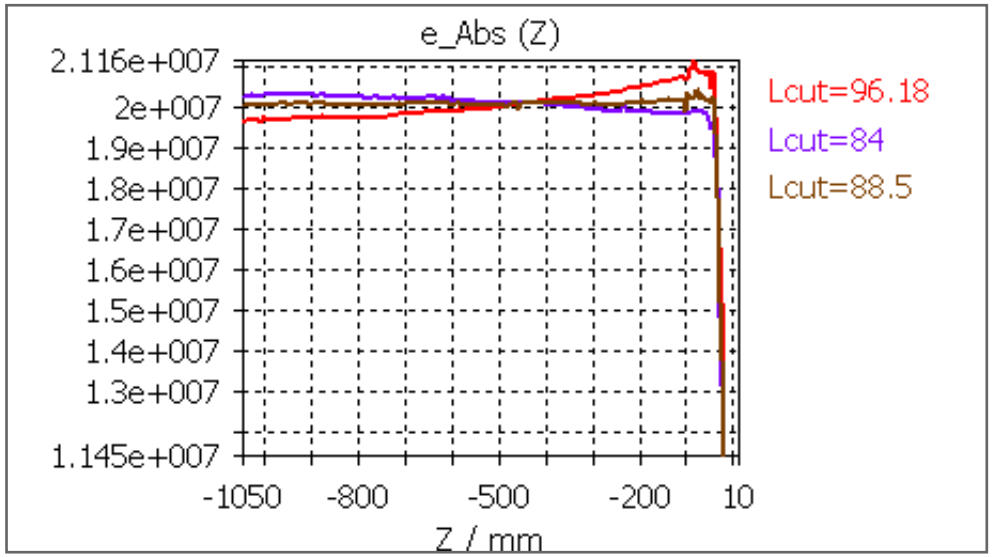

R0 = 5.576 mm; N = 6; L = 7.4 mm

E_abs(z) along line x=y=4 mm (≈ center of the gap)

Output termination

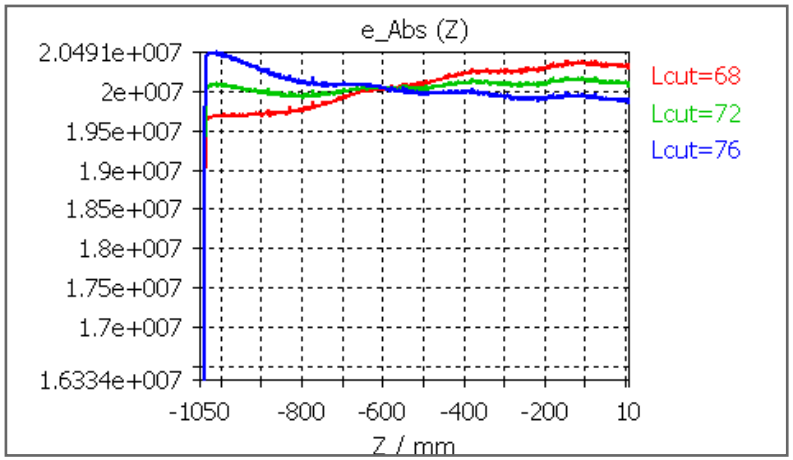

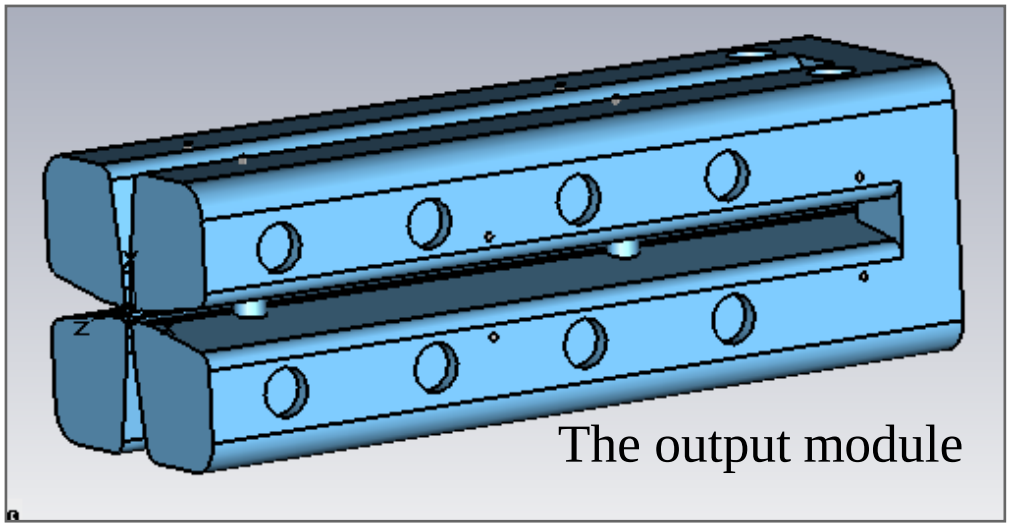

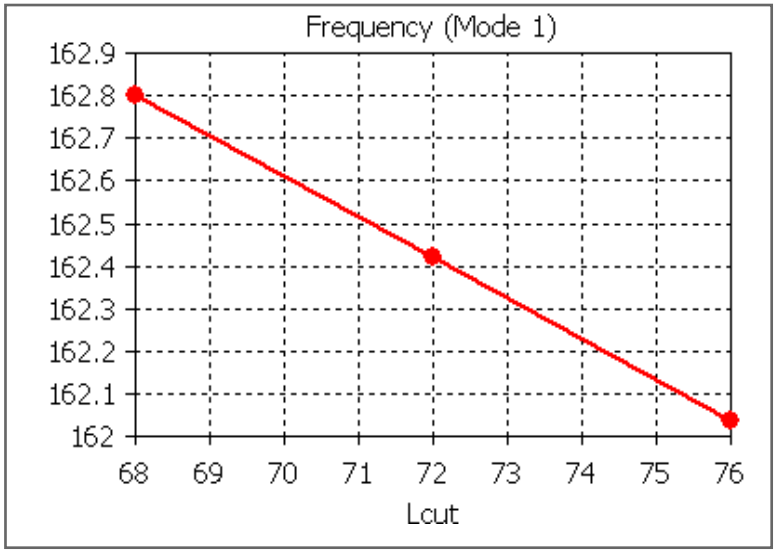

We can tune a frequency of termination using short model. Or flatten a field distribution in a sufficien-tly long model.
Tuning with field tilt control is more accurate, though it requires more resources.

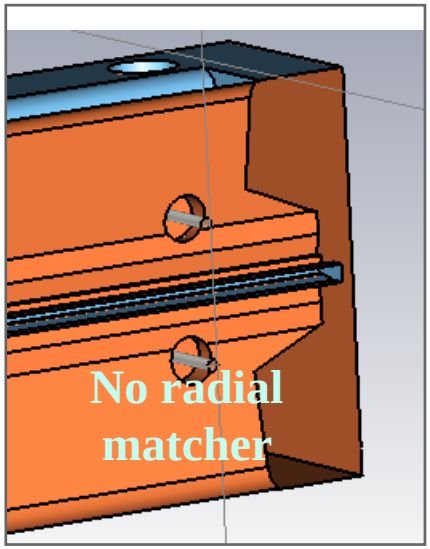

Central module. Complete model.

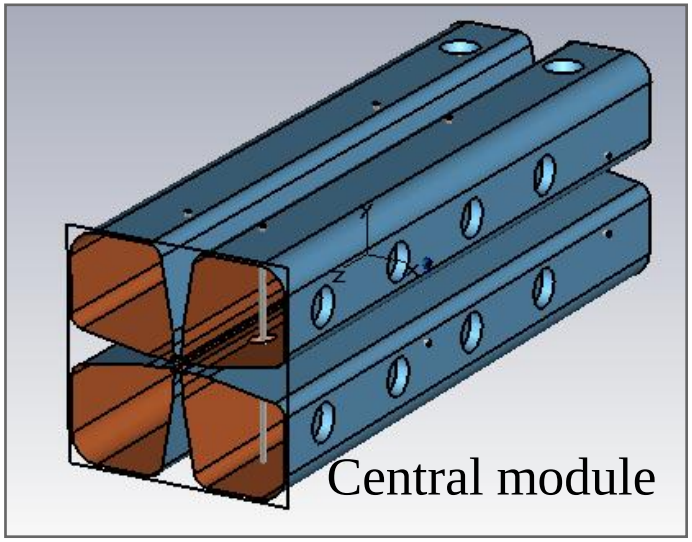

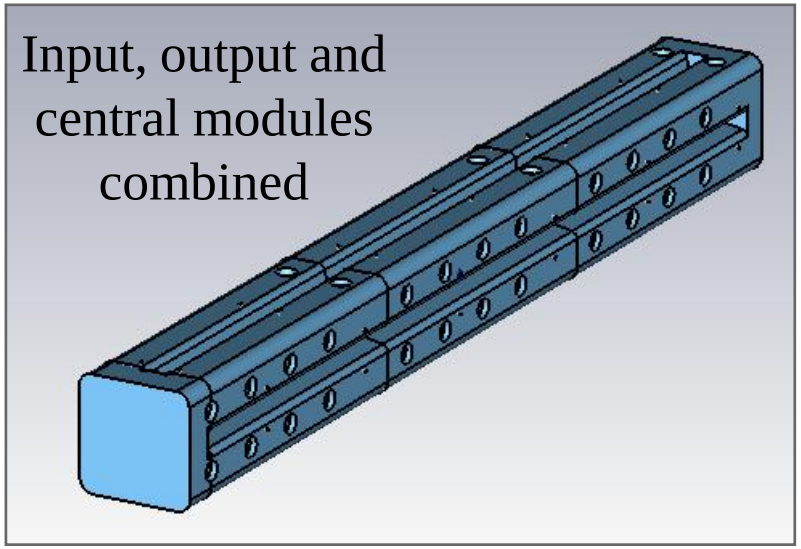

The RFQ consists of four modules that are different from regular PISL periods. So, for accurate result the modules should be modeled as is.

To check the separate tuning of the modules a complete model consisting of the input, central and output modules has been simulated.

Fquad = 162.4 MHz; Fdipole = 183.7 MHz
Q = 14920; P = 70 kW (second central module is included)

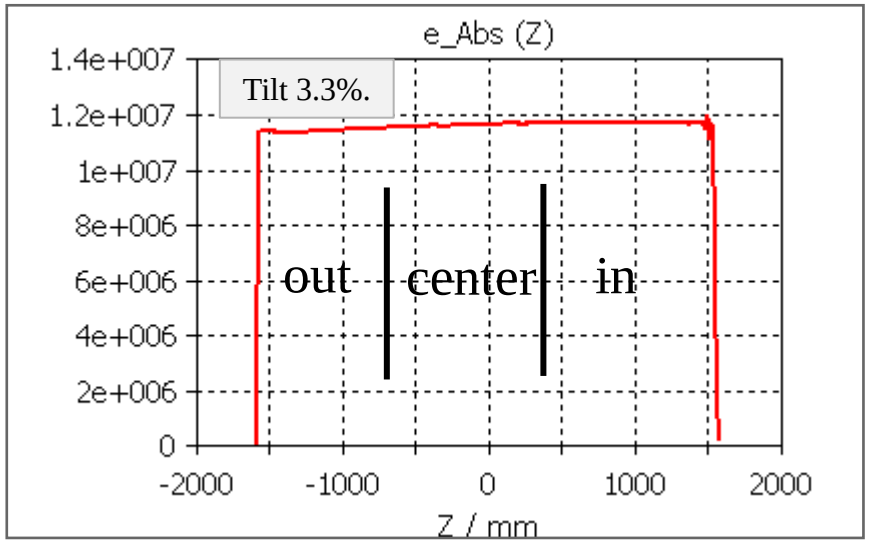

Vane modulation

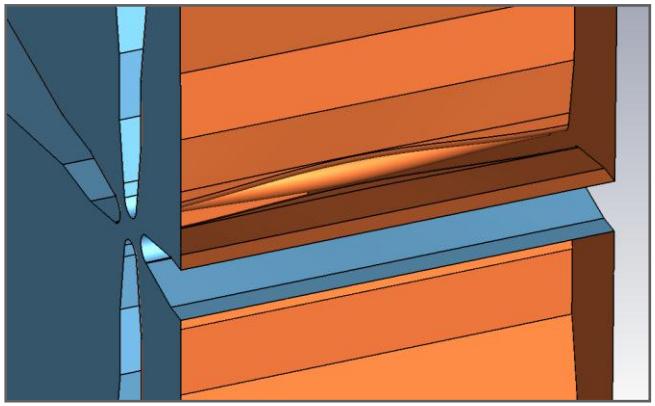

Modulation in cell #170,
m=2.2, L_cell=44.446 mm

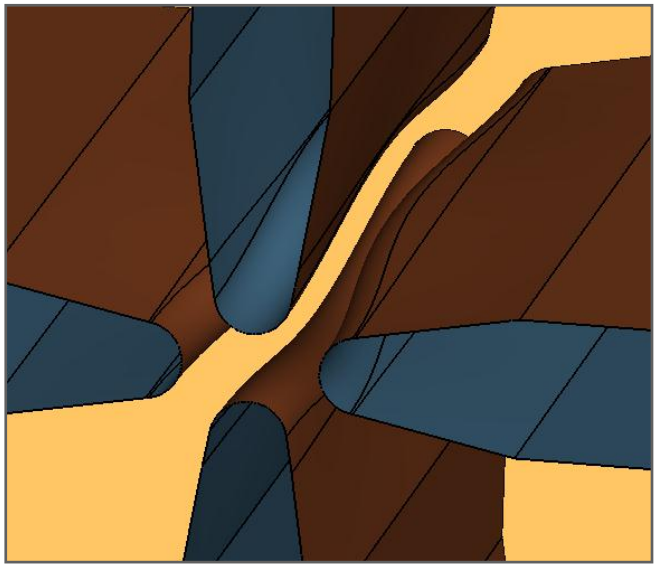

Vertical vane tip coordinate,
VANES output file for PXIE design

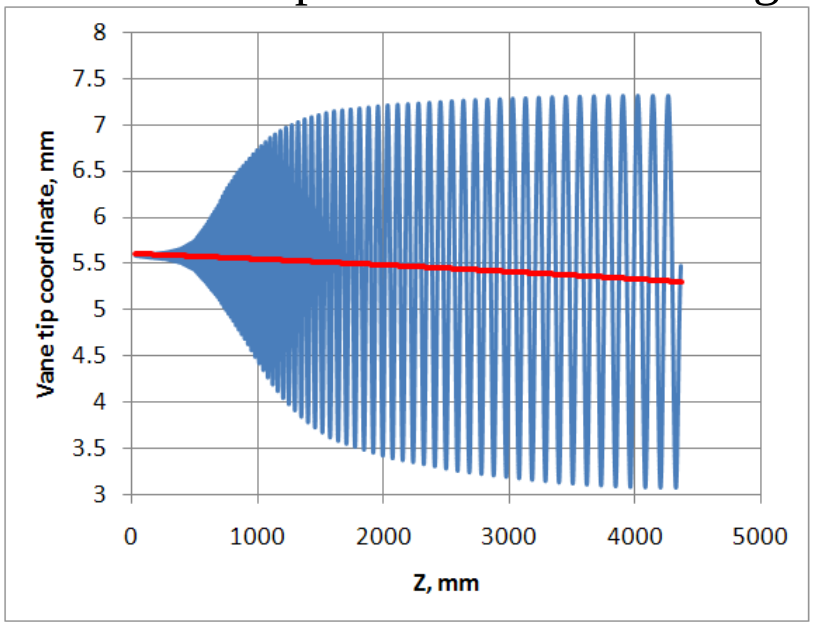

Frequency shift for the modulated cell is +1.2 MHz
Average aperture is not constant: it goes down and smaller by 0.215 mm in cell #170. That makes a frequency lower by ≈ -0.86 MHz.
So, the actual frequency shift in cell #170 will be +0.34 MHz.

QWR re-buncher design

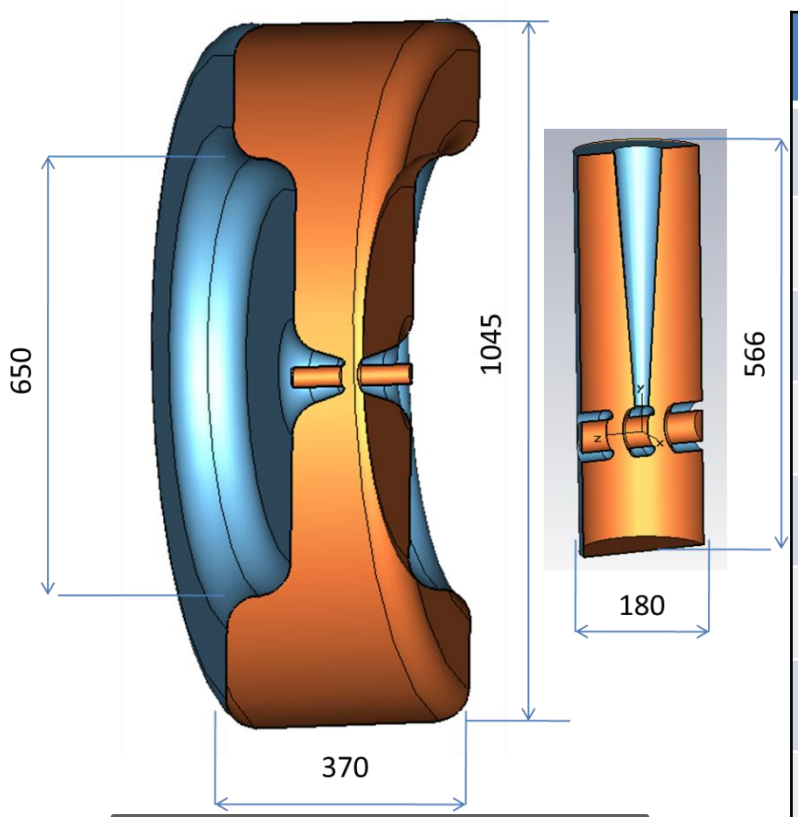

350 MHz pillbox
↓
162.5 MHz pillbox
↓
162.5 MHz QWR

Cavity	Pillbox	QWR
Frequency, MHz	162.52	162.5
Q factor	27250	8668
Aperture radius, mm	15	22
Gap, mm	25	2x25
Particle energy, MeV	2.1	2.1
Effect. shunt impedance, Ohm	2.5e6	3.48e6
Max. energy gain, kV	100	100
Power , kW	3.9	2.88
Max. electric surface field, MV/m	6.9	3.28
Max. power loss density, W/cm^2	---	17.8

Possible mechanical design

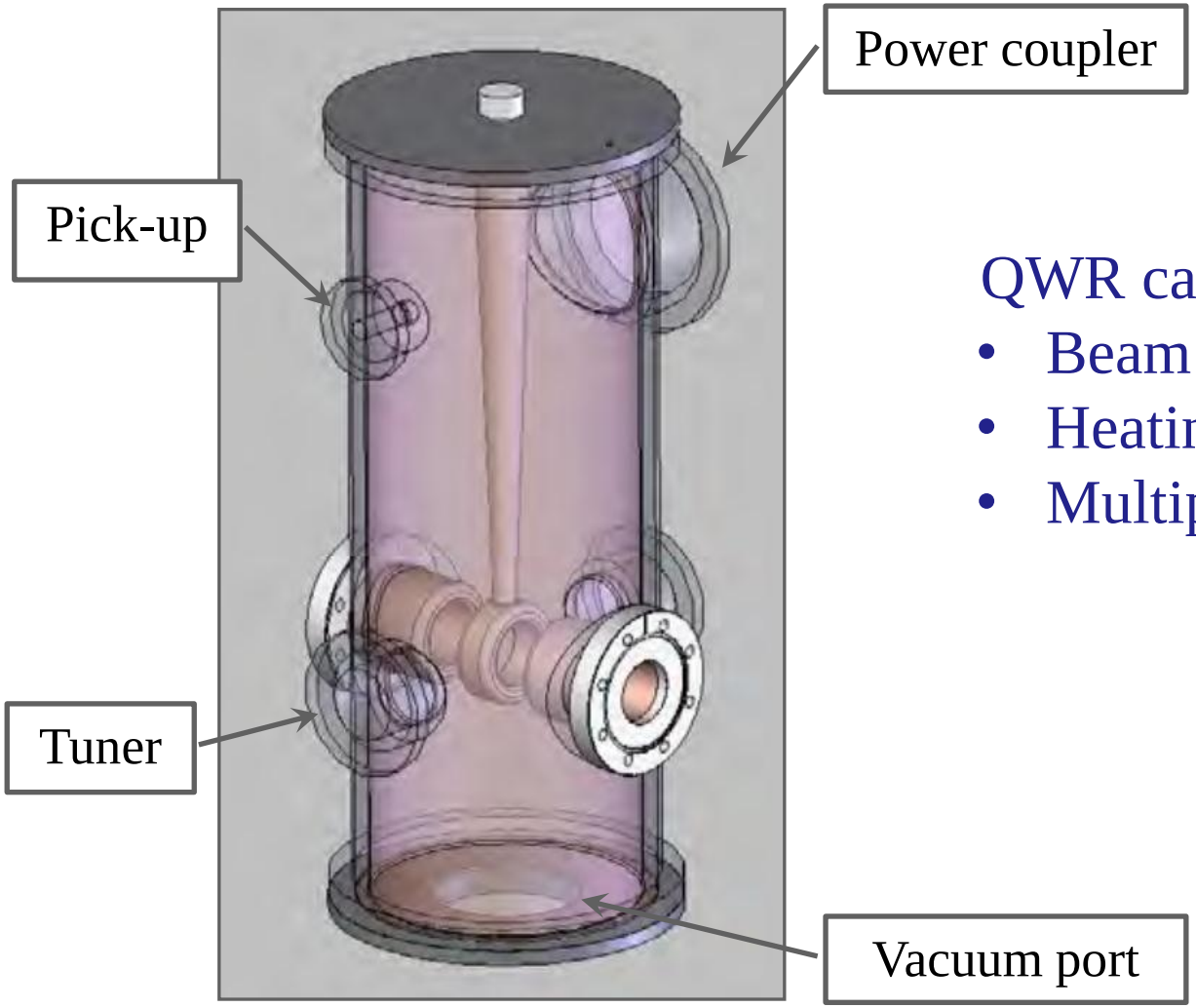

QWR cavity issues:

- Beam steering
- Heating
- Multipactoring

Beam steering

Field distributions in the gap center

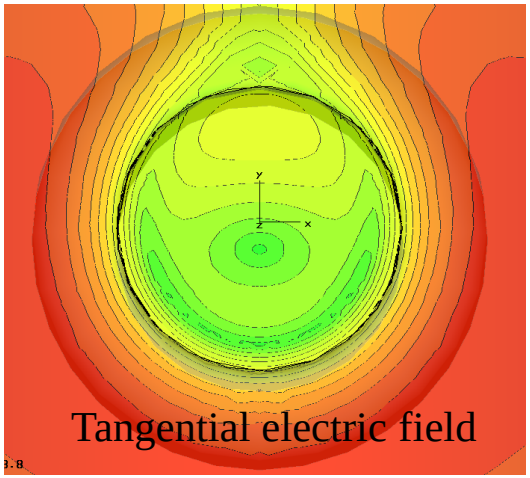

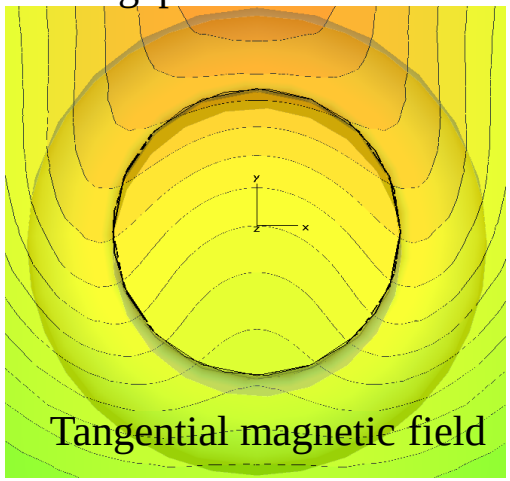

Single particle deflection, $x_0=y_0=0$

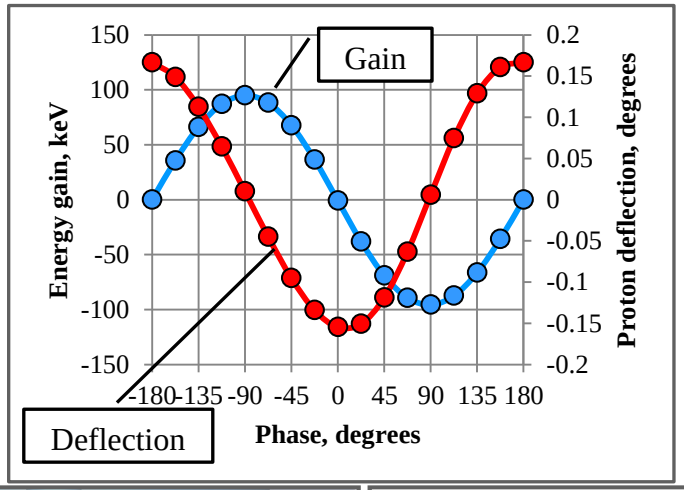

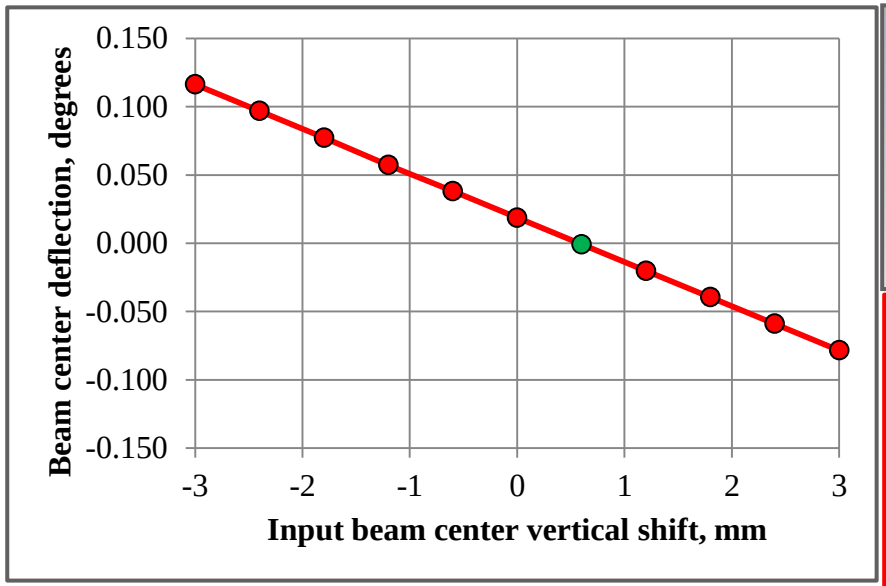

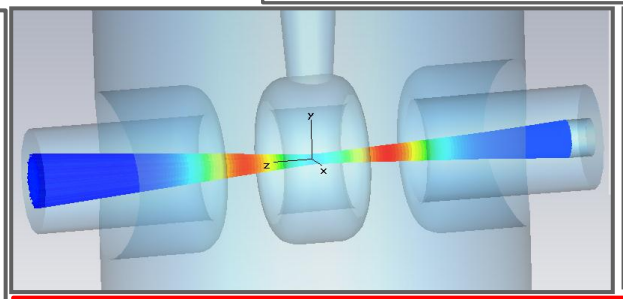

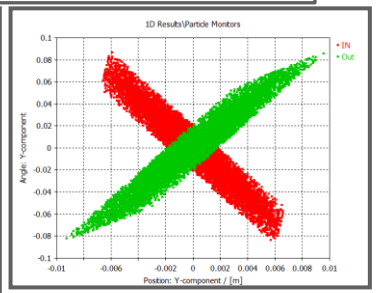

Because of low field, low proton energy and big aperture the steering effect is negligible. No emittance growth is observed. To compensate beam deflection completely the cavity should be shifted down by 0.6 mm.

Multipactoring in QWR re-buncher

Project X

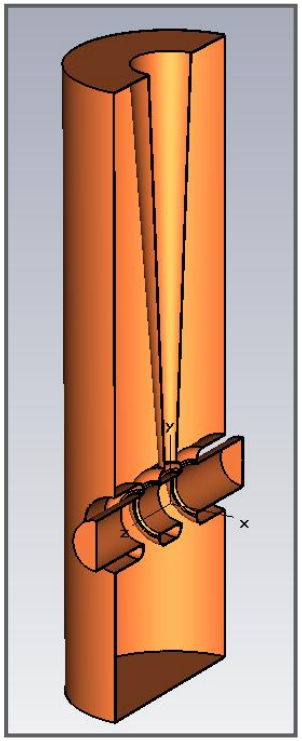

QWR re-buncher copper model

The CST Particle Studio was used to simulate multipactoring in QWR re-buncher. The key features of the CST PS are the advanced probabilistic secondary emission model and the multiparticle tracking.

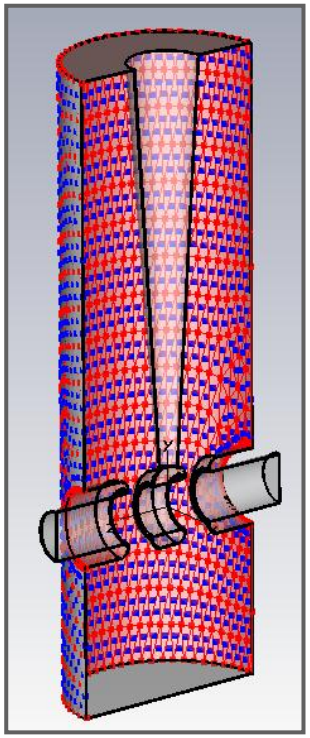

Electron source distribution

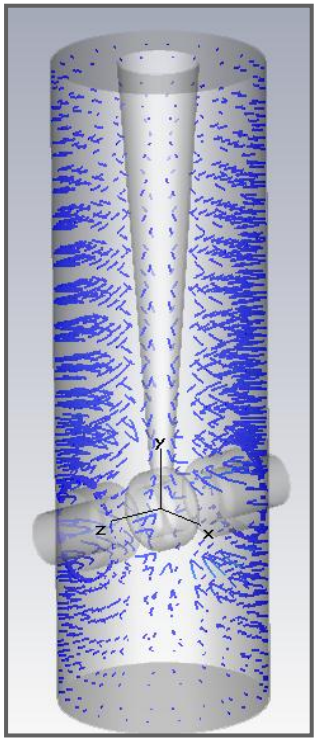

The launched electrons

Now the model has copper walls to assign emission properties. Initial electrons are uniformly distributed over cylinder inner surface. Electron initial energies are uniformly distributed over 0-4 eV interval. No initial angular distribution. Initial number of the electron was 1500-2500 in these simulations. All electrons are launched at the most favorable phase of RF field. The RF field amplitude is scanned to find multipactor zones.

Multipactoring in QWR re-buncher

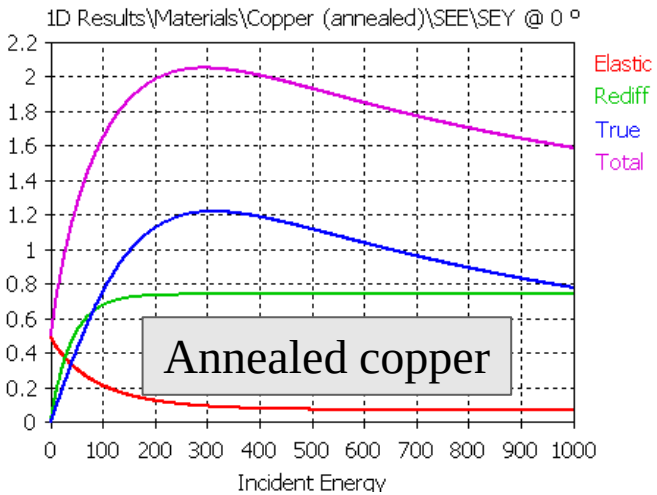

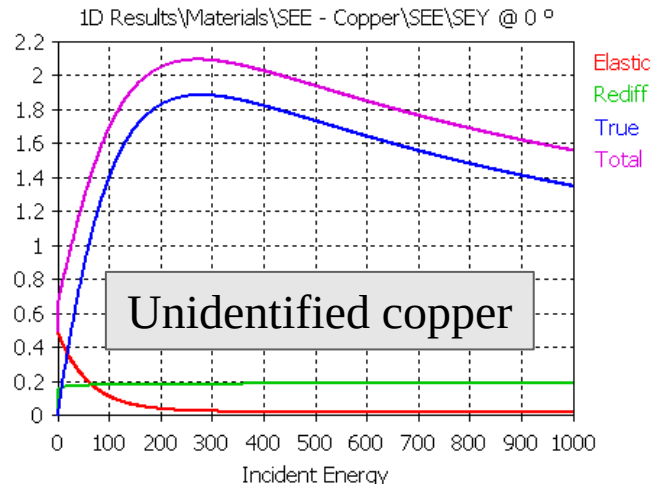

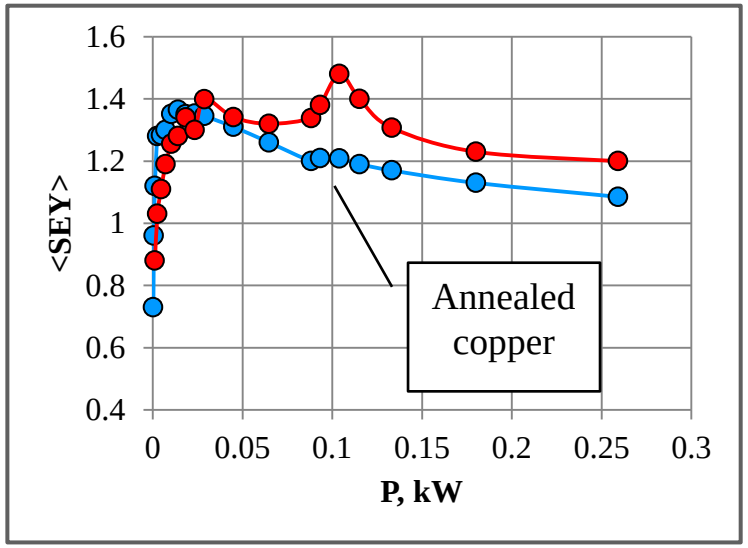

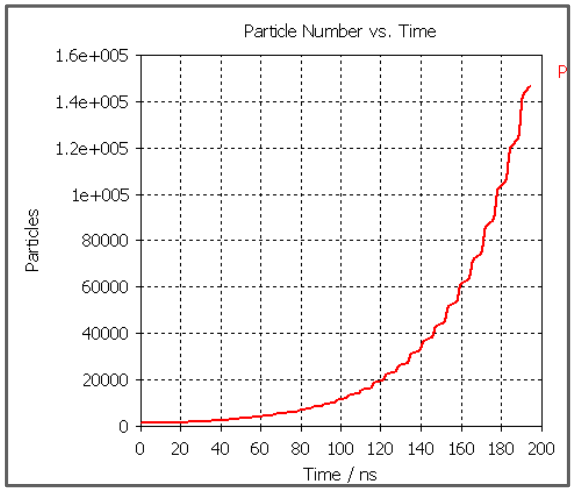

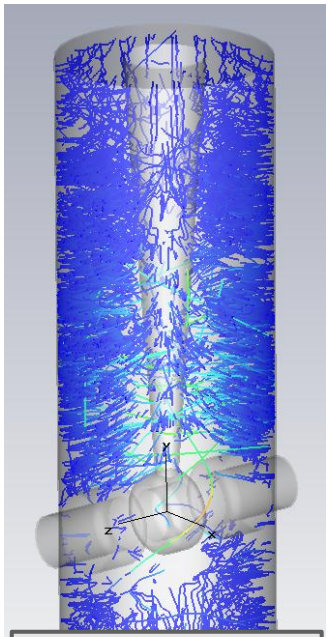

MP is typical for coaxials

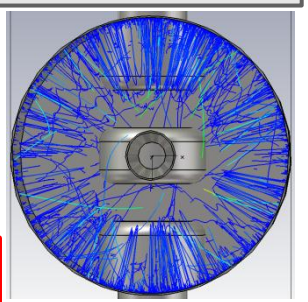

Apparently we will have 1-2 MP barriers in 0-0.15 kW interval

<SEY>=NumberOfSecondaries/NumberOfImpacts

Heating

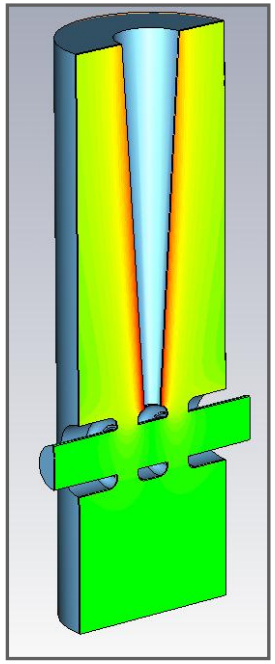

H-field

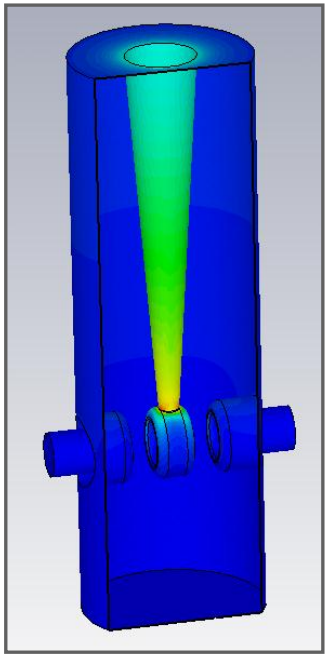

Power loss density

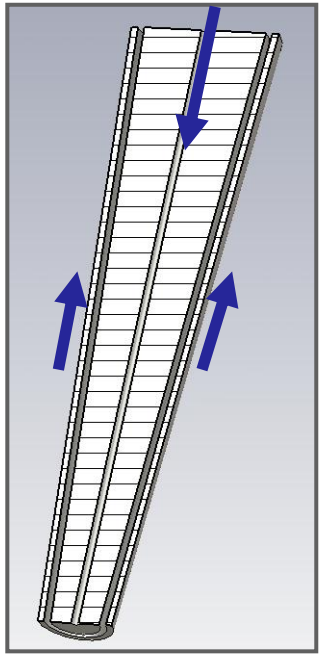

Simplest stem design

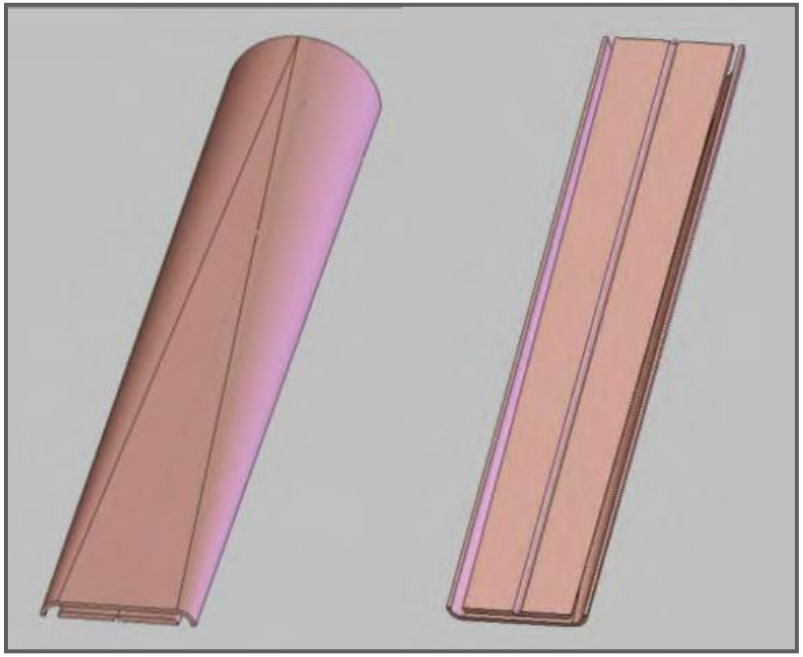

IFMIF proposal. Total power dissipation is higher, but the cross section area available for cooling channels at the bottom is increased.

Most of the RF power is dissipated at the stem with high local power loss density. Therefore, the re-buncher stem cooling design will be the main challenge.

Conclusion

- **The RF simulation of the RFQ delivered useful information on the design issues.**
- **The QWR re-buncher conceptual design was proposed and studied.**
- **Beam steering in the re-buncher is weak and can be easily compensated.**
- **Apparently there will be 1-2 multipactor barriers at low power level.**
- **Thorough thermal analyses is needed to design stem cooling system.**