RF Control Requirements for Project X

Brian Chase

For LLRF Team

Outline

- LLRF Team
- General RF Control Requirements
  - CW Linac
  - Pulsed Linac
- Present LLRF Design
  - Results

FNAL- AD LLRF team

Brian Chase

Barry Barnes

Dan Keplec

Julien Branlard

Philip Varghese

Ed Cullerton

Vitali Tupikov

Paul Joireman

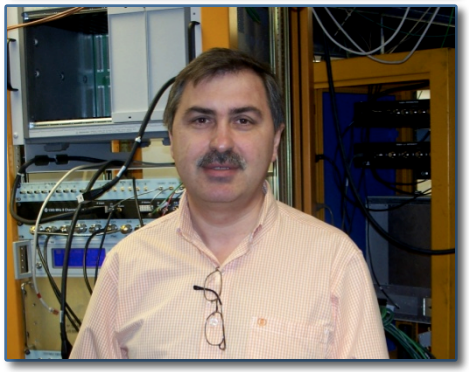

More of the LLRF Collaboration

Computing Division

ESECON Board
System Support
Simulations

Gustavo Cancelo
Ted Zmuda
Ken Treptow

Technical Division

Motorized Tuners
Piezo Tuners
Control Algorithms

Ruben Carcagno
Yuriy Pinschanikov
Warren Schappert

Informal collaborations
ALN, LBNL, JLAB, DESY

India collaboration
In development

LLRF Group's Systems for Fermilab's Accelerators

- LINAC
  - Low Energy: 5 stations
    - 2009 upgrade with MFCs
  - High Energy: 5 stations
- Main injector
  - LLRF and Mid Level RF, Comb Filters in 18 PA stations,
- Tevatron
- Recycler
- e- cool BPM
- Accumulator BPM

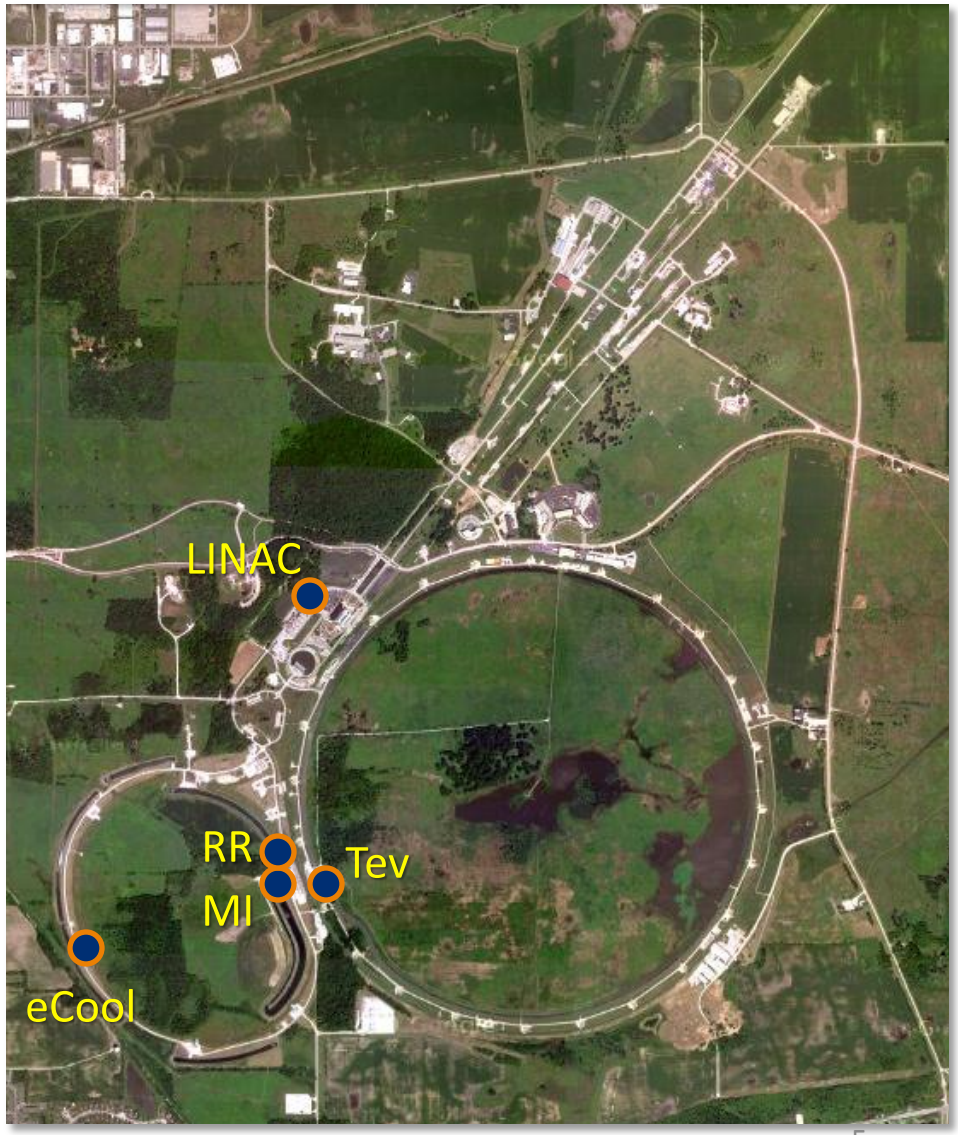

LLRF for Fermilab's test facilities

- New Muon Lab, ILCTA
  - CM1 (8x SRF cavity cryomodule), 2010
  - expandable to 24 cavities (3 cryomodules)
- Capture Cavity 2
  - 1.3 GHz SRF cavity, 2x LLRF systems, 2007-09
- High Intensity Neutrino Source
  - LLRF for 325 MHZ RFQ with beam, 2009
  - LLRF for 325 MHz SRF single spoke resonator, 2010, CW high-Q and pulsed lower-Q
  - Six room temperature cavity linac with ferrite vector modulators, 2011
- Horizontal Test Stand
  - 1.3 GHz and 3.9 GHz SRF cavities, 2007-2011
- A0 photo injector lab
  - 1.3 GHz SRF cavity with gun
  - 3.9 GHz cavity

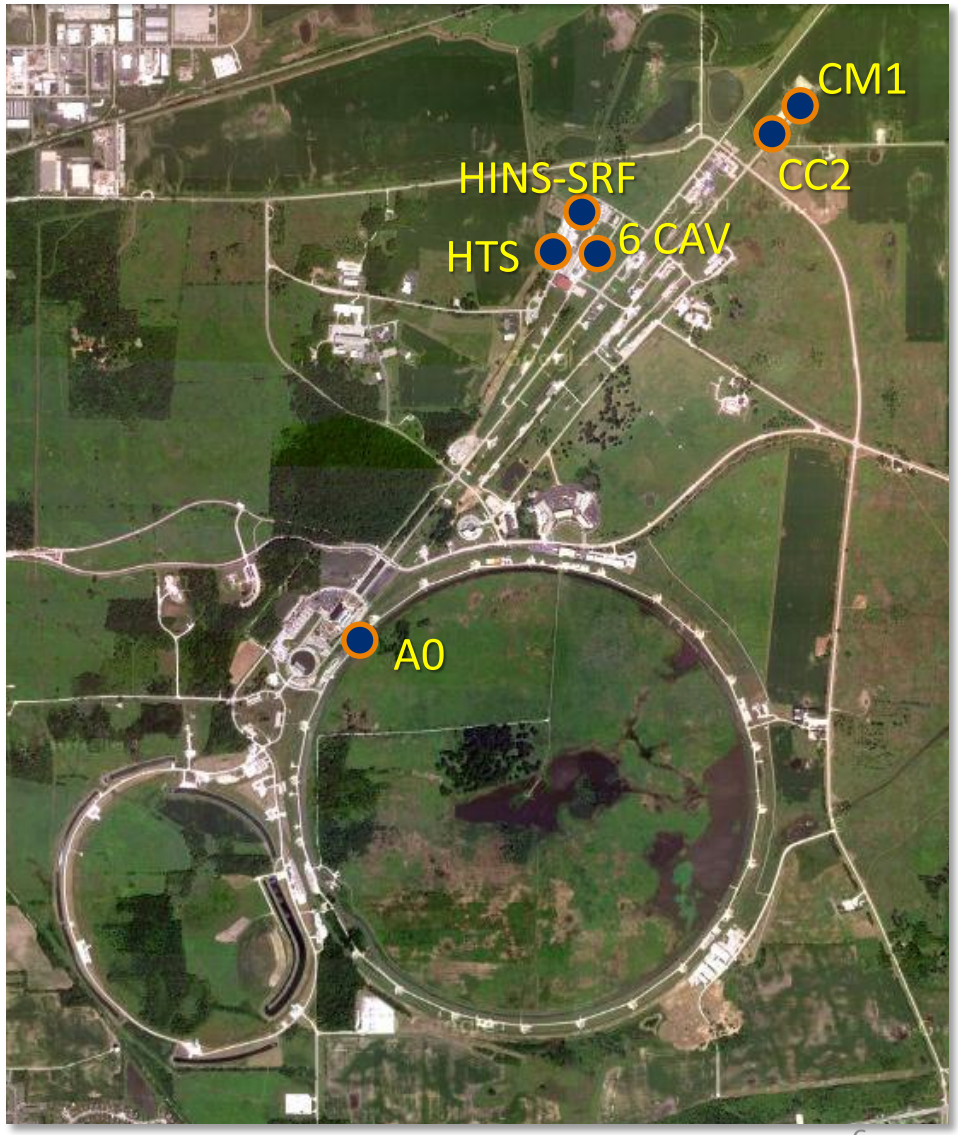

Outline

- LLRF Team
- General RF Control Requirements
  - CW Linac
  - Pulsed Linac
- Present LLRF Design
  - Results

Pulsed LLRF for Two Cryomodules

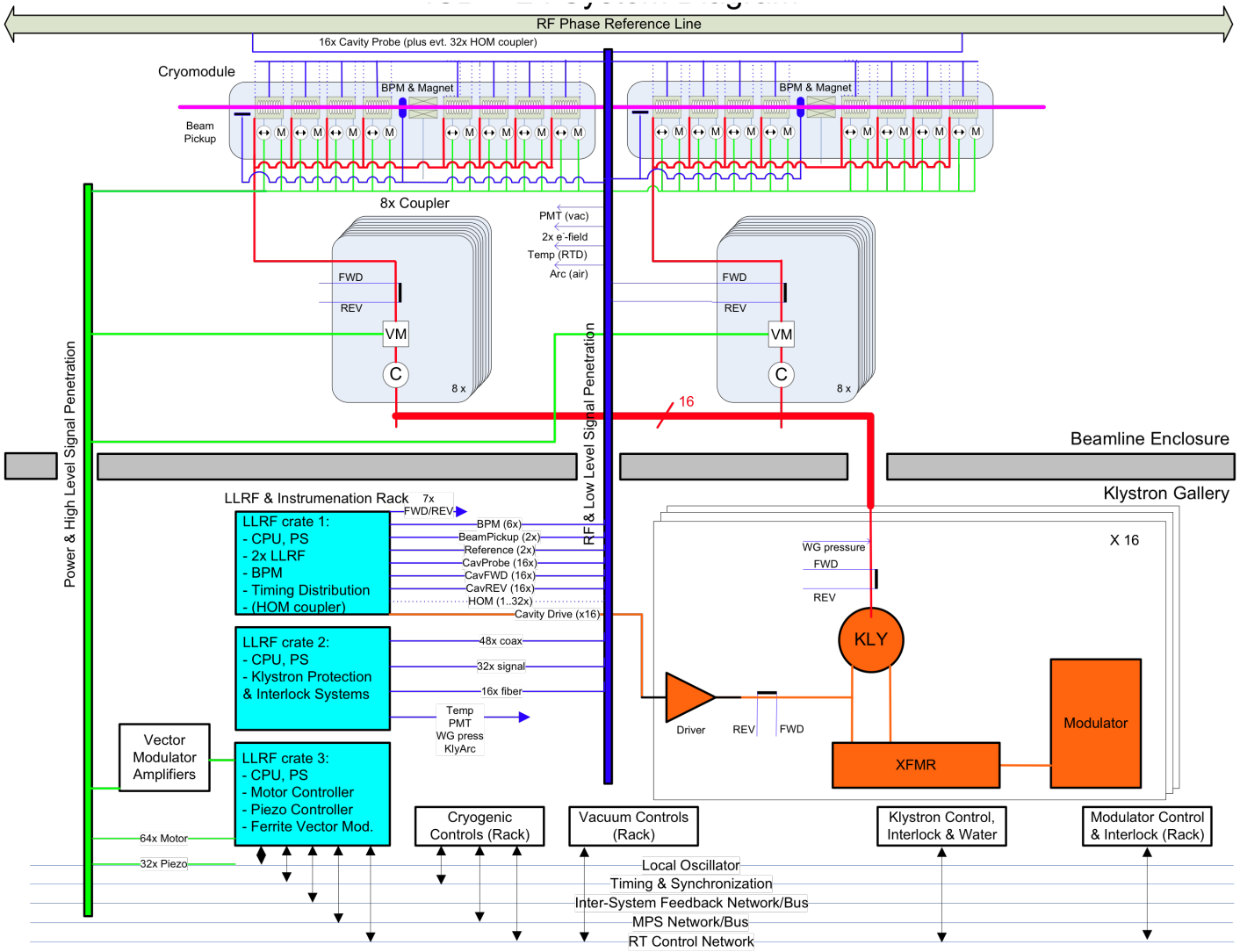

Power Requirements by Cavity Type

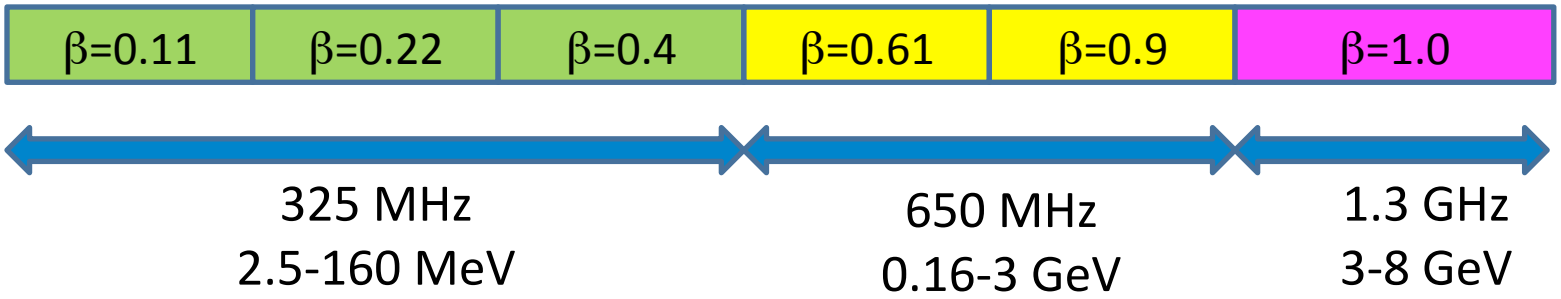

$$P = \frac{V^2}{4Q_{ext}(r/Q)}\left[\left(1+\frac{I\cos\varphi(r/Q)Q_{ext}}{V}\right)^2 + \left(Q_{ext}\frac{2\delta f}{f}\right)^2\right]$$

Section	Freq, MHz	Energy, MeV	Cav/CM	Max gain per cavity (MeV)	RF PA power with overhead (kW)
RFQ	162.5	2.5	1	2.5	100 to 150
SSR0 (β_G =0.11)	325	2.5-10	18/1	0.844	1.2 to 1.5
SSR1(β_G =0.20)	325	10-42	20/2	2.04	2.9 to 3.3
SSR2(β_G =0.40)	325	42-159	40/4	3.32	4.5 to 5.5
LB 650(β_G=0.61)	650	159-457	36/6	11.6	15.5 to 25
HB 650(β_G=0.90)	650	457-3000	160/20	17.7	23 to 27
Pulsed 1.3(β_G=1)	1300	3000-8000	224/28	25	40/640 to 50/800

PA power is topic for discussion

RF Field Error Budget

Physics Requirements are 1%, 1 deg RMS uncorrelated error

- Error terms (RMS) < 1s*
  - Residual controller error (0.05 %, 0.05 deg)
    - Measured at NML (0.015 %, 0.017 deg)
  - Receiver noise (0.02 %, 0.02 deg)
    - Measured at NML (0.009%, 0.005 deg)
  - Reference system noise between RF frequency sections (0.01 %, 0.01 deg)
    - Calculated (0.001 deg)
  - Master Oscillator phase noise 100 Hz to 100kHz @1.3GHz (.005 deg)
    - Measured (.0023 deg)
  - Power Amplifier spurs in CW linac (-55 dBc?)
  - Line generated modulation is coherent across accelerator,
  - Beam loading modulation 100% (peak 0.3%, 0.3 deg)

- Error terms > 1s **B**eam **A**rrival **T**ime monitors reduce LLRF long term requirements
  - Beam based calibration error (1%,1 deg peak?)
    Amplitude dependence on R/Q
  - Cable and Receiver drifts (0.3 deg)
    - Measured at NML (0.125 deg P over 1 week)
  - Phase Reference system drifts (0.1 deg)
    - Measured in lab (< 0.1 deg)

*Measurements made with 500kHz BW, 1.3GHz, Q=3E6, proportional gain = 128, integral gain = 2E6

RF Power/Microphonics Design Approach

- Resonance Control working group tasked with developing a plan forward
  - Push all microphonic disturbances down
    - dP - Cryogenics
    - dF/dP – Cavity design
  - Allow for realistic levels of LFD compensation but attempt to not be dependent on it
  - Where costs of RF power are low, lower the Q as much as is reasonable (325 MHz)
  - The high beta 650 MHz cavities make up the bulk of the CW linac (18x - this should be our main focus for now)
    - Efficiency is a bigger issue

Please see Microphonic talk by Yuriy Pischainikov in Cavity WG

SSR1 with Narrow Bandwidth Coupler

- Initial cold tests of SSR1 using CW provided an opportunity to gain experience with a very narrow bandwidth cavity
  - Test Conditions
    - 4.5K
    - Cavity bandwidth of about 1.5 Hz
    - df/dP ~= **140 Hz/torr**
    - dP_{PTP}~=**5 torr**
    - LLRF tracking resonant frequency of cavity
  - Detuning control system
    - 100 kHz digitizer measured RF frequency offset from an arbitrary set point
    - FPGA fed Δf back to fast tuner
- Reduced pressure related variations in cavity frequency from several hundreds Hz to

Δf <= 1.3 Hz RMS

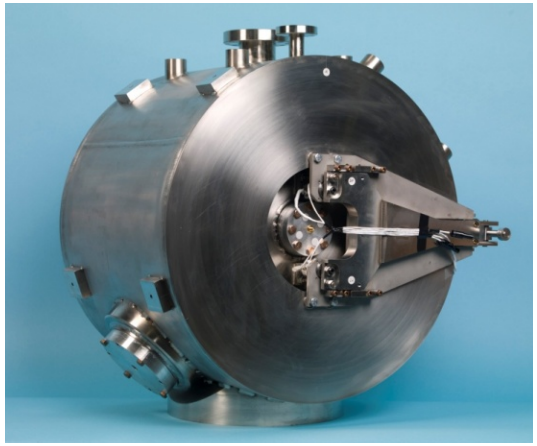

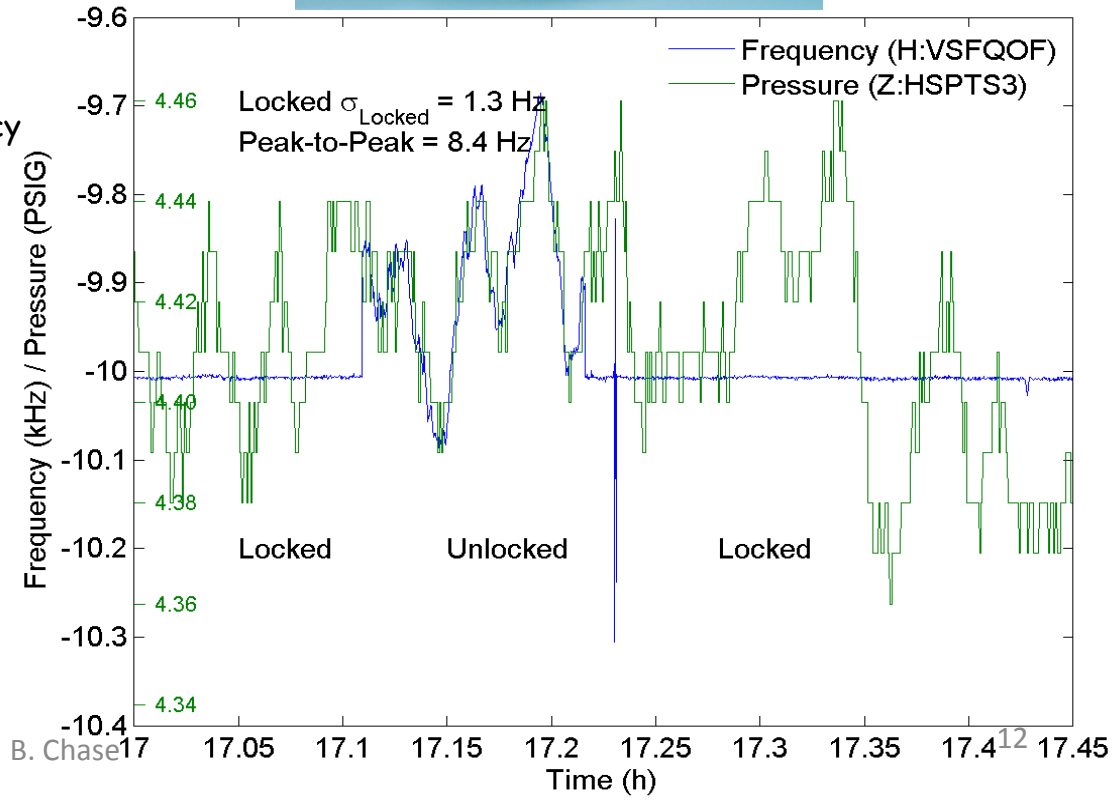

Slow fill
Long pulse
Phase track off

4 ms fill
13 ms flattop
Phase tracking on
Q_l = 1e7

Cavity phase rolls away from drive vector during fill.

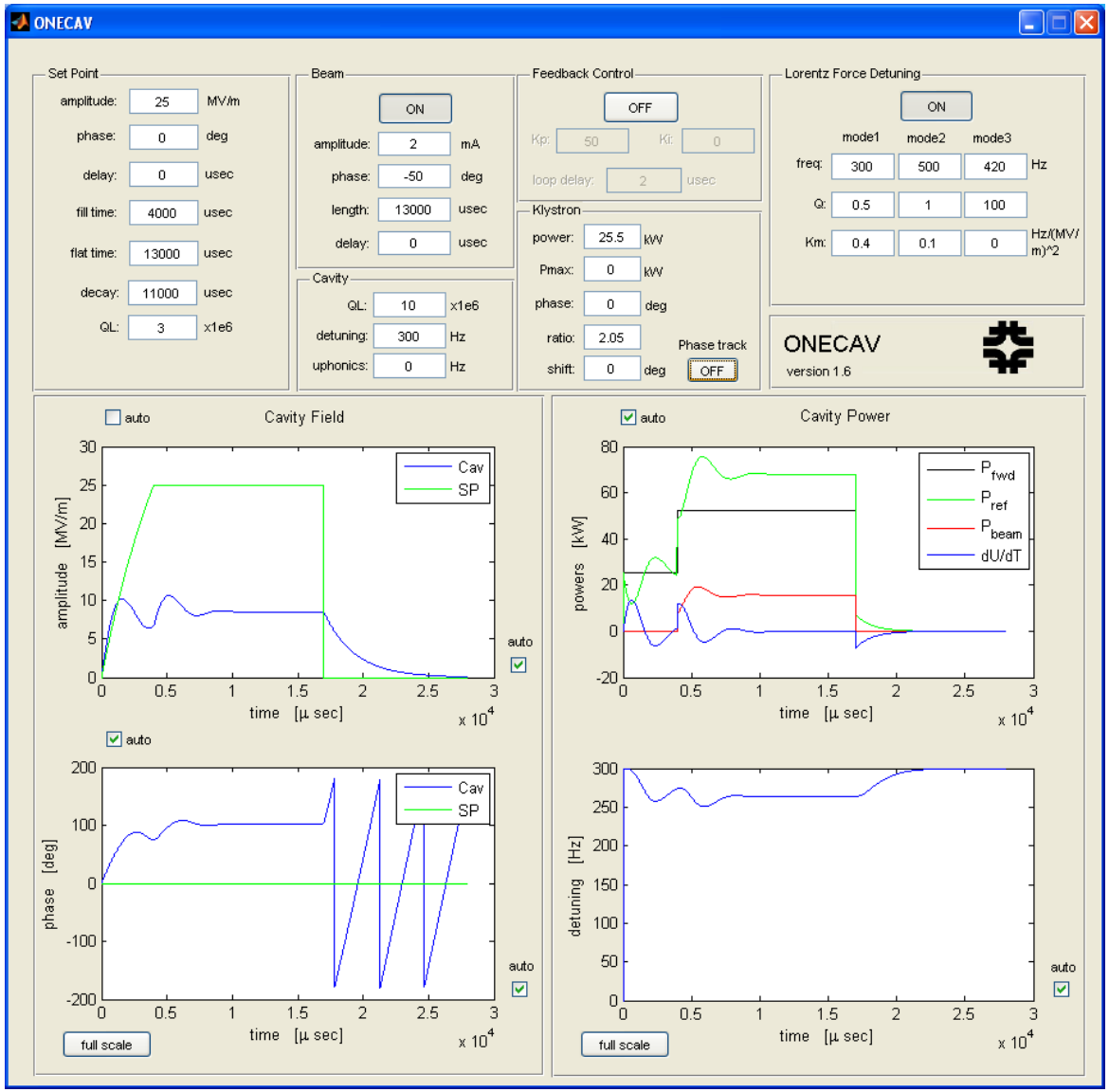

Slow fill
Long pulse
Phase track on

1mA
4 ms fill
13 ms flattop
Phase tracking on
Q_l = 1e7
32kW

Phase trajectory programming with a slow fill allows cavity to detune without ringing

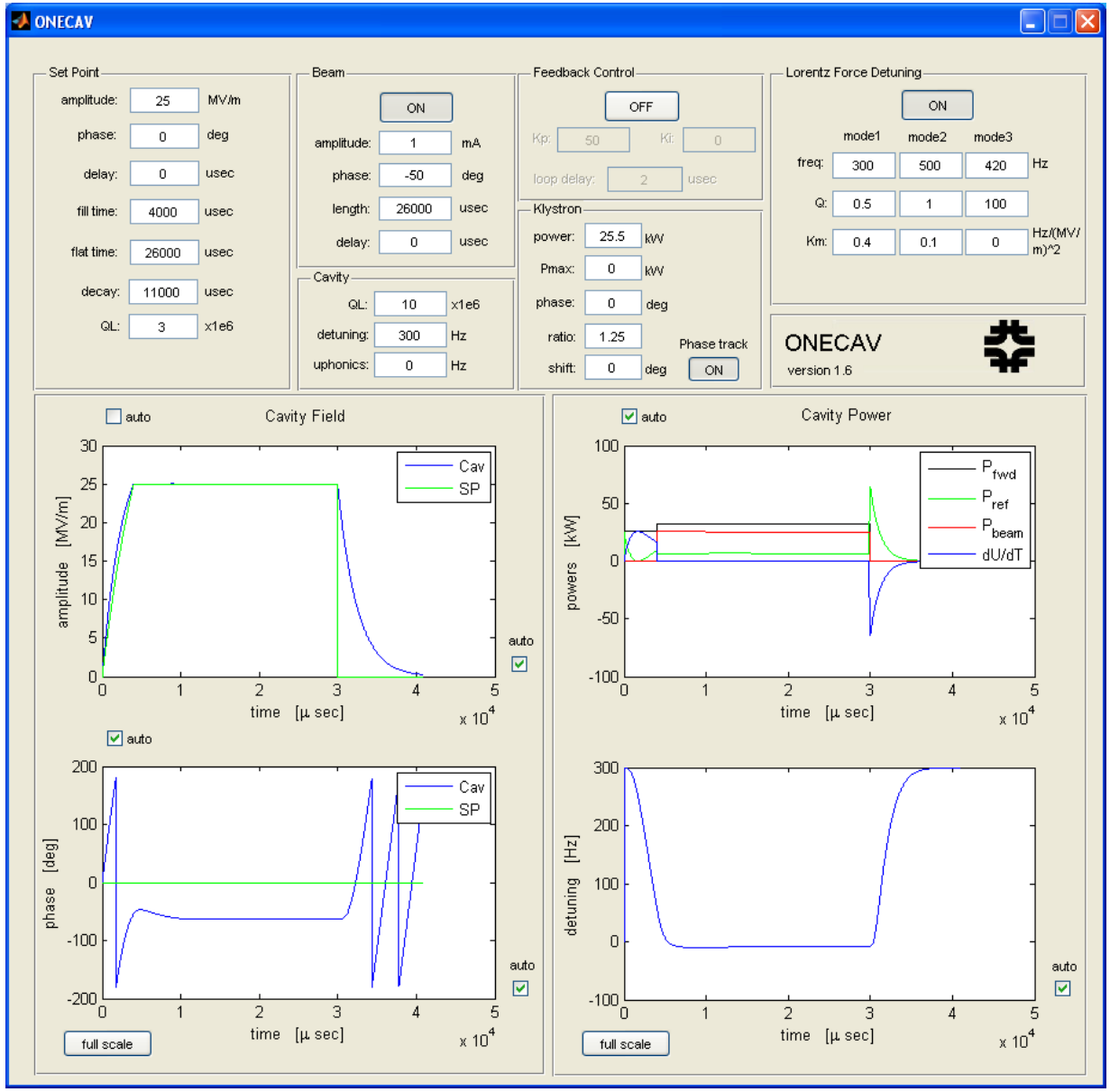

Master Oscillator and Phase Reference Line

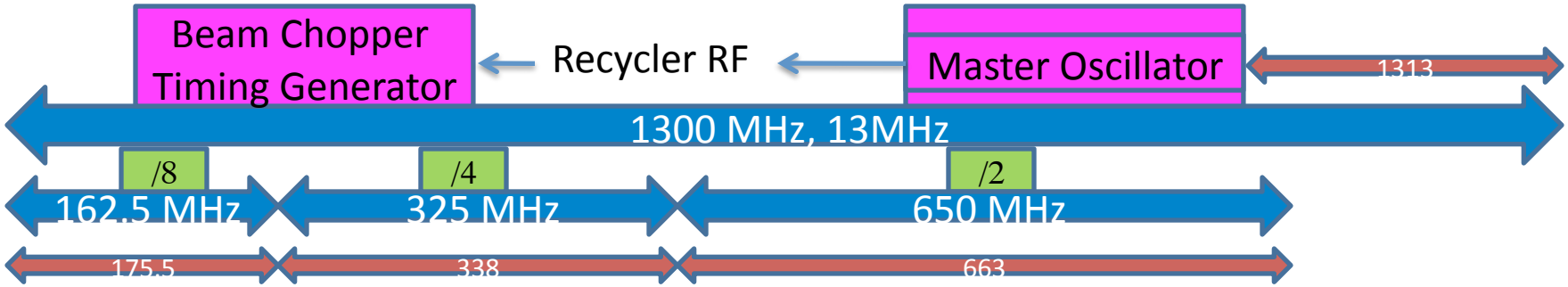

- Master Oscillator Output Frequencies

Reference	LO
1300.00 MHz	1313.00 MHz
650.00 MHz	663 MHz
325.00 MHz	338 MHz
162.50 MHz	175.5 MHz

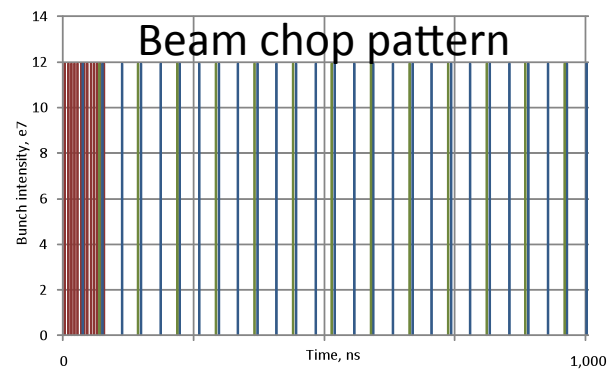

- Phase drift between outputs < 250 fs
- Integrated phase noise 100Hz to 100kHz @ 1.3 GHz < 60fs
- All outputs 10dBm
- Allow for main 1300 MHz drive amp to be inside PLL circuit

8 Ch Receiver/Tx Specifications

RF Frequencies	162.5,325,650,1300 MHz
IF Frequency	13.0 MHz
Channel isolation	>80dBc
Input Receiver power	10dBm F.S.
Receiver IF output	6dBm F.S.
Receiver notch	26 MHz
Integrated Phase Noise	~2 fs
Transmitter inputs	13 MHz I-Q, 0 dBm
RF inhibit gate isolation	40dB
Transmitter output	RF frequencies at +13dBm

For Beam Simulations
see Gustavo Cancelo's talk later today

- Many simulation efforts in progress
  - Single cavity RF
  - Multicavity RF
  - Main Linac, starting with 3 to 8 GeV section

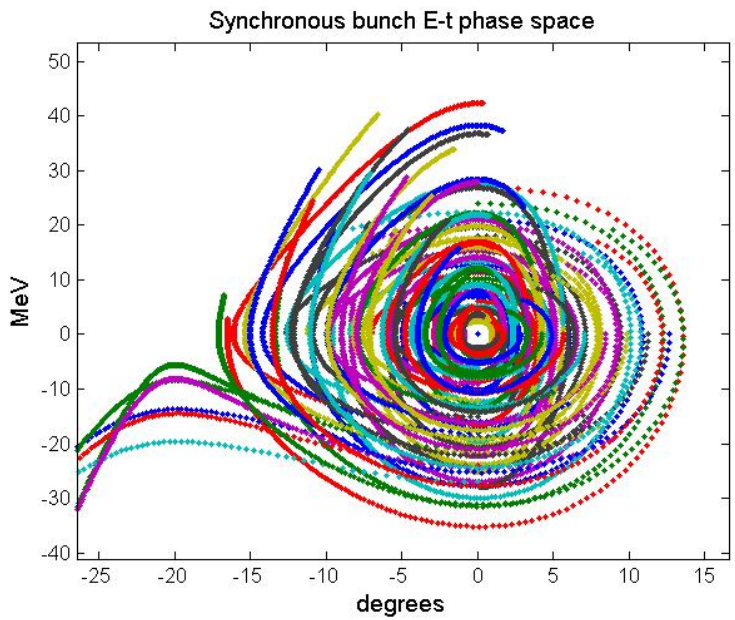

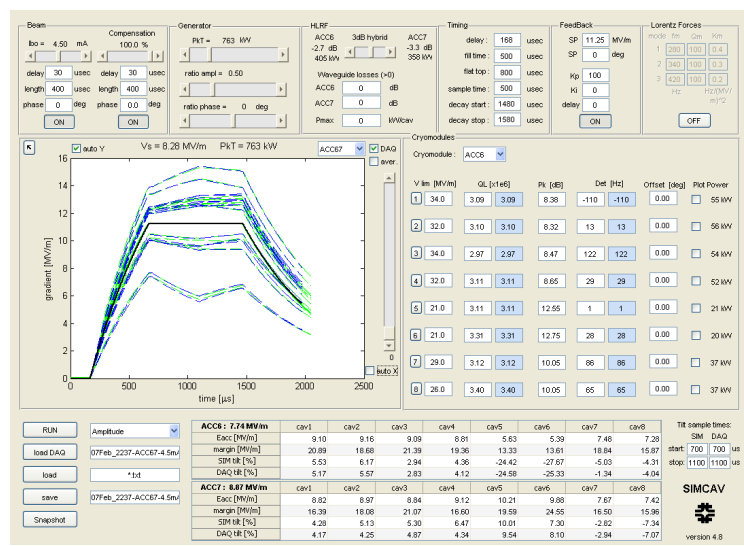

100% Beam Current Modulation
Knowledge of structure allows Feedforward Correction

- Linac beam current has a periodic time structure (at 10 Hz) with two major components.

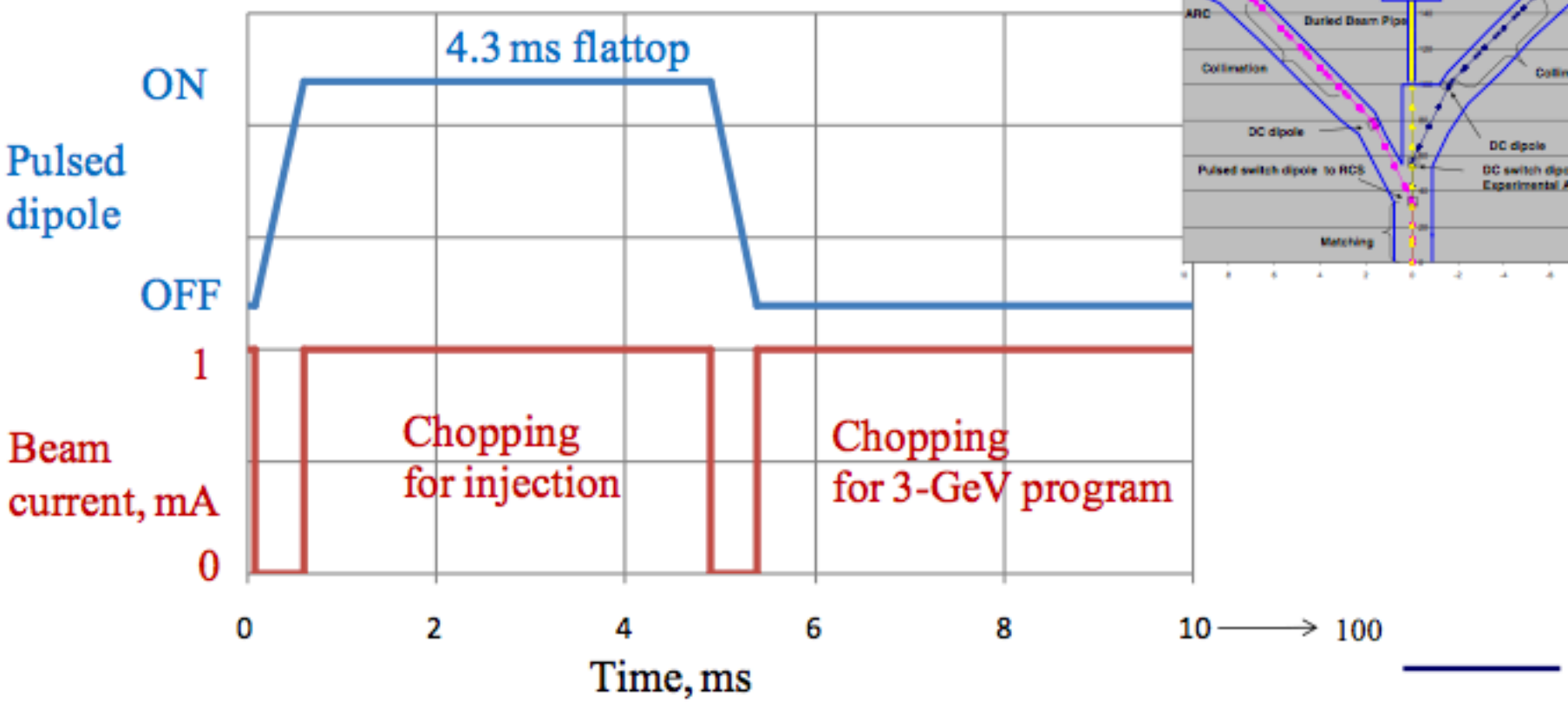

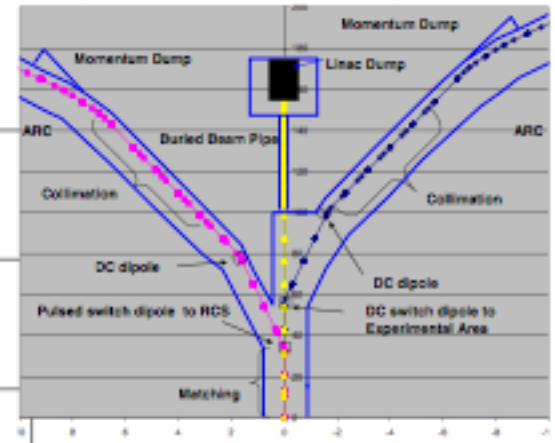

Outline

- LLRF Team
- General RF Control Requirements
  - CW Linac
  - Pulsed Linac
- Present LLRF Design
  - Results

NML CM1 LLRF Racks

Receivers and Up-converters

VXI CPU &
3 R3MFC Controllers

Master Oscillator

Power Supplies

Master Oscillator

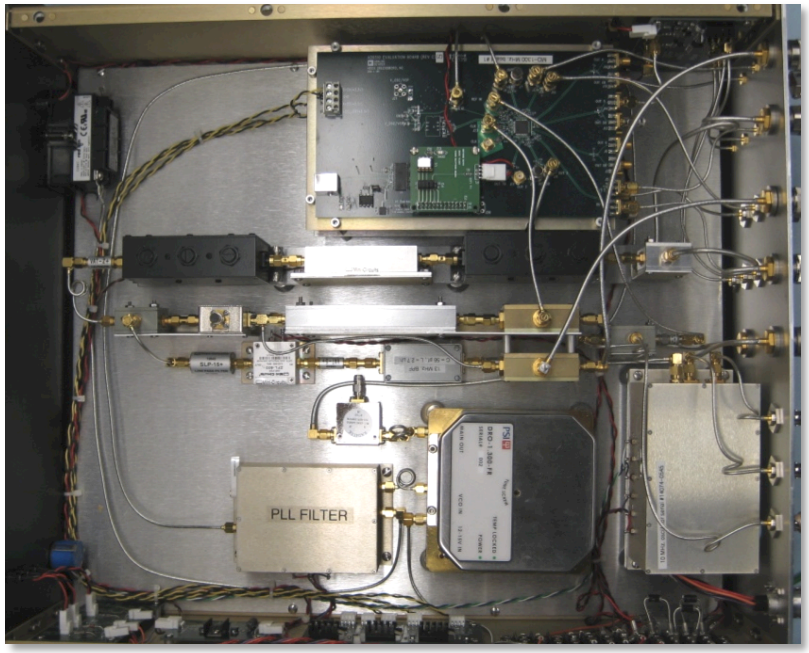

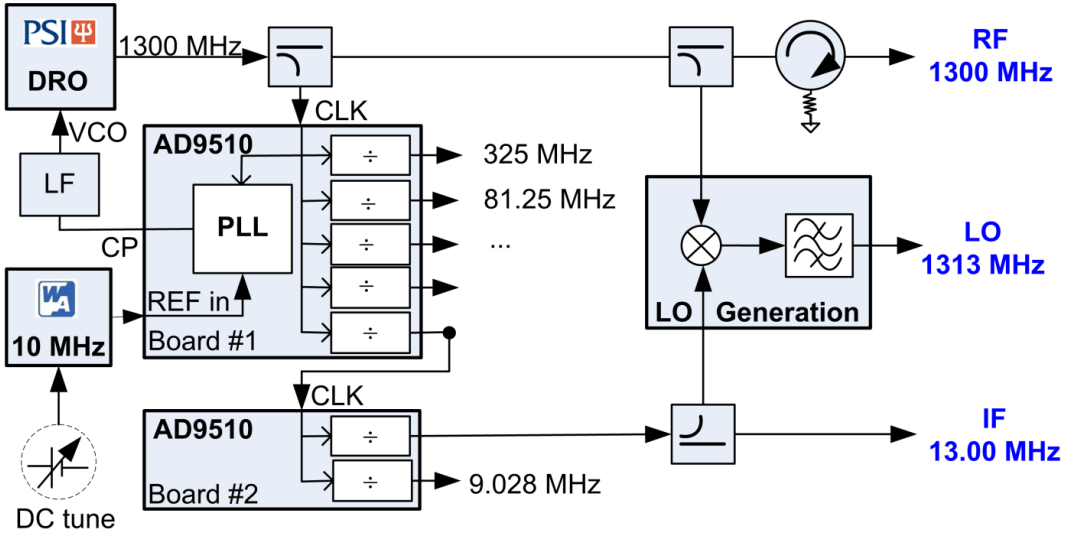

1.3 GHz Master Oscillator

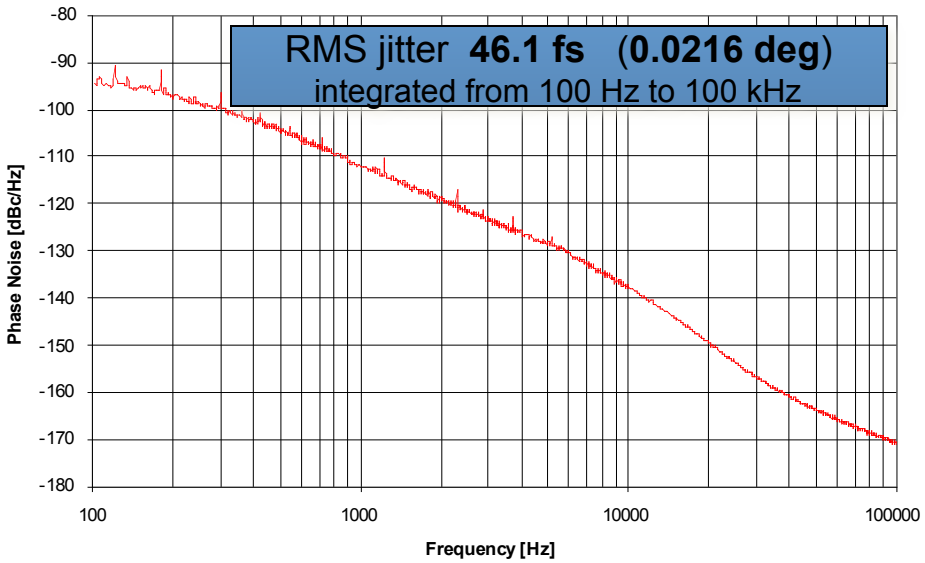

- RF, LO, IF
- Programmable outputs
- Timing reference
- 1.3 GHz
- <140 fs integrated jitter (1Hz–10MHz)

33 Channel Controller (MFC)

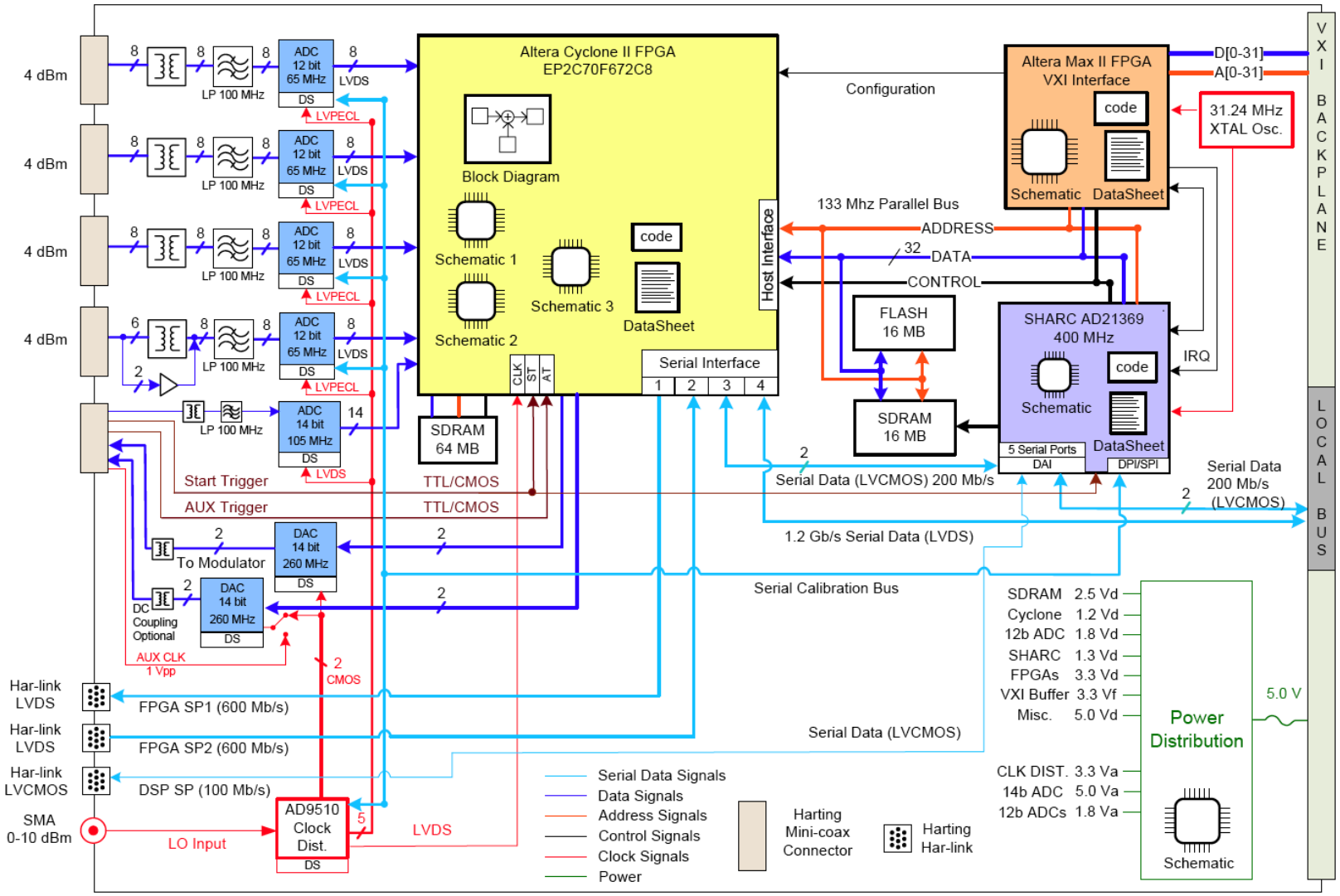

R3-MFC Circuit Board

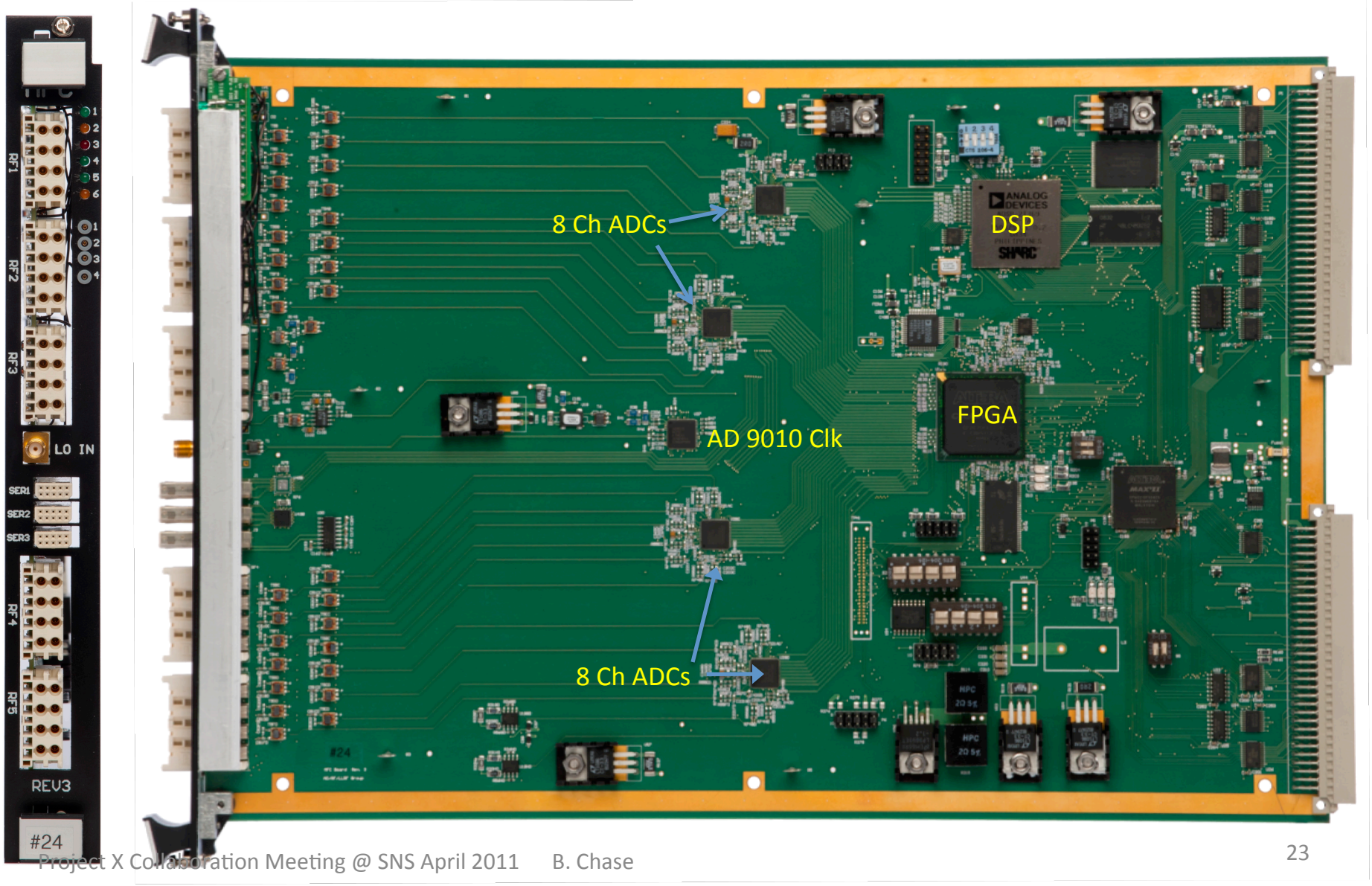

DIRECT RF CONTROL SYSTEM FPGA FOR HINS / NML PROJECTS

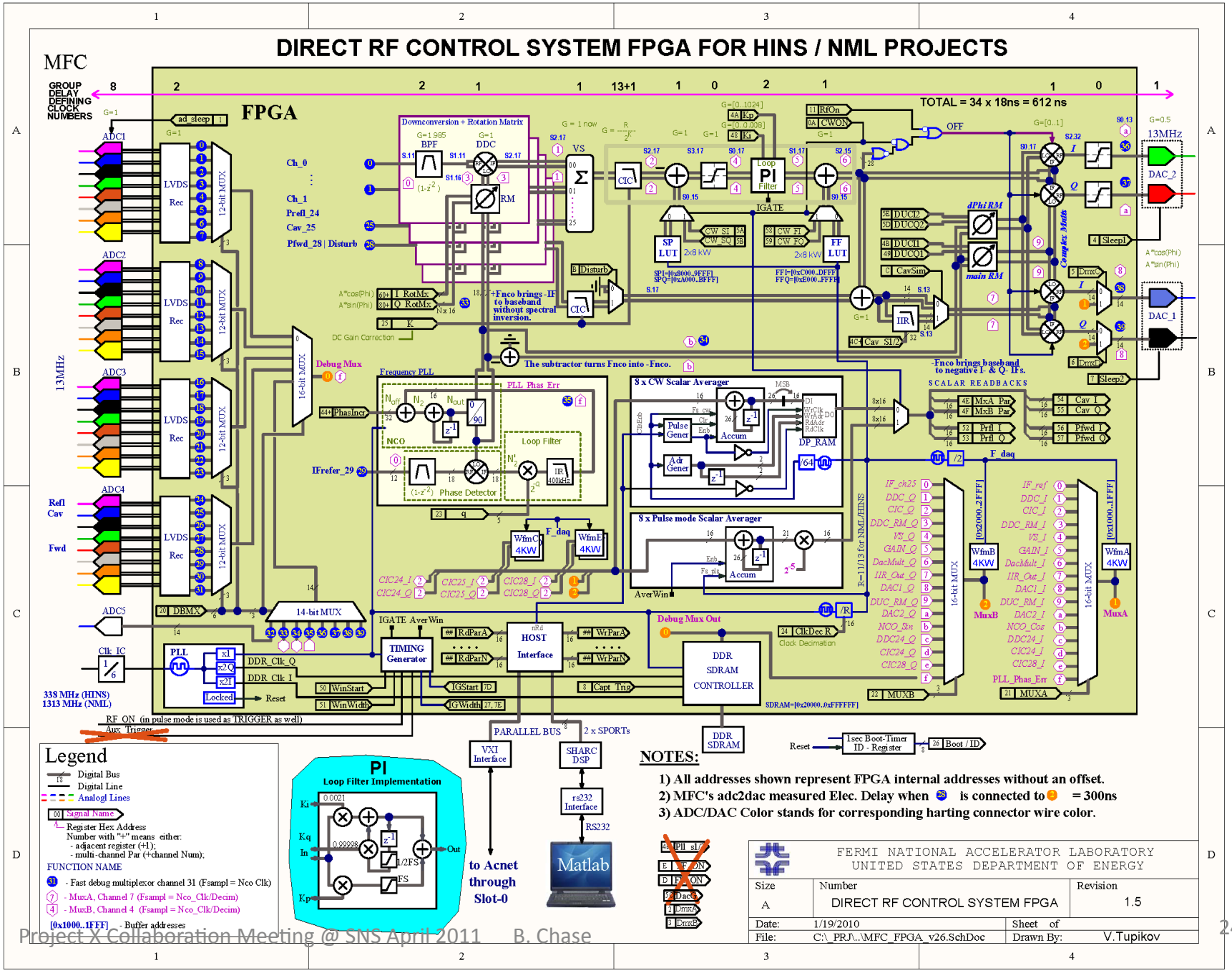

Firmware – DAQ
Flexible and Programmable

		Rate D		
NML	1313/21	60	1.04	2.08
HINS	338/6	52	1.08	2.16

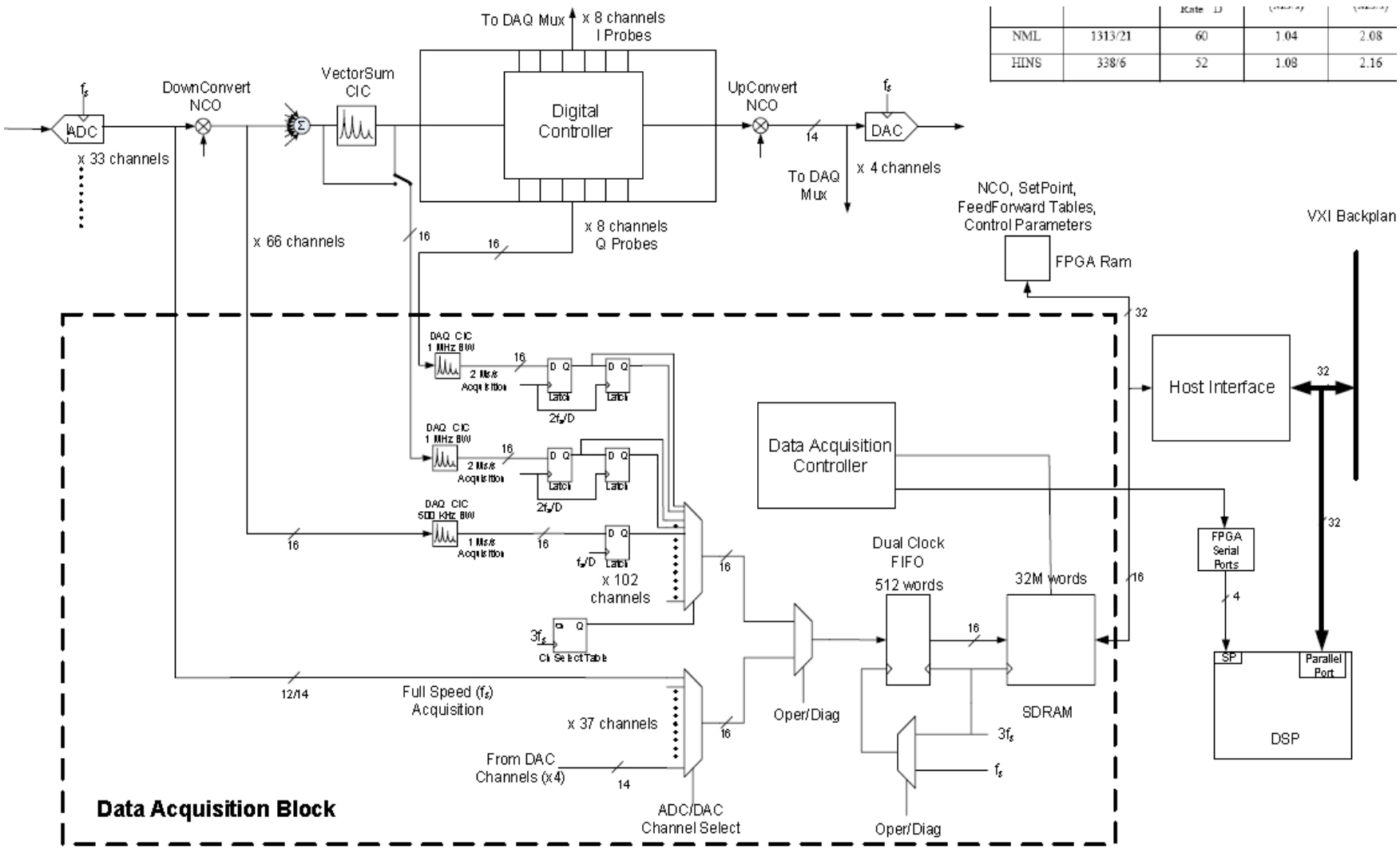

LLRF Data Flow Diagram

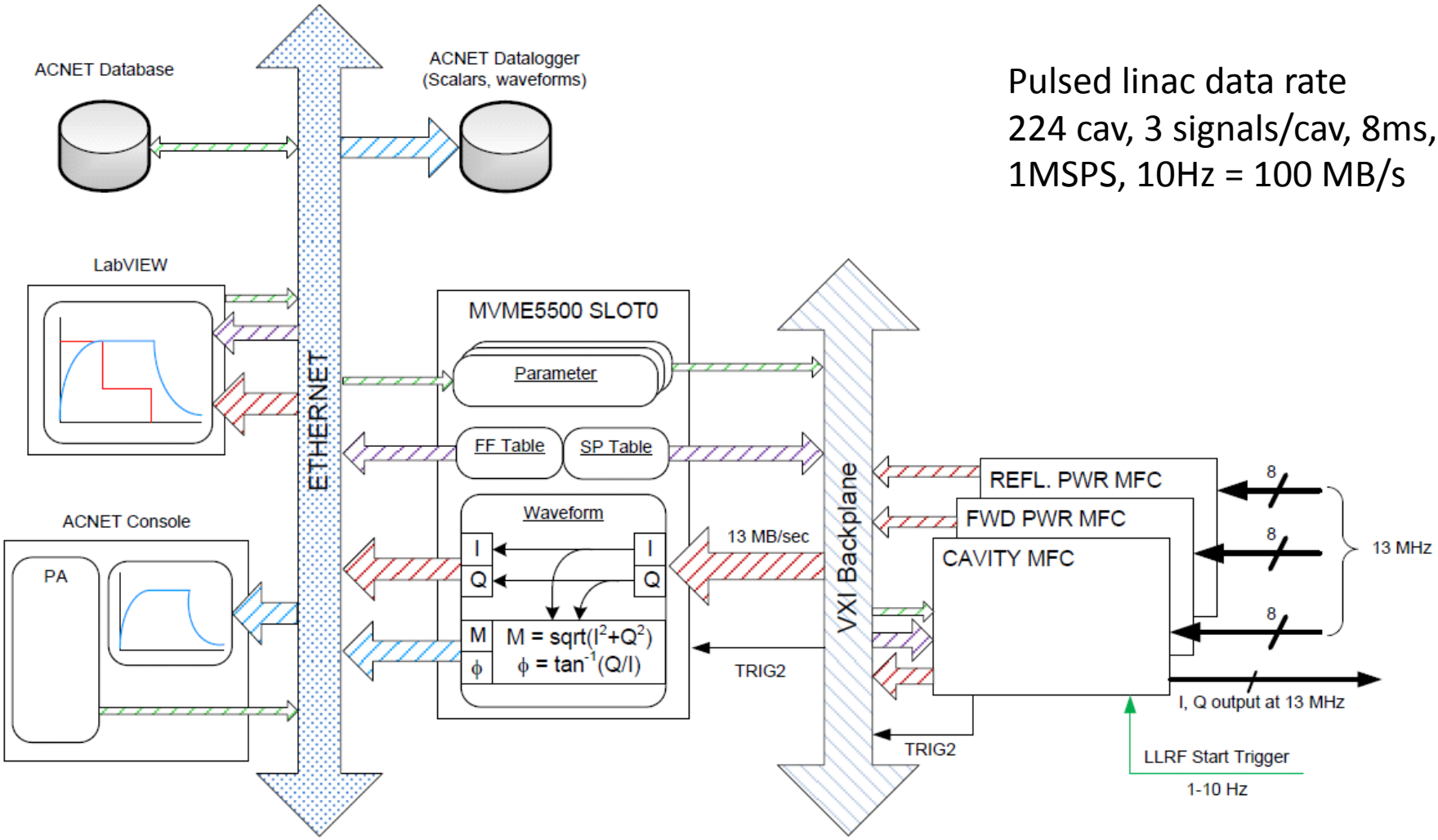

Pulsed linac data rate
224 cav, 3 signals/cav, 8ms,
1MSPS, 10Hz = 100 MB/s

LabView Operator Interface

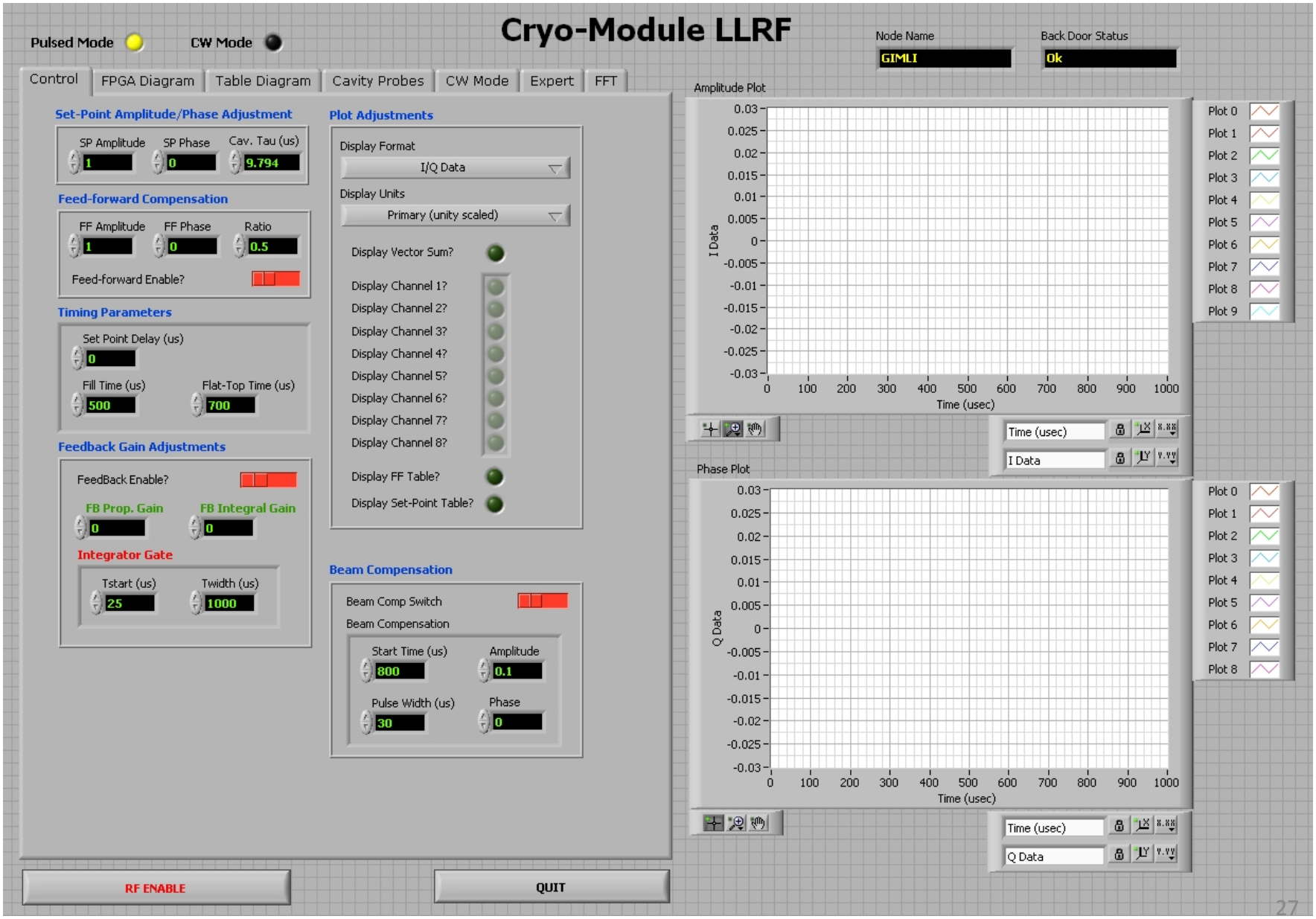

Individual Cavity and FFT Display

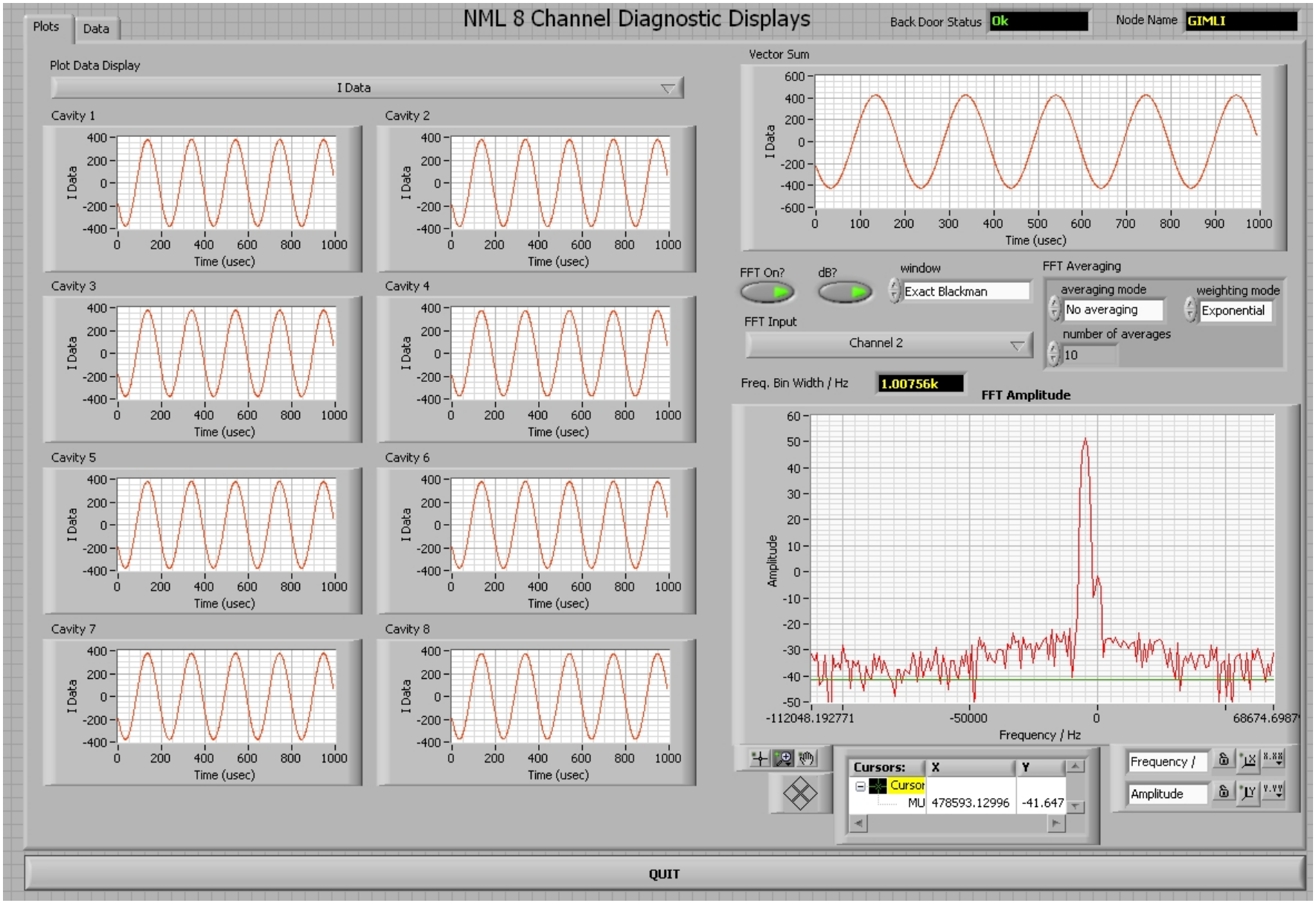

Amplitude waveform Under Regulation

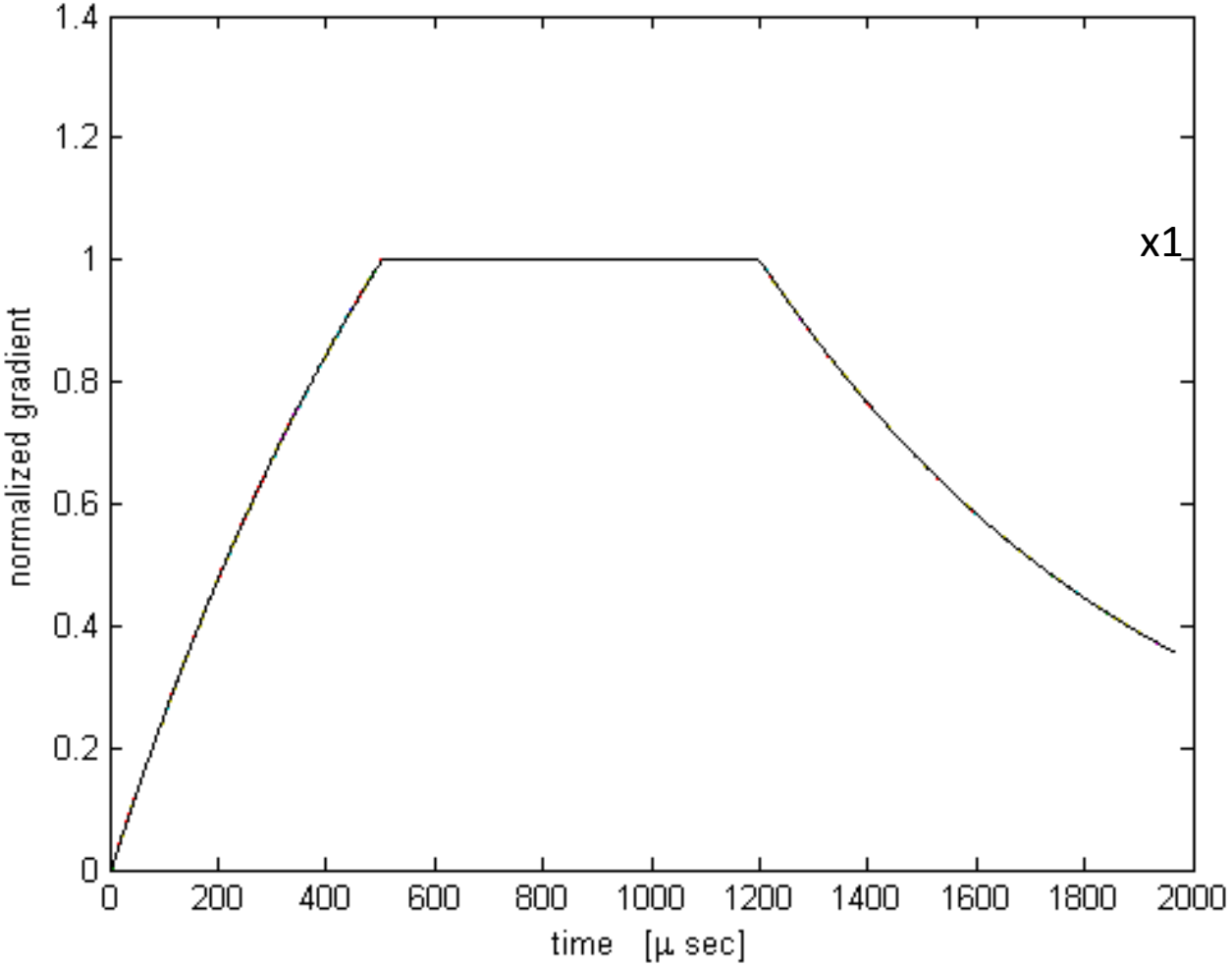

Zooming on the flat top regulation x10

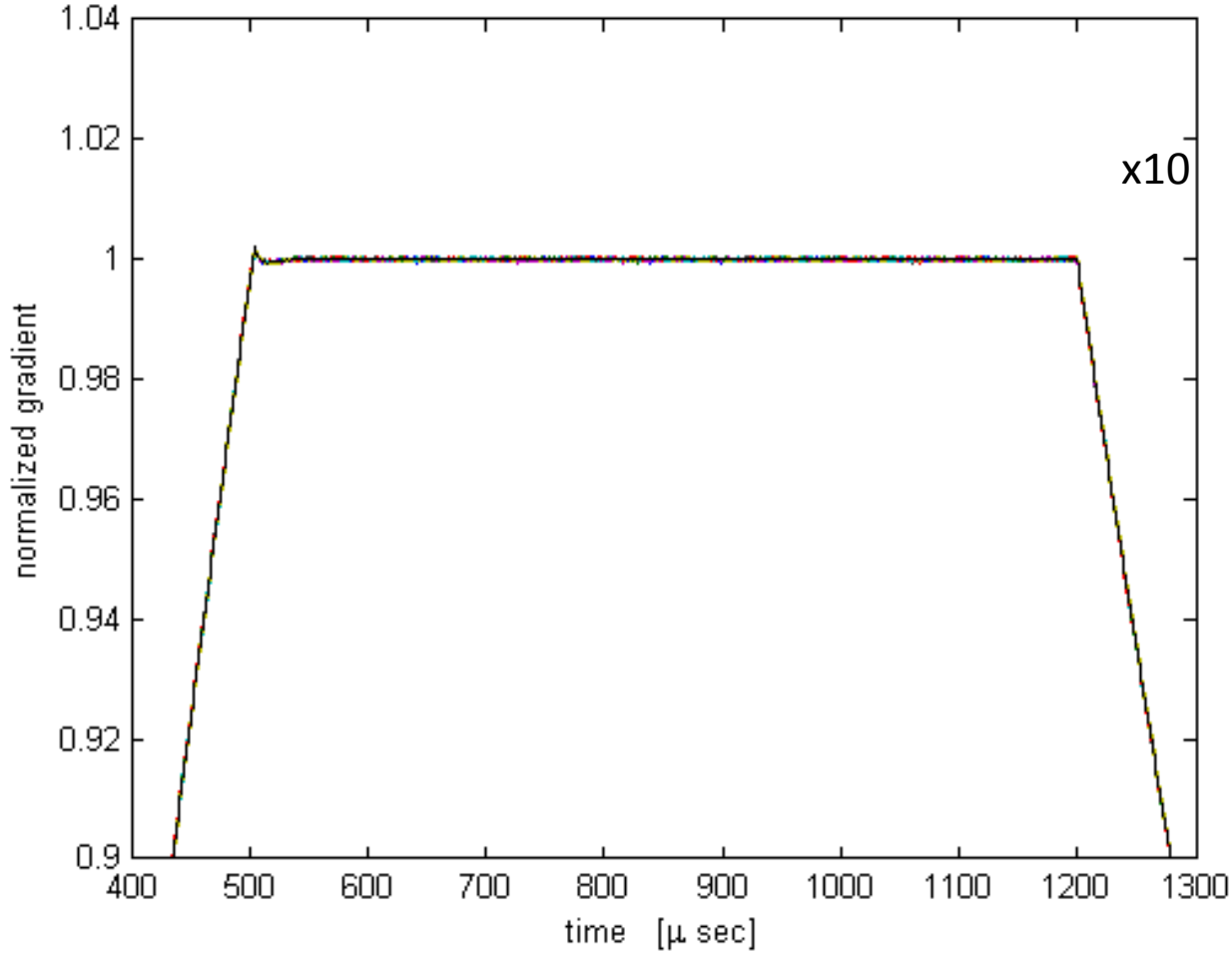

Zooming on the flat top regulation x100

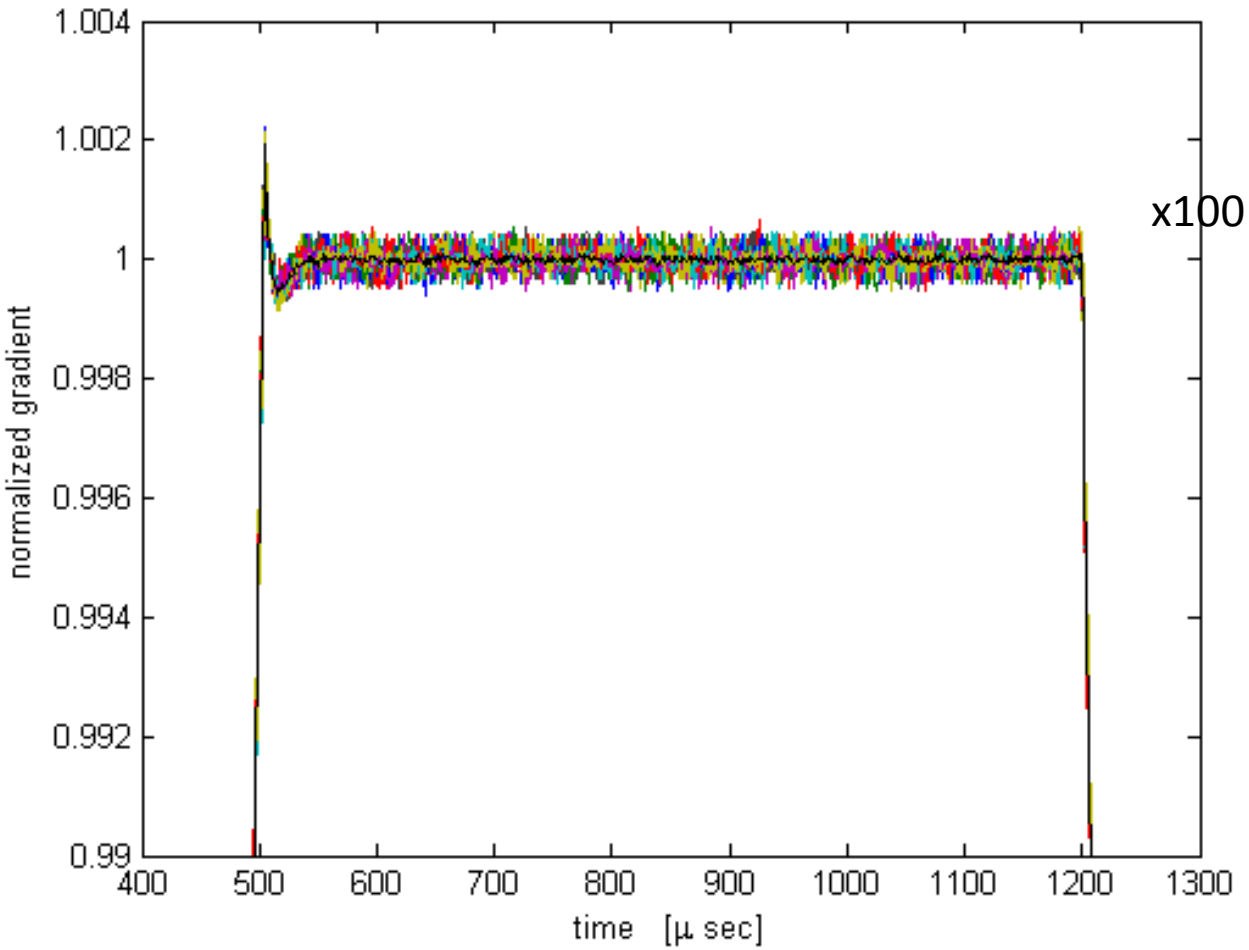

Controller performance

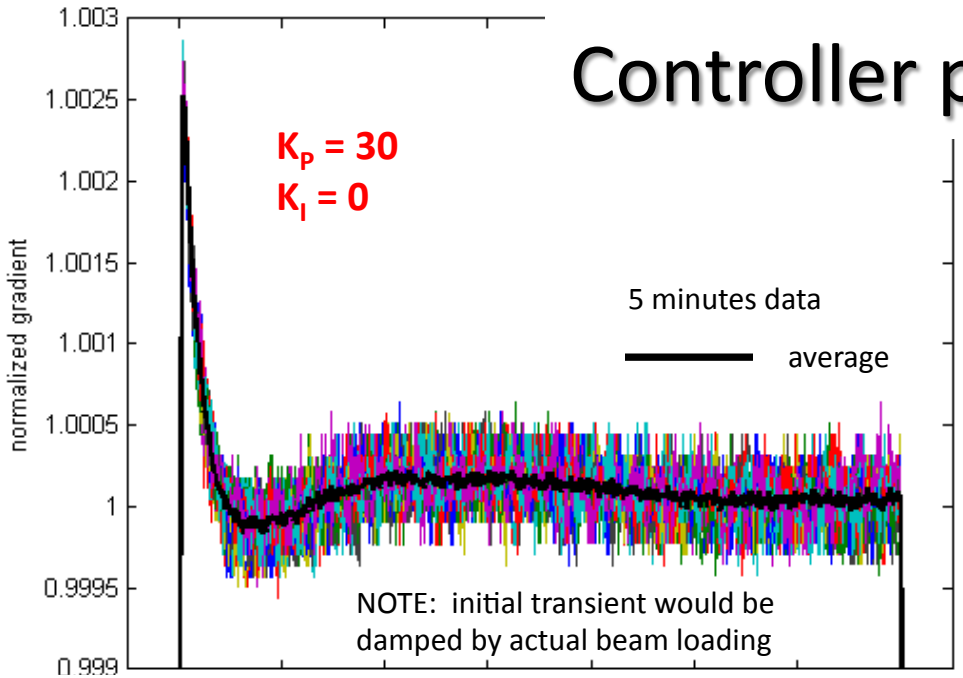

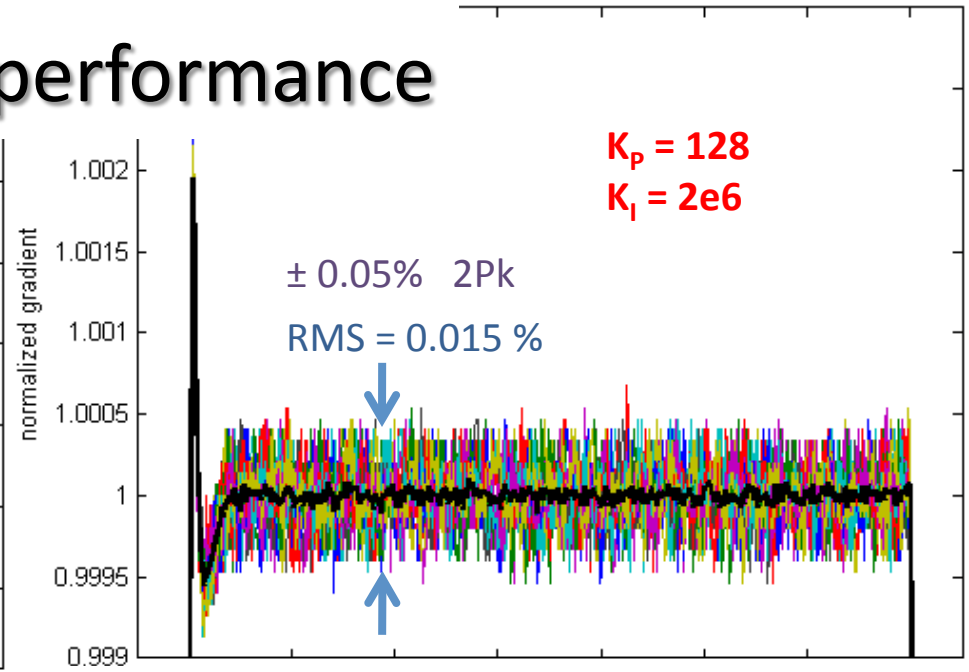

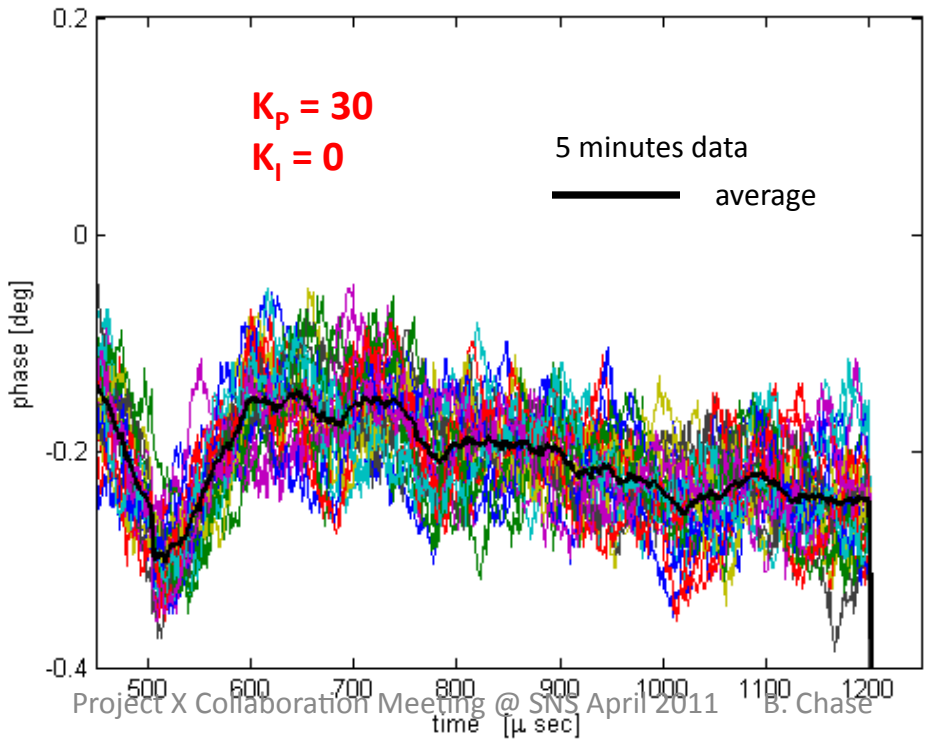

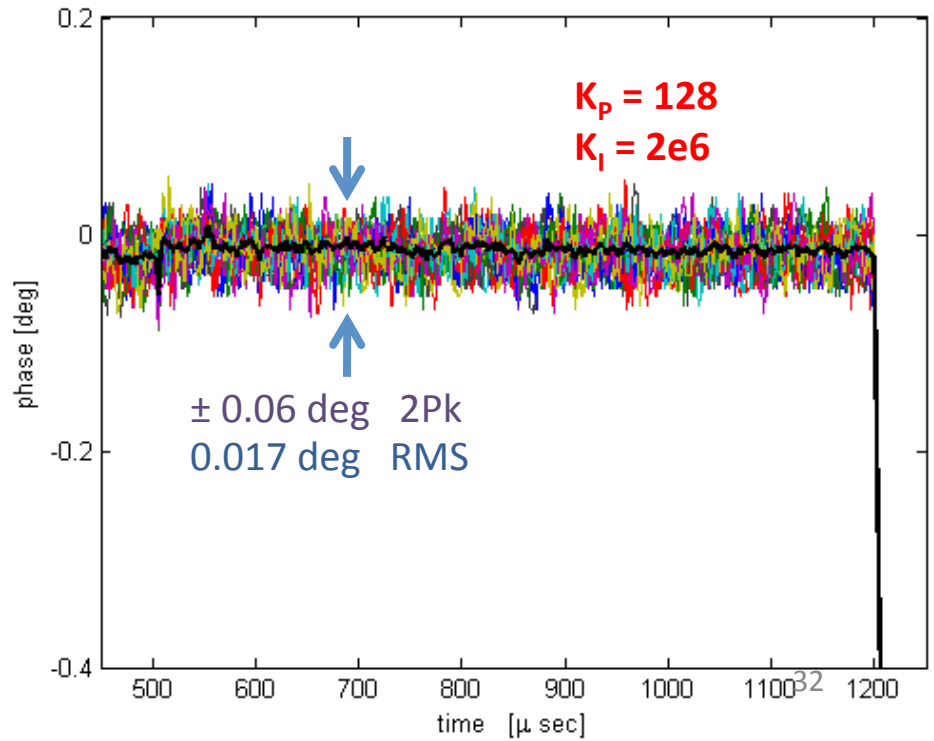

Receiver noise

Amplitude

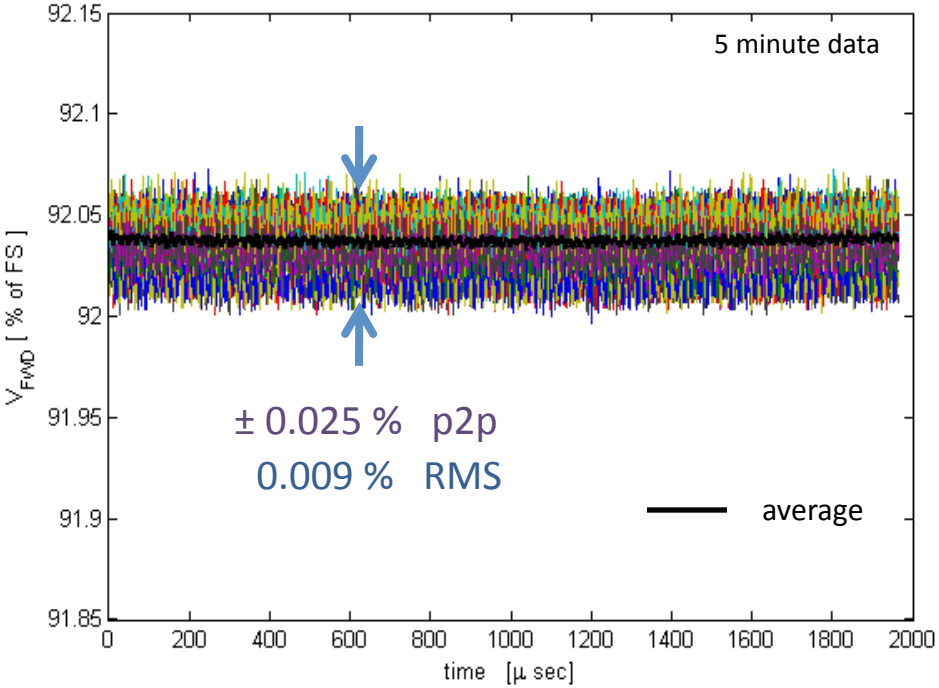

Phase

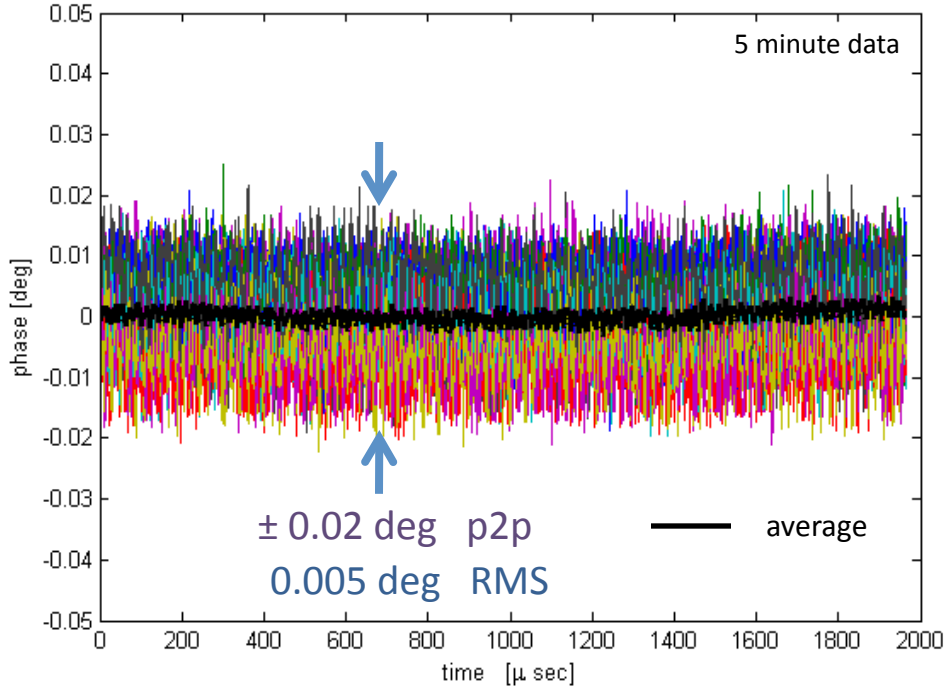

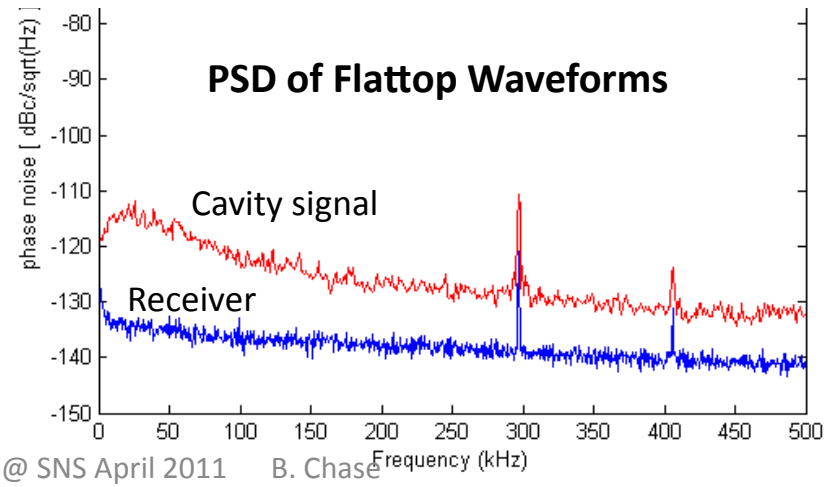

Perturbation analysis

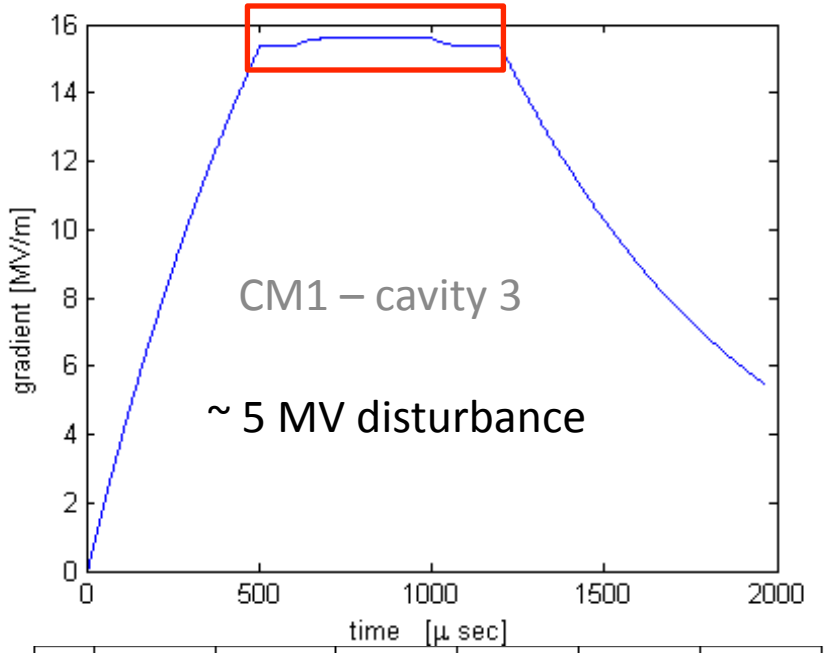

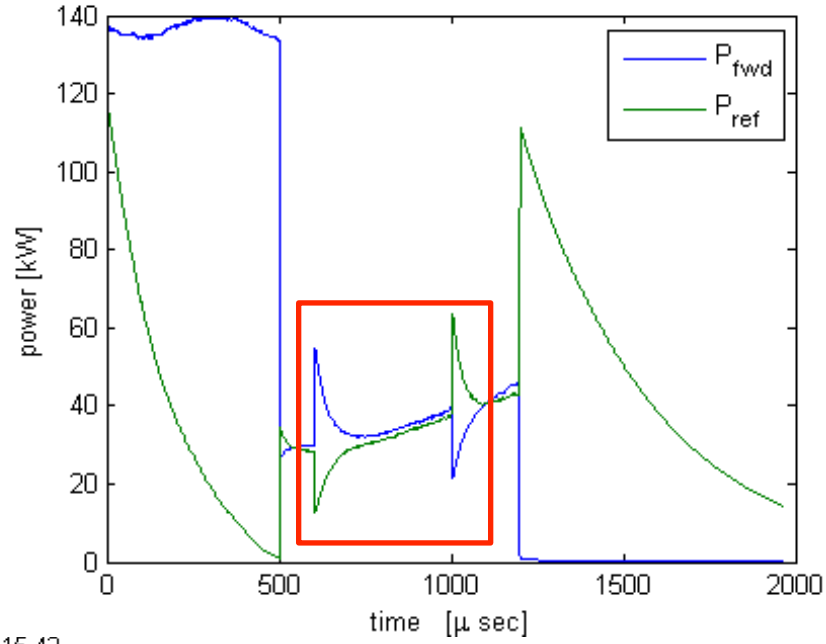

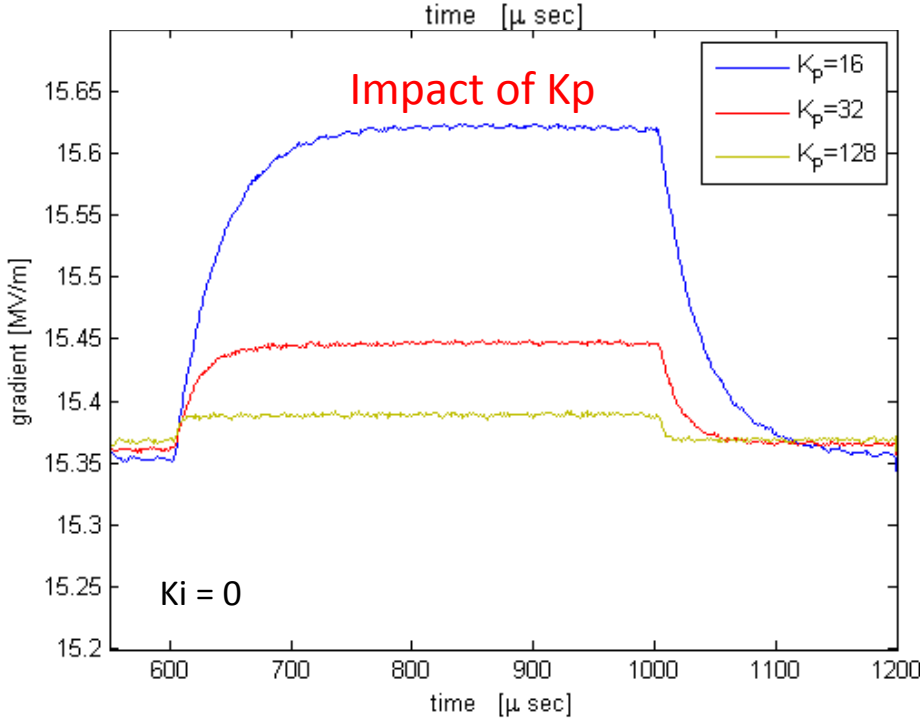

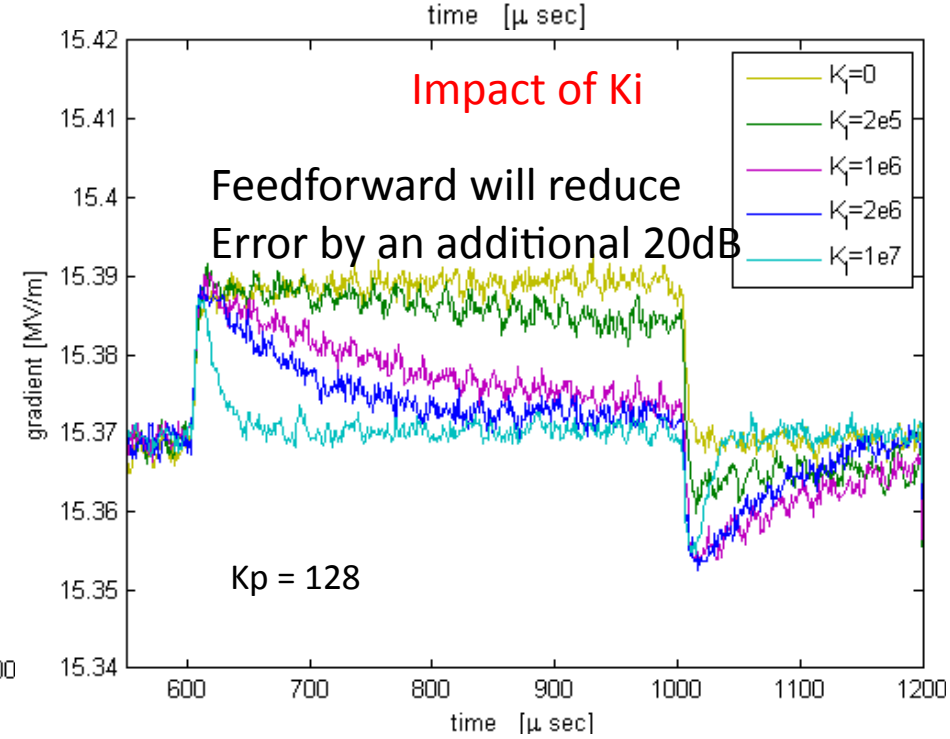

NML Installed System Long Term (1 week) Phase Stability Test

0.25 deg/div
0.2 degPP

Receiver Chain Phase Variation vs Building Temperature

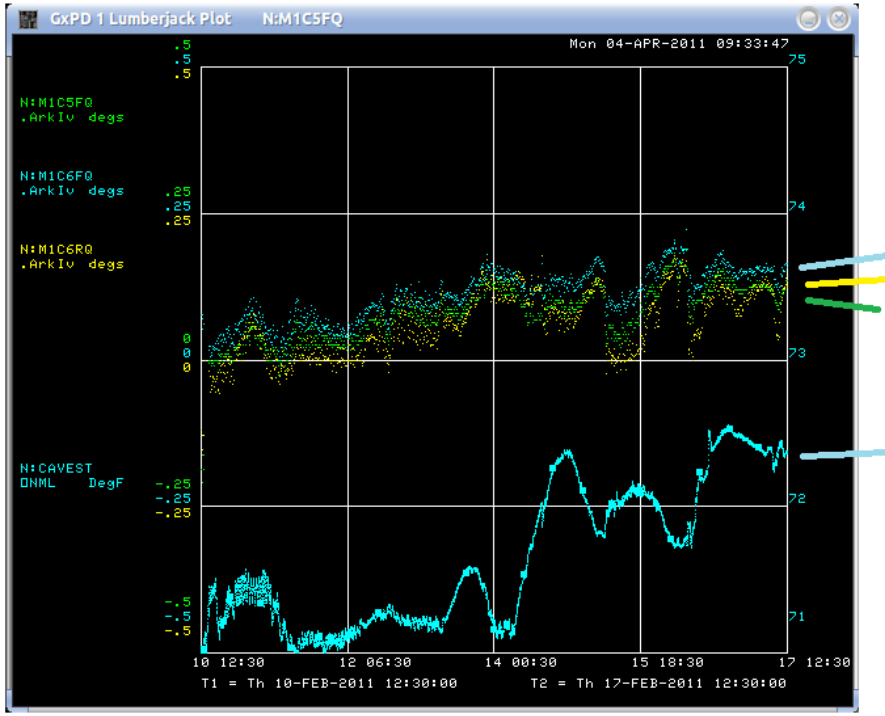

Approximate phase variation
= 0.09 degrees / 1 degree F

Blue - FWD Power (Ch6) Receiver Phase Variation
Yellow - REV Power (Ch6) Receiver Phase Variation
Green - FWD Power (Ch5) Receiver Phase Variation

Blue - Building Temperature

Receiver chain
phase variation test set-up

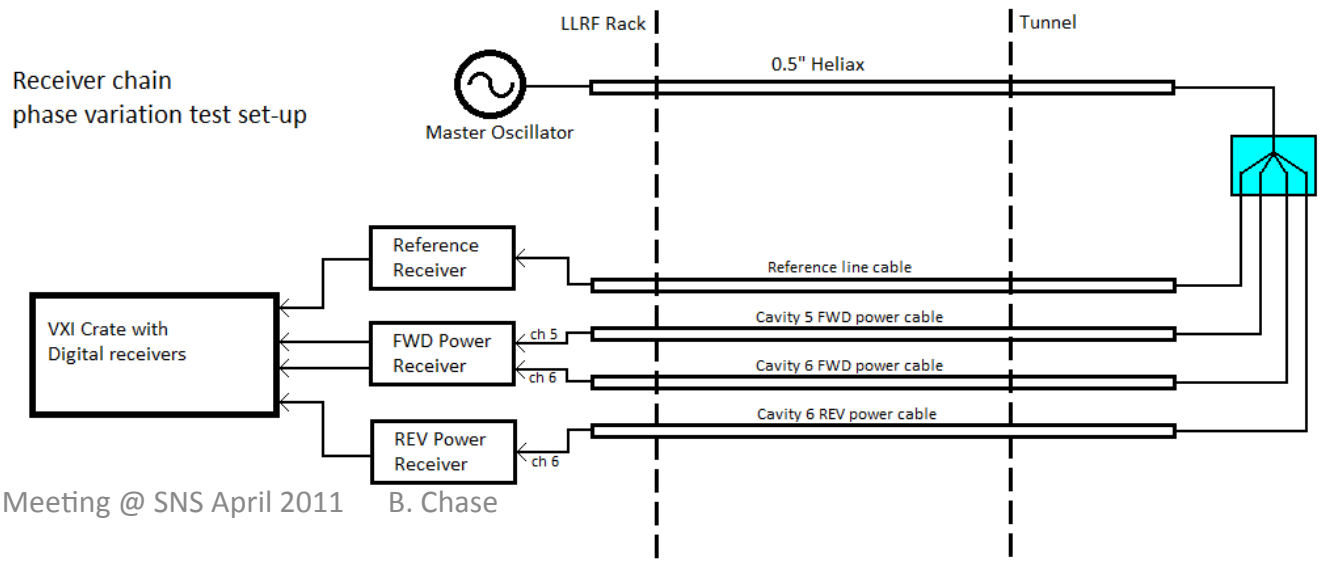

High Stability Reference Line

< 0.001° (_ L = 0.23mm) phase change between taps over L = 100m with 5°K temp. change

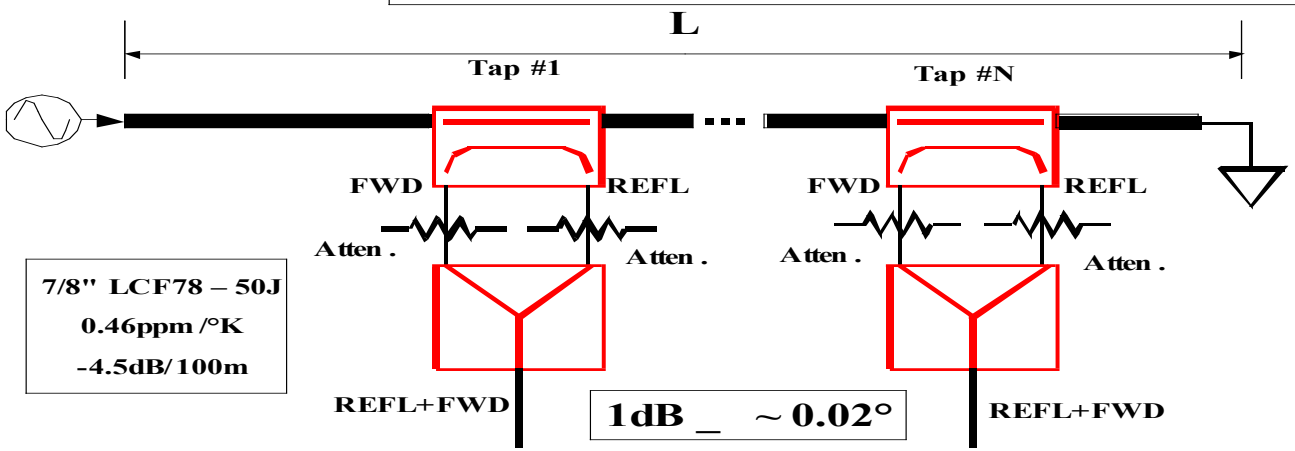

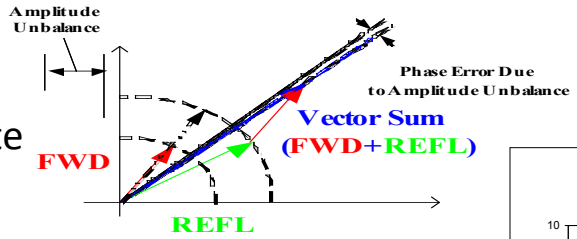

Regulate phase of Tap#1 to regulate the entire line.

Control by phase shift of forward power or temperature control of Line.

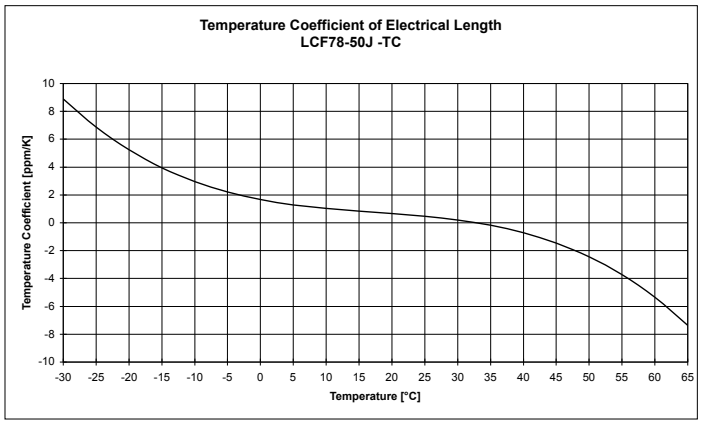

Lab Measurements of Phase Averaging Reference Line

Beams docDB # 3806-v1

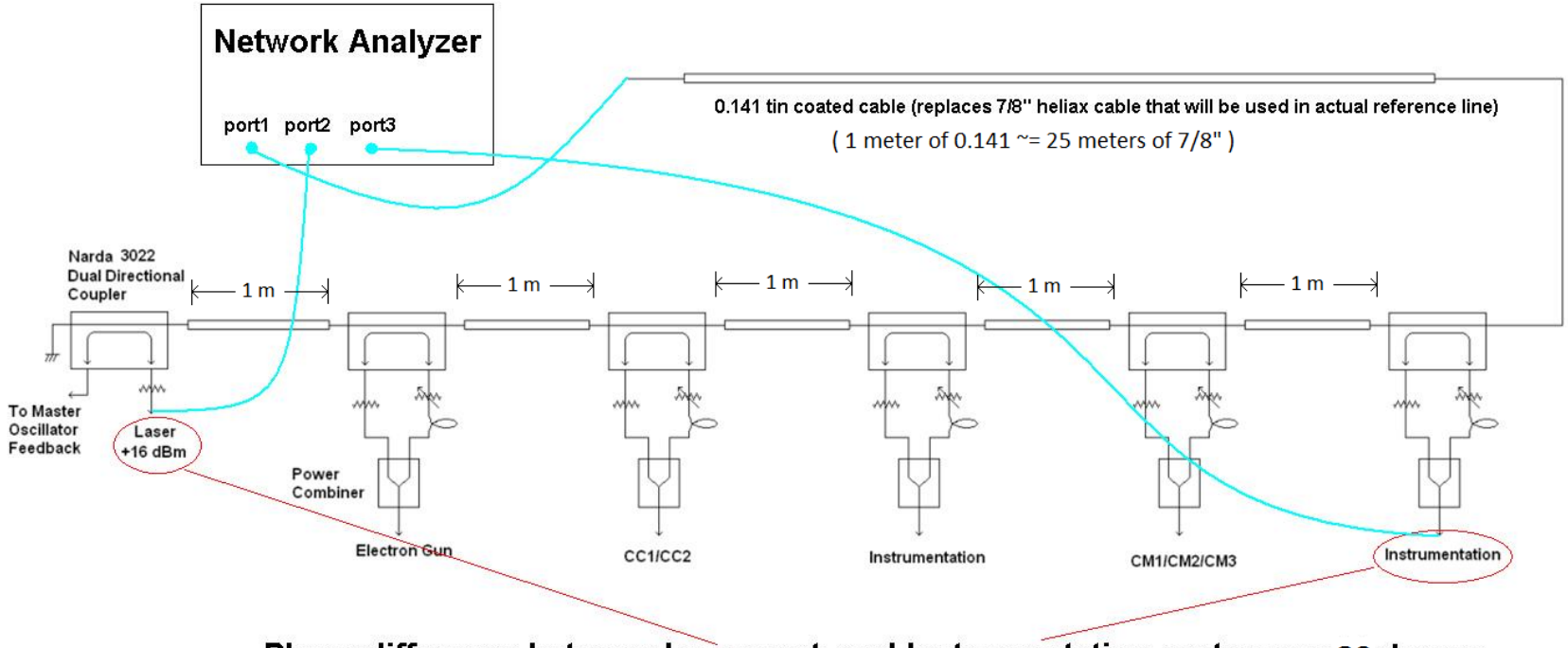

Phase difference between Laser port and Instrumentation port over a 20 degree temperature change (85 - 105 deg F)

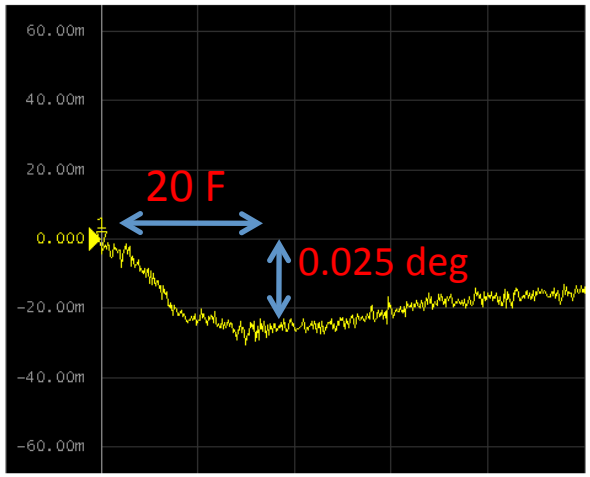

* Measured in the lab using a network analyzer in a temperature controlled oven.

* Long sections of 7/8 " RFS cable replaced with short sections of tin coated .141 cable that has similar temperature characteristics.

* Measurement may have small uncertainty due to calibration drift of the network analyzer.

* Oven temperature ramped from 85 to 105 degrees F in first twenty minutes of measurement.

* Total measurement time is 1 Hour

Future VXI 24 Channel Controller
8 Cavity CW and 16 Cavity Pulsed
Upgrades to ADCs, FPGA, VXI V4.0

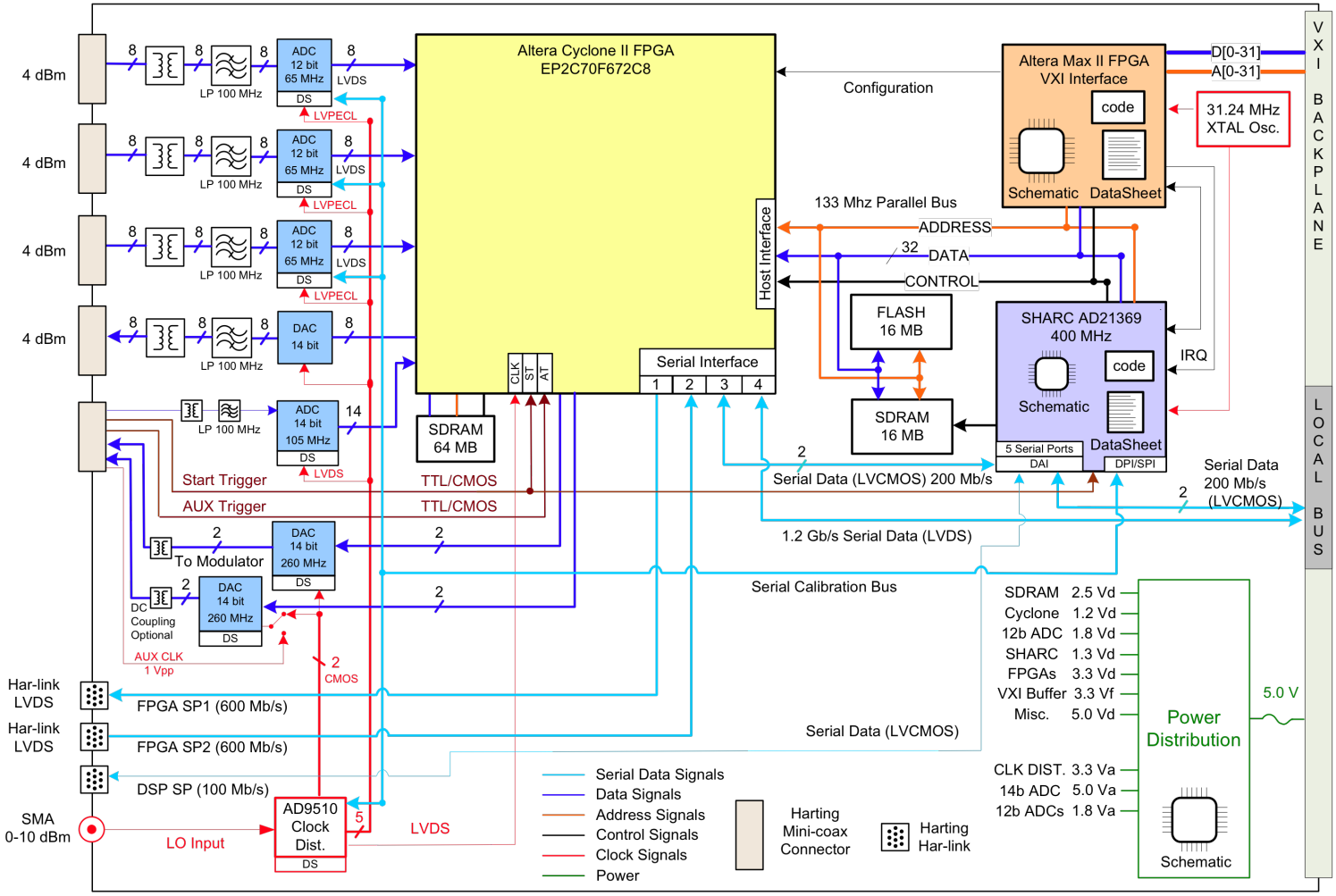

Summary

- Field control issues are well understood and current LLRF systems perform well
  - Controllers, receivers, Master Oscillator, Reference Line
- Resonance control looks promising –
  - Performance is very dependent on cavity design
  - Piezo tuners need continued R&D to prove reliability
  - Brute force RF overpowering of microphonics is too expensive - active compensation work
- More Linac longitudinal simulation efforts are needed to fully understand requirements

Working Group 3
Project X RF Systems

Morning

RF Requirements for Project X *CHASE, B.*

Room C-152, Oak Ridge National Laboratory

09:00

RF Power Sources for Project X *PASQUINELLI, R.*

Room C-152, Oak Ridge National Laboratory

High Efficiency Power Amplifiers for Particle Accelerators *RAAB, F.*

Room C-152, Oak Ridge National Laboratory

10:00

Discussion

Room C-152, Oak Ridge National Laboratory

Coffee Break

SNS, Oak Ridge National Laboratory

Afternoon

Linac RF System Design Options *KANG, Y.*

Simulation Efforts for the 1300MHz Pulsed Linac *CANCELO, G.*

SLAC Project-X RF Power Program
C. Adolphsen

Discussion

15:00 - 15:30

- **General points to be considered by all working groups:**
  - What are the open issues / areas the need attention for the Project-X CD-1 design?
  - Are the requirements clearly defined?
  - What is a path to address any issues identified?

- **WG-3 Specific Topics**
  - LLRF, what are the requirements?
  - CW sources: klystrons, IOTs, **solid state** (325, **650**)
  - What is the impact of supporting long pulse (1.3 GHz) – up to 50 ms, 10% duty cycle? Control and HLRF.

- **Additional Topics and Focus**
  - Present design REQUIRES active piezo compensation. Is this the best direction?
  - 650 section RF power requirements are a factor of **18 times** 325 MHz section
    - **Most of our discussion needs to be with 650 MHz RF**
    - **Is solid state cost effective? Maybe at a lower beam current?**
  - Are adjustable 650 MHz power couplers needed
    - 3 stub tuners?
  - Is the multi-cavity per klystron the correct approach for the pulsed linac?