Argonne NATIONAL LABORATORY

Project X Collaboration Meeting

April 12-14 2011

ANL CW RFQ Design and Fabrication

P.N. Ostroumov

U.S. DEPARTMENT OF ENERGY

Content

- ATLAS Efficiency and Intensity Upgrade
  - Simplified Layout
- CW Radio Frequency Quadrupole (RFQ) development
  - EM design
  - Beam dynamics design
  - Engineering design
  - Fabrication
- Some Comments on Project X Front End

Argonne's ATLAS Efficiency and Intensity Upgrade

- ✓ Improve the efficiency of transporting and accelerating radioactive beams from the CARIBU facility
- ✓ Accelerate more intense stable beams: 10 – 100 more intensity

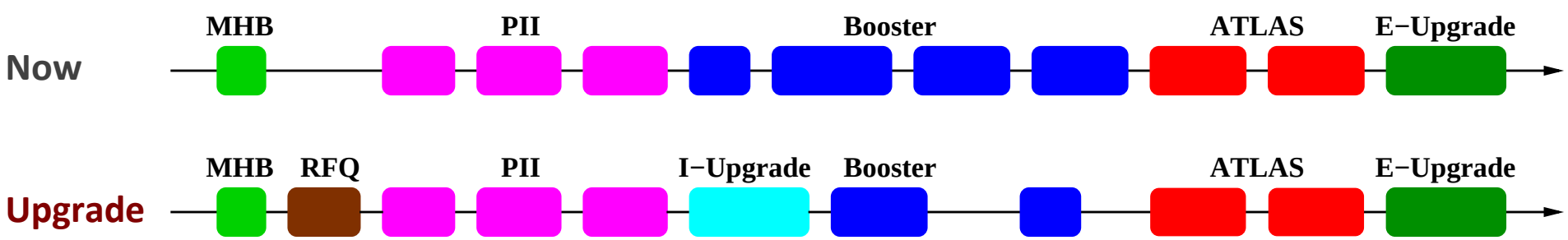

- ➢ A New 60.625 MHz CW RFQ to accelerate beams from 30 keV/u to ~ 300 keV/u
- ➢ A New I-Upgrade cryomodule with 7 QWR- 72.75 MHz cavities & 4 solenoids (9T)

ATLAS Upgrade: CW RFQ and Cryomodule

- 60.625 MHz RFQ

72.75 MHz Cryomodule

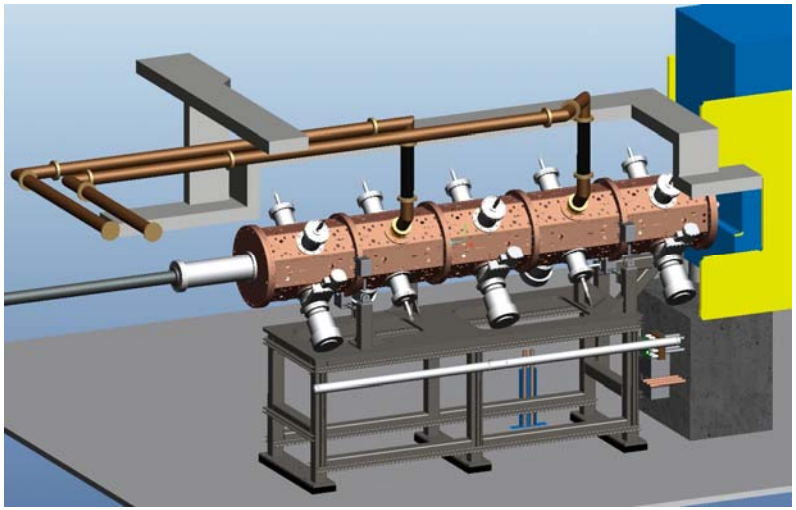

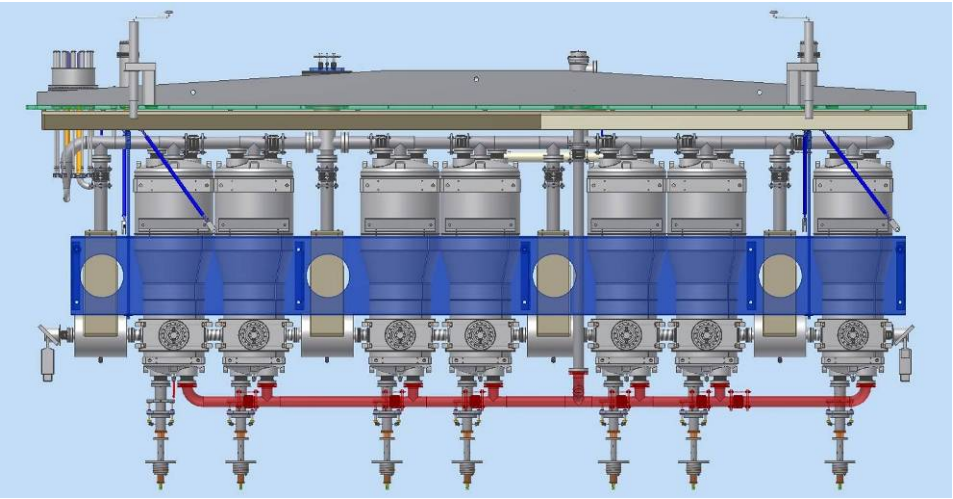

Length	4 meters	5 meters
Voltage	2.1 MV	17.5 MV
q/A = from 1/7 to 1		Seven β_G=0.077 QWRs
5 segments		Four 9-T solenoids

ATLAS RFQ: Design Goals & Parameters

- Satisfy beam requirements: energy, emittance, transmission, …
- Target frequency tunable to operational frequency
- Non operational modes, far away from operational frequency
- Tuners capable of correcting both the frequency and field flatness
- Beam dynamics verification with more than one code
- Produce vane modulation tables for manufacturing

Parameter	Value
Beam current	up to 1 mA
Input Energy	30 keV/u
Output Energy	> 250 keV/u
Frequency	60.625 MHz
Vane Voltage	70 kV
Power	60 kW
Average Radius	7.2 mm
Length	3.81 m
Transverse Acceptance	2 π mm.mrad
Longitudinal RMS Emittance	20 π deg.keV/u
Bunching	External 4-h
Duty Cycle	CW

The EM Design and Fabrication are Based on 57 MHz Prototype RFQ Segment

- Quality factor: Simulated – 9317, Measured – 8688 = 93.2% of simulation
- Demonstrated 92 kV which is limited by the RF power
- Water cooling: 2 circuits, the body and vanes.
- Voltage breakdowns have never been observed – limited by 20 kW RF. Took one hour to reach 92 kV

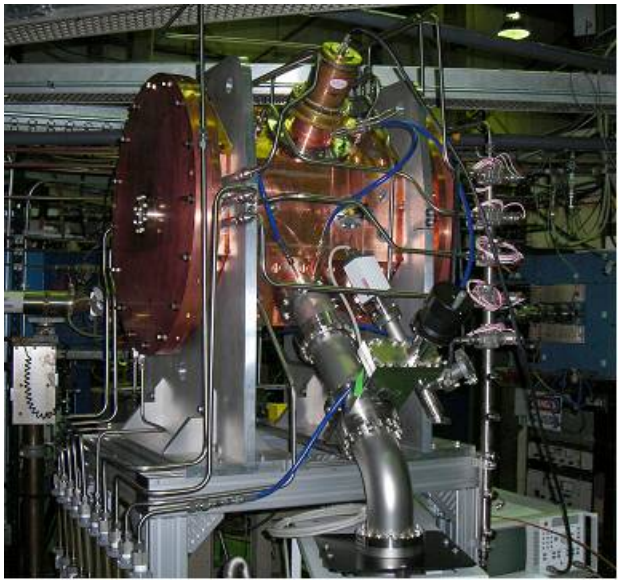

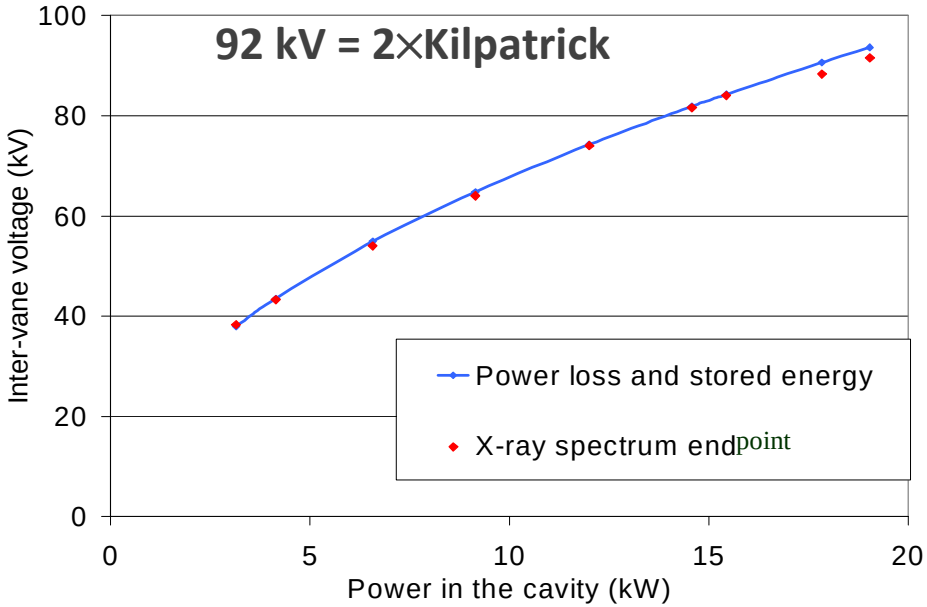

RFQ Design: An Interactive & Iterative Procedure

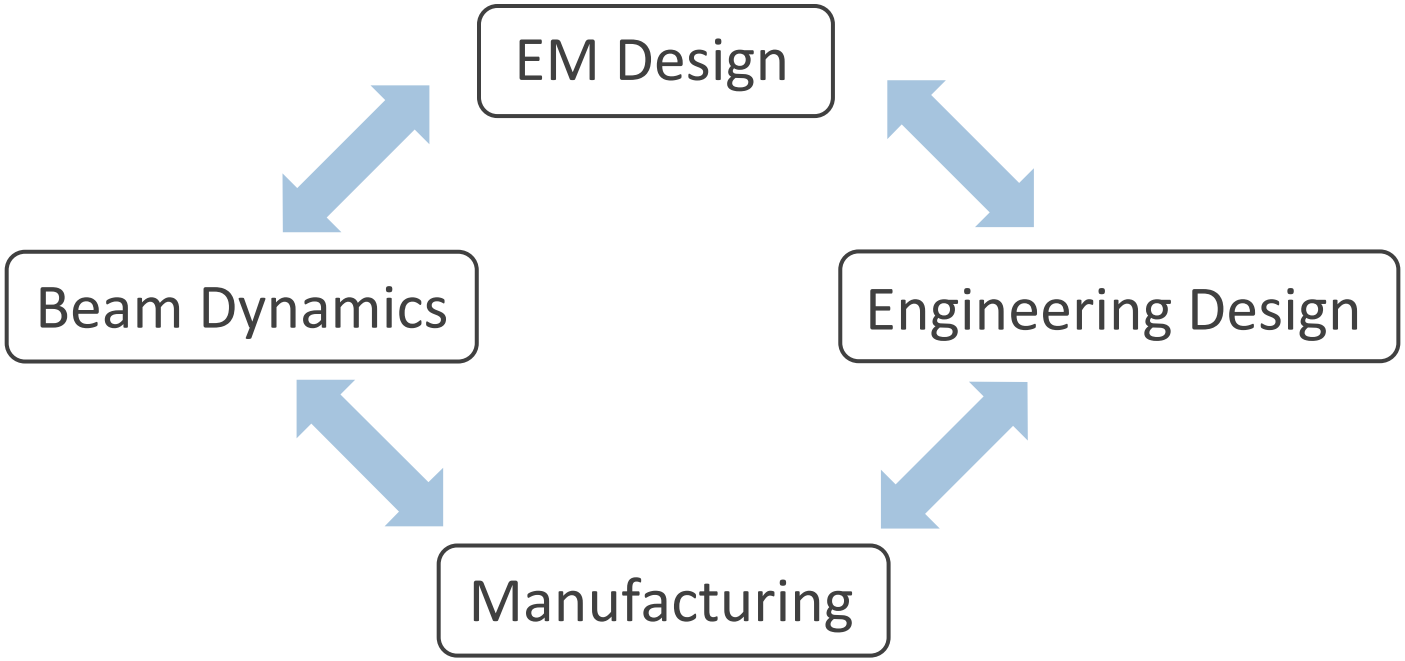

- Actual engineering 3D model & drawing into EM simulation model
- Actual vane modulation from beam dynamics simulation
- Manufacturing tolerances versus model accuracy

Full 3D Modeling: Building the Geometry

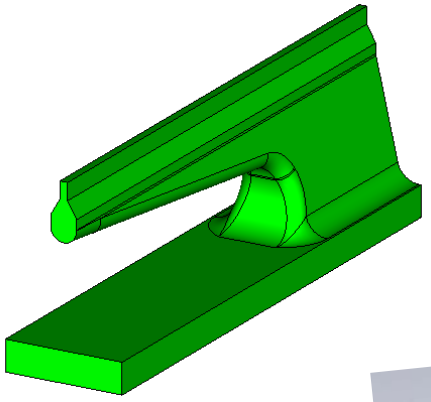

1) Engineering 3D model for a single vane (Pro/E step file)
2) Imported into Micro-Wave Studio
3) Copied and mirrored to build the whole structure
4) An octagonal RF volume is defined for the enclosure

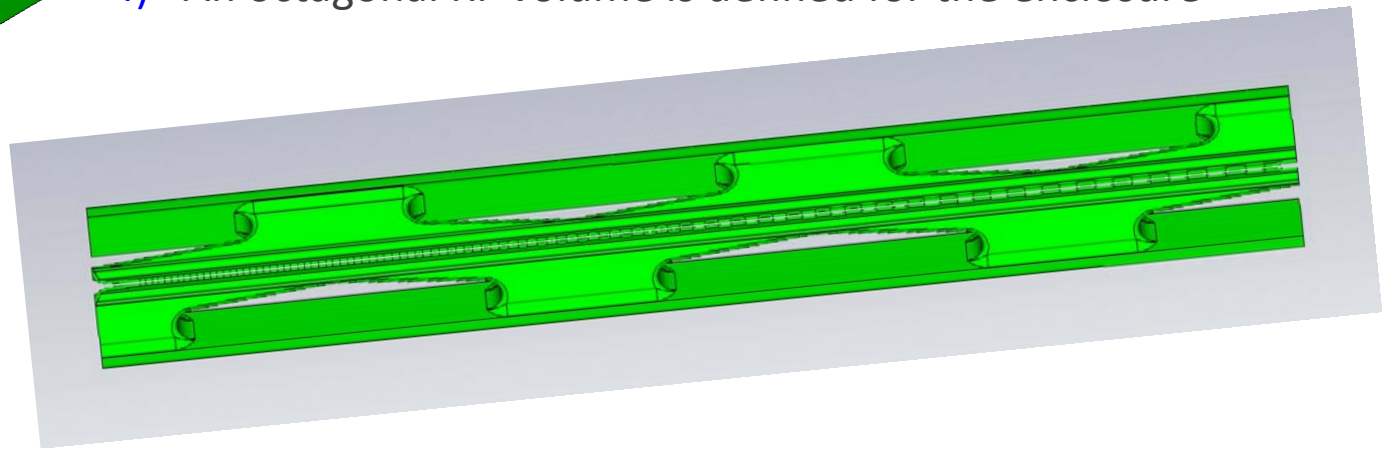

A Window coupled structure → Reduces transverse size & pushes away non-operational modes

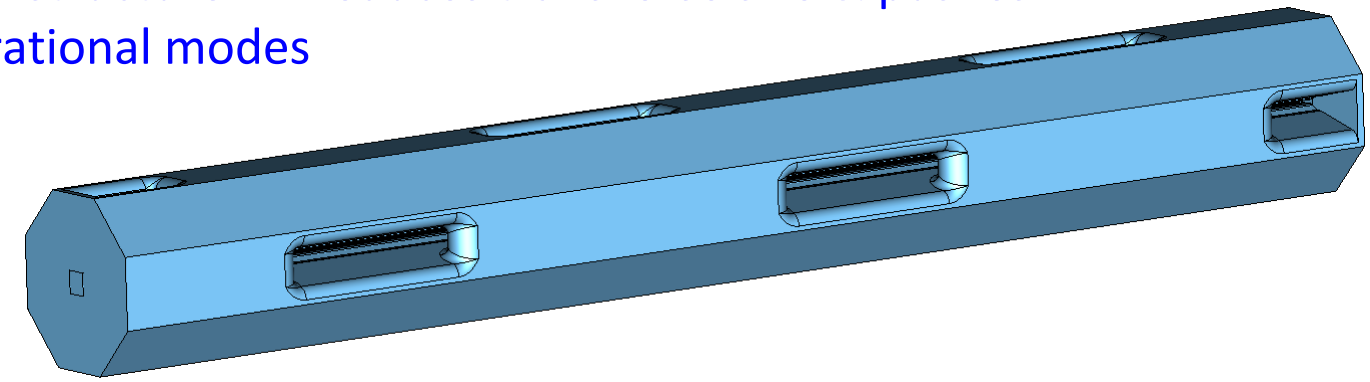

Full 3D Modeling: Applying Vane Modulation

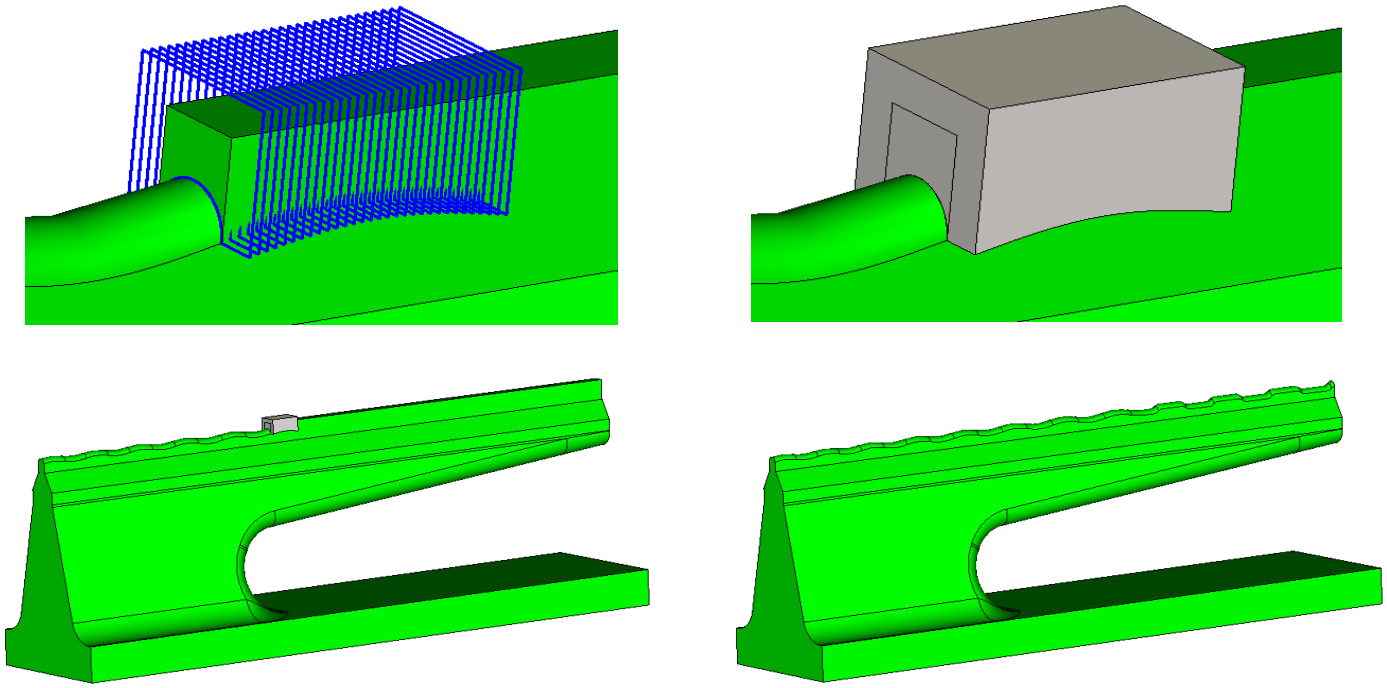

- With this level of geometry detail, the results are very sensitive to the meshing choice
- Benchmarking using measurements on a real RFQ is very important
- ➢ We are fortunate to have a prototype 57.5 MHz RFQ along with the original drawings

Full 3D Modeling: Mesh Choice & Setup

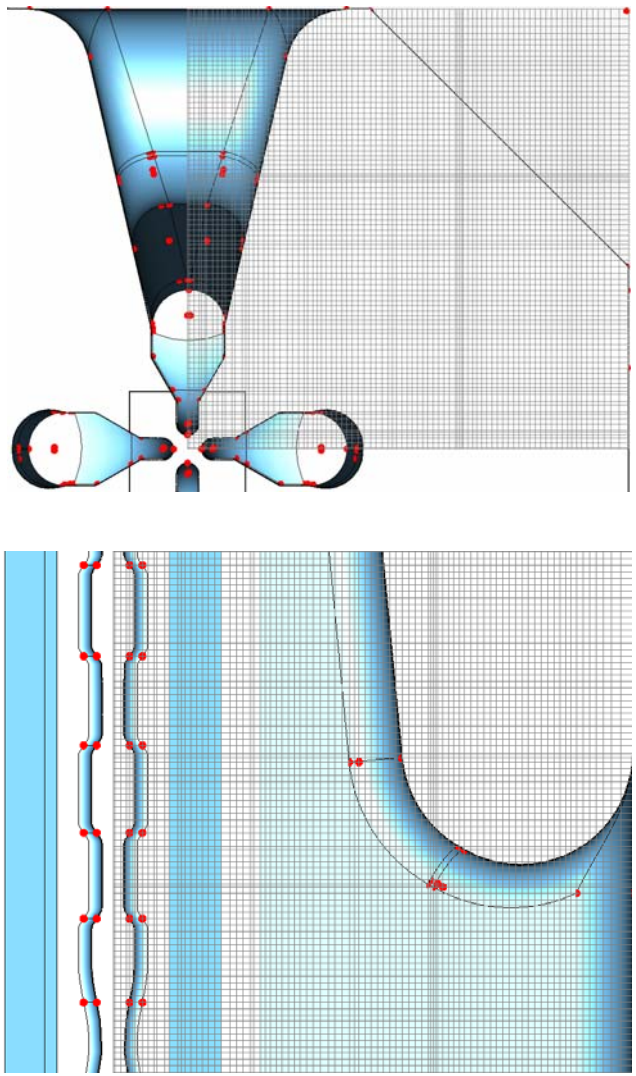

Auto-mesh

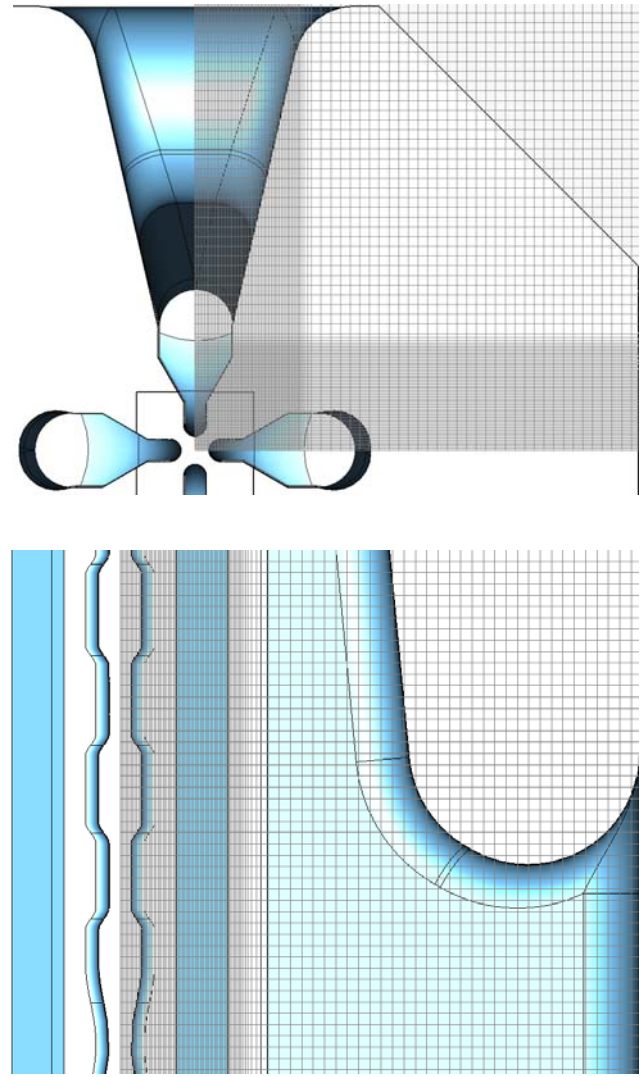

Finer local mesh

Cavity frequency

- Tuners can only increase the resonator frequency
- Simulation code is benchmarked against the RFQ prototype
- Contribution of
  - Input/output matchers
  - Vane modulation

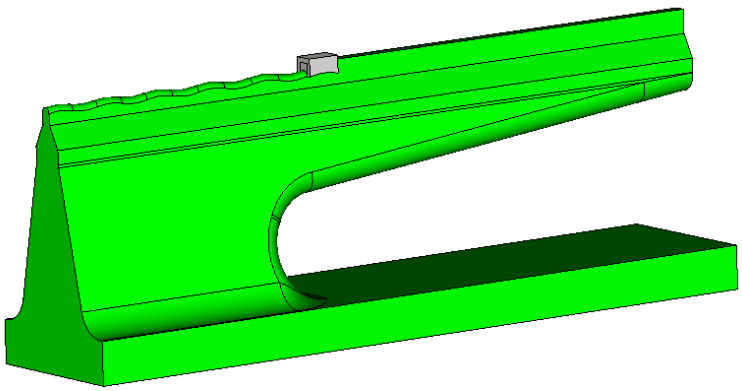

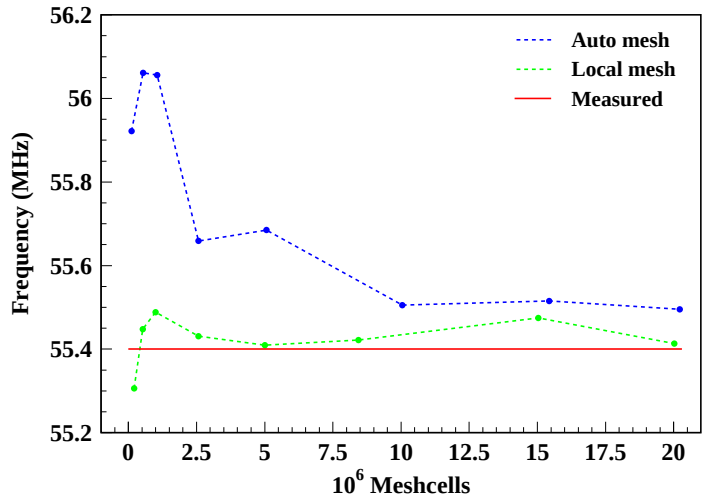

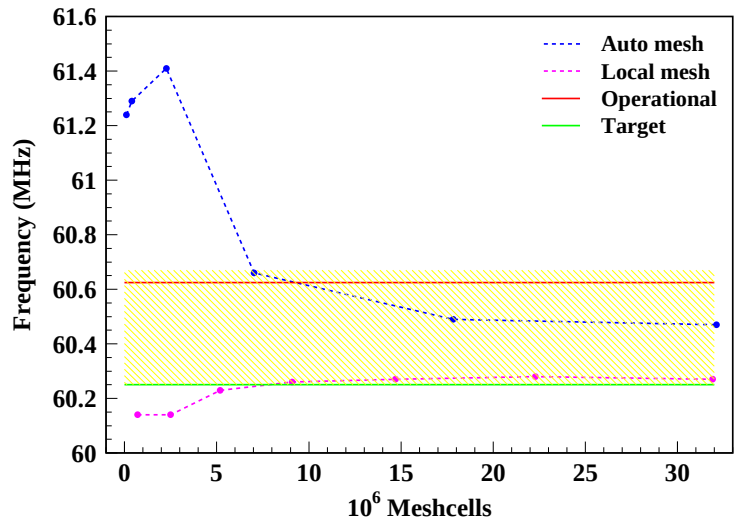

Full Model of ATLAS RFQ in MWS: Different Effects

- Radial matchers, modulation and tuners effect on the frequency

Effect	Frequency (MHz)	Frequency shift (kHz)
No Matchers	59.77	0
Input Matcher Only	59.97	200
Output Matcher Only	59.90	130
Input and Output Matchers	60.10	330
Modulation	60.27	170
15 Tuners (5” Φ, 1” deep)	60.69	420

- Field flatness: ~ 2-3 % tilt over the whole RFQ

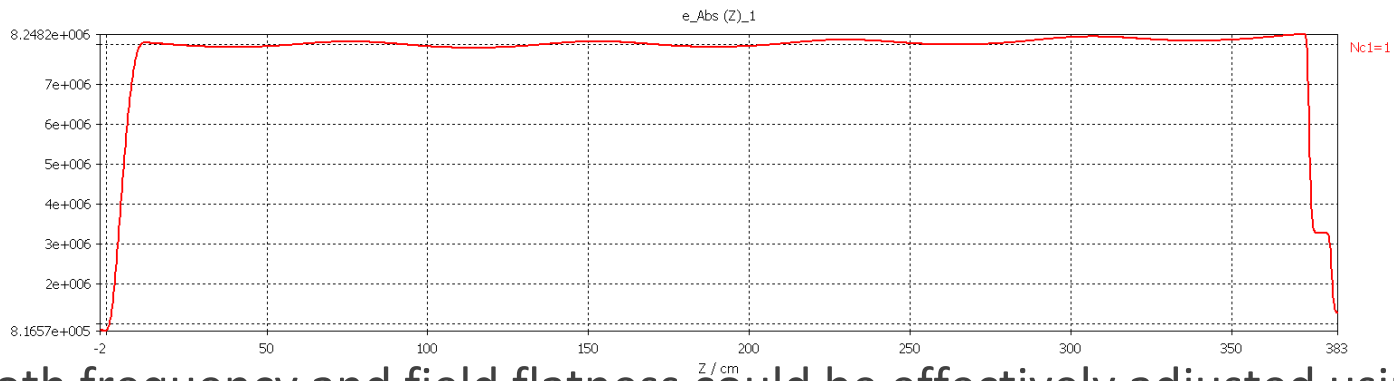

- Both frequency and field flatness could be effectively adjusted using the appropriate tuners

Full Model of ATLAS RFQ: 3D Model & MWS Fields

- 3D Engineering model

- 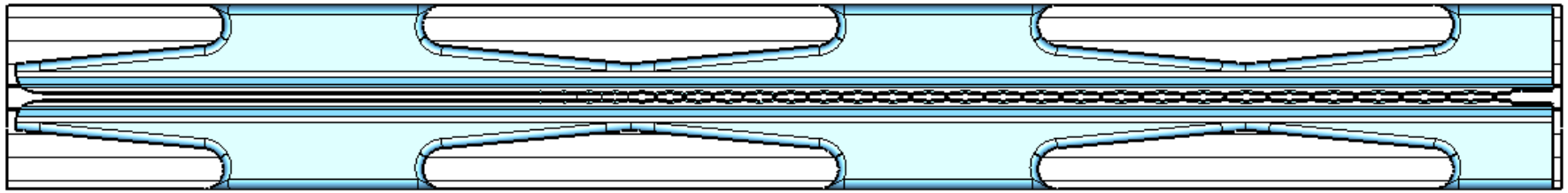

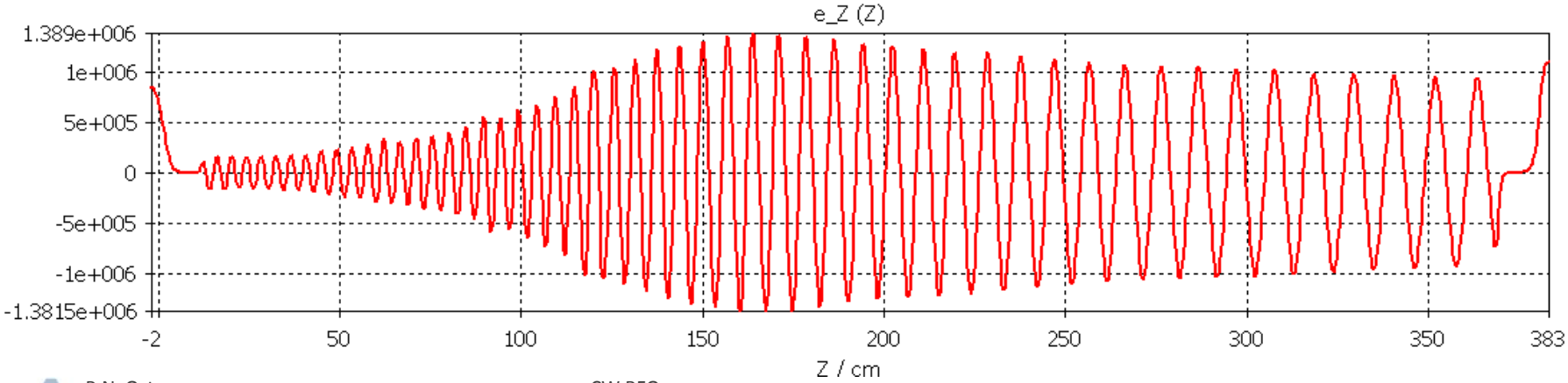

RFQ Beam Dynamics: 8-term Potential vs. 3D Fields

- Comparison of the E-field components (Ex, Ey, Ez) along the RFQ at $R_0/4$
- Longitudinal component agree to ~ 1%, the transverse components agree to 1-2 %

- 8-term pot.
- 3D fields (Cell by Cell)

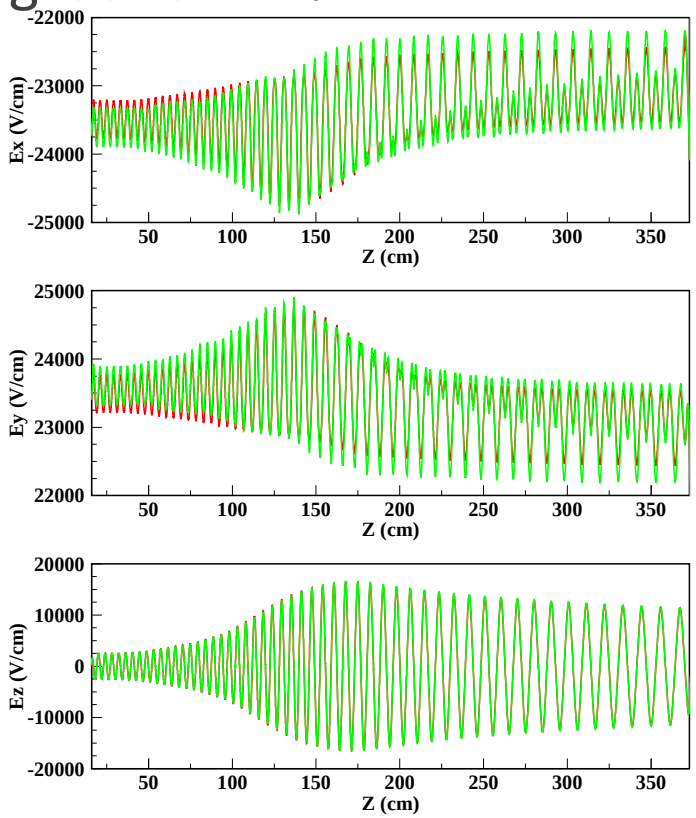

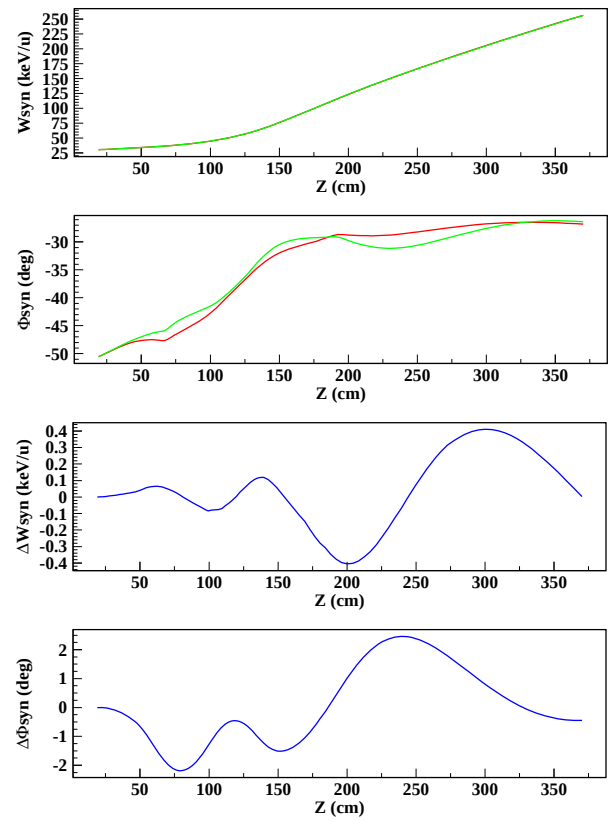

RFQ Beam Dynamics: Energy from CST Particle Studio

- Synchronous particle energy and phase direct verification using CST Particle Studio

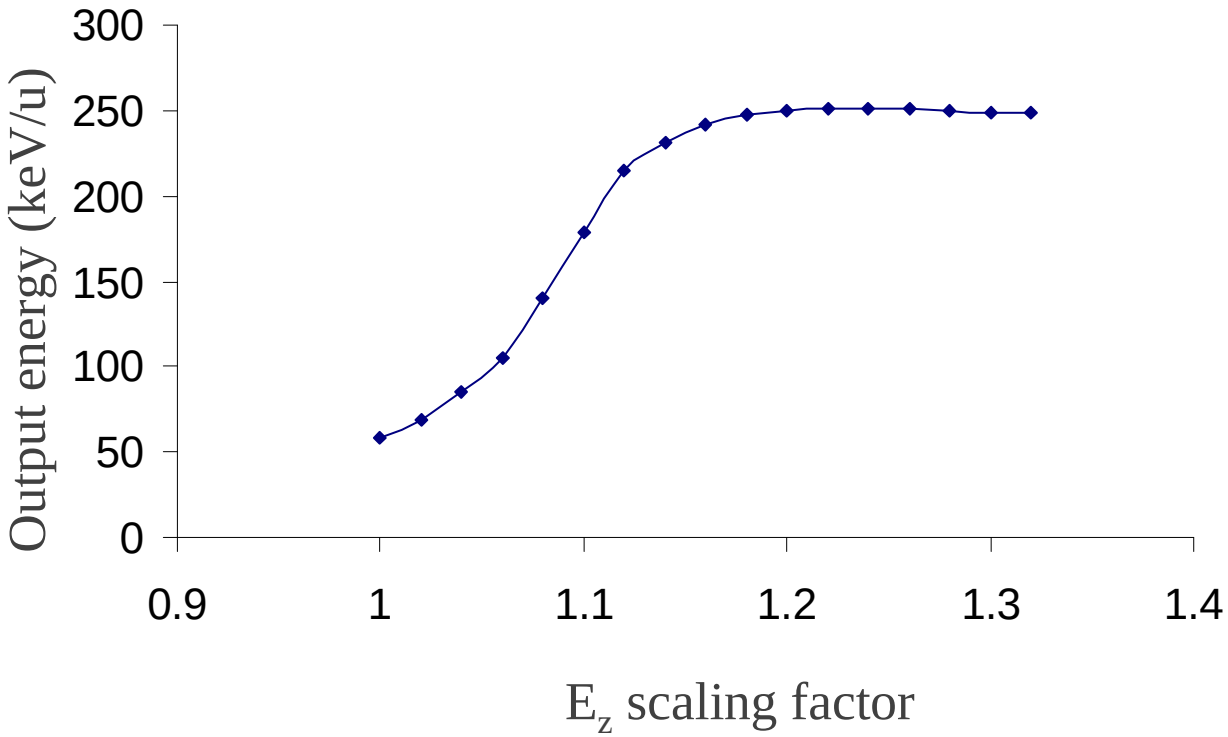

Increased Efficiency of the RFQ Accelerating Field

- Conventional approach

ANL approach

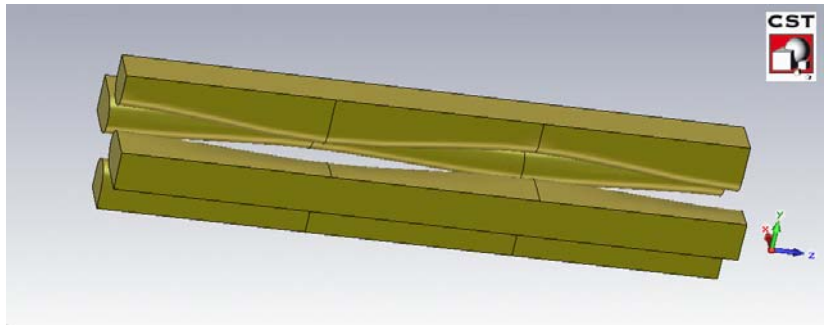

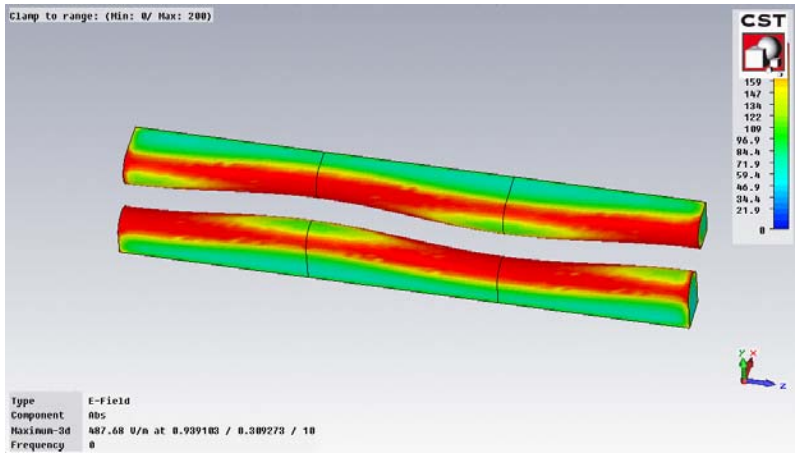

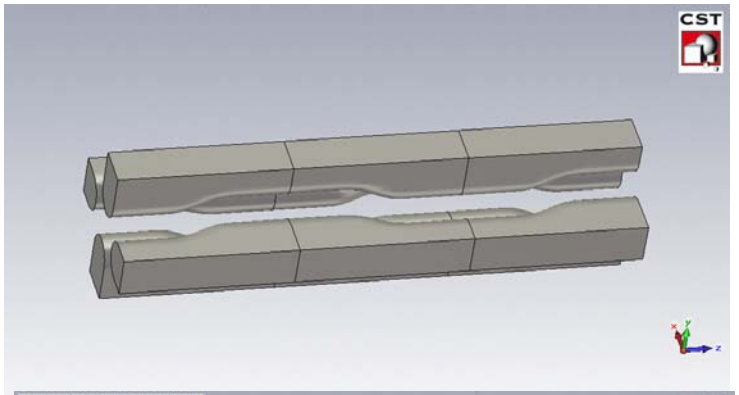

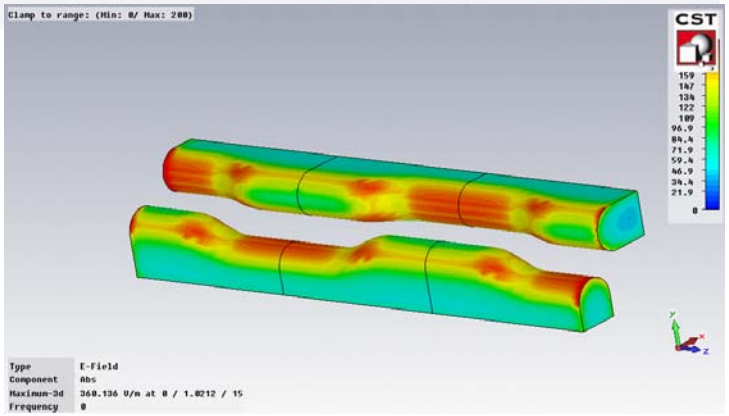

Vane Tip Modulation

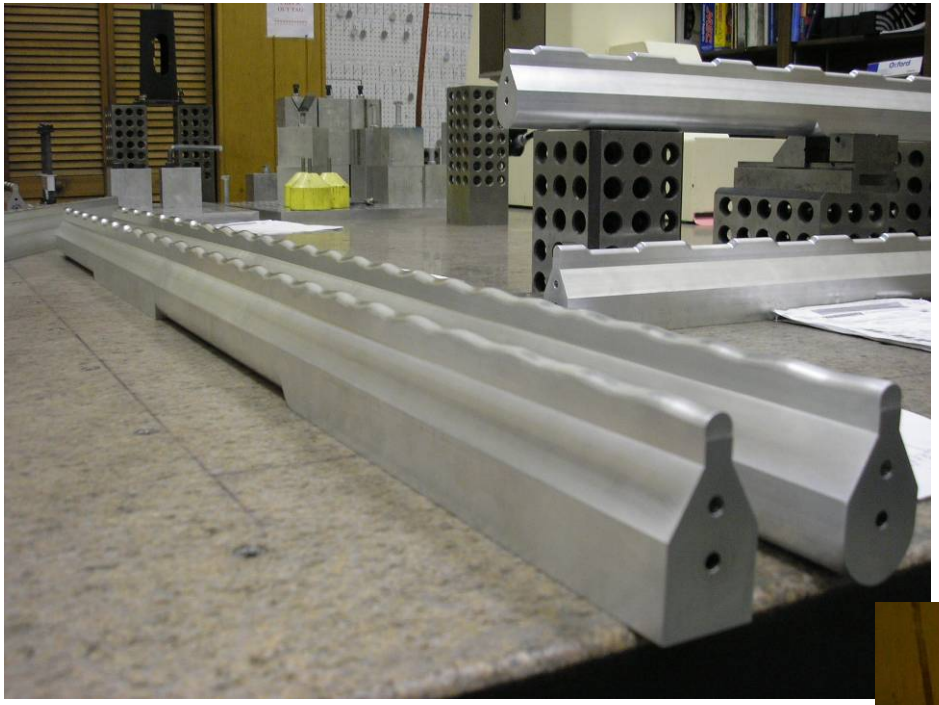

Initial section is sinusoidal

Accelerating section is trapezoidal

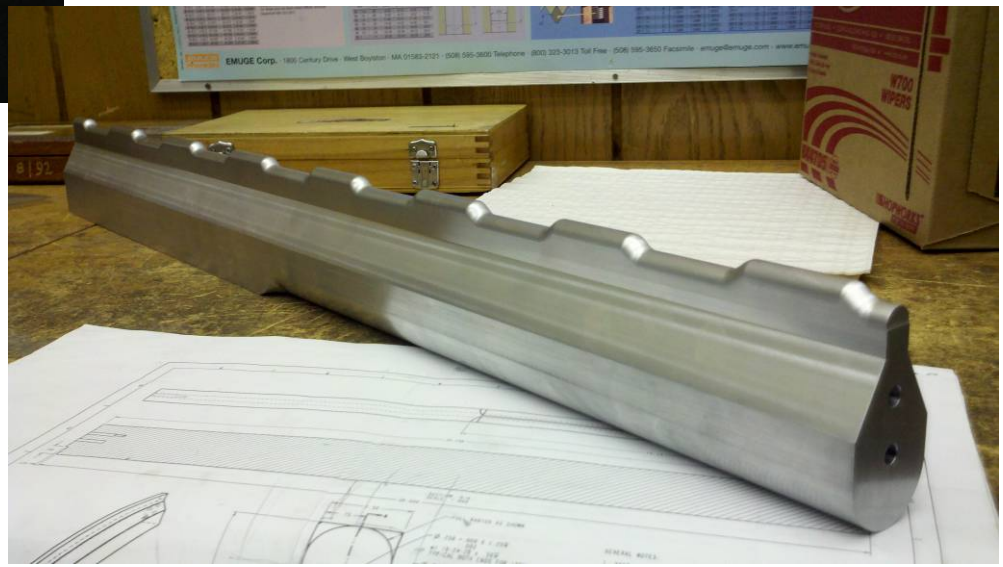

Accelerating Field in the RFQ

- Increased effective accelerating field due to the higher transit time factor
  - ATLAS RFQ: energy increase from 250 keV/u to 295 keV/u
  - Equivalent voltage gain in the modified section is 400 kV
  - The same RF power

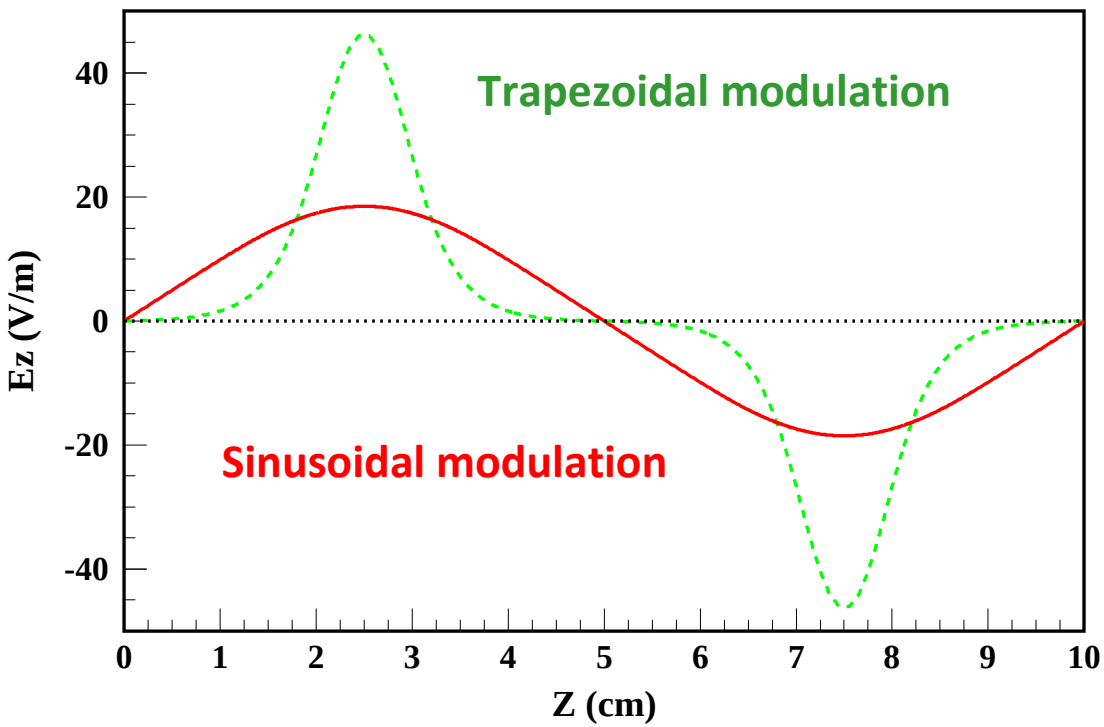

Trapezoidal vs. Sinusoidal Vane: Peak Surface Fields

Sinusoidal vane

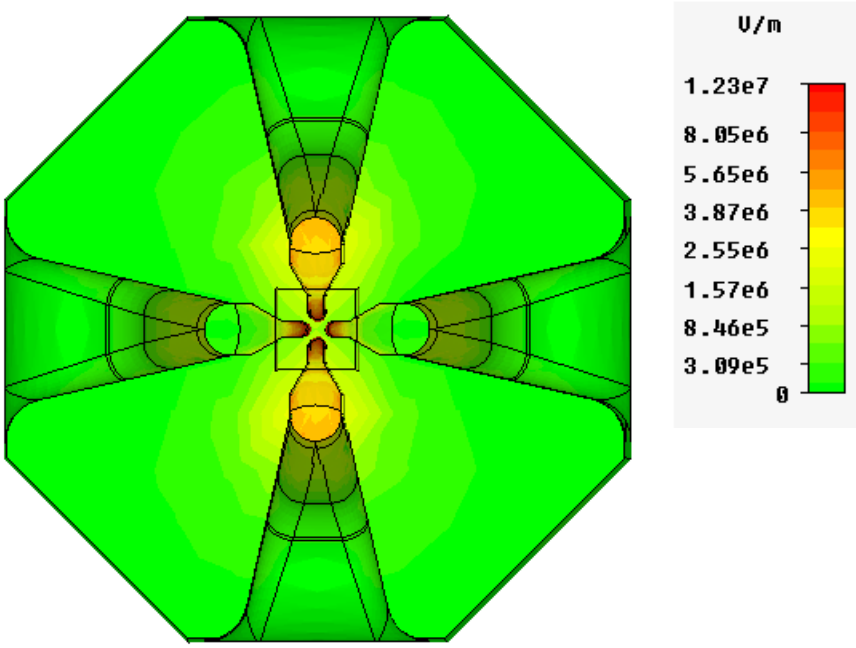

Type	E-Field (peak)
Monitor	Mode 1
Component	Abs
Maximum-3D	1.51623e+007 V/m at 0.300225 / 0.900674 / 136.033
Frequency	60.1866
Phase	0 degrees

Trapezoidal vane

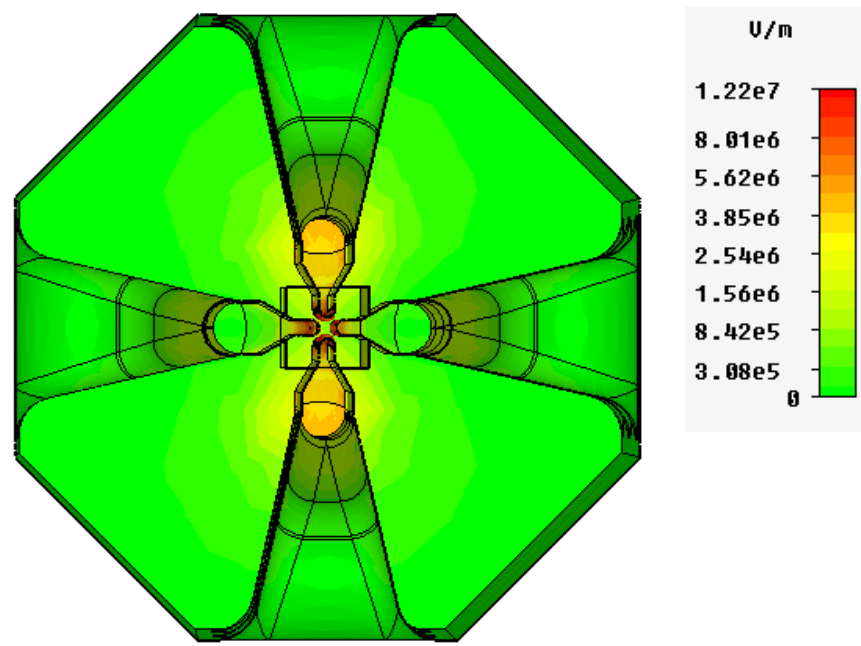

Type	E-Field (peak)
Monitor	Mode 1
Component	Abs
Maximum-3D	1.72273e+007 V/m at 0.150112 / 0.675506 / 372.554
Frequency	60.1376
Phase	0 degrees

- ✓ Peak surface fields from MW-Studio, verified to be ~ 10% higher than from EM-Studio
- ✓ 15 % increase brings the peak from 13 MV/m to 15 MV/m which is ~ 1.5 Kp

Trapezoidal vs. Sinusoidal Vane: RFQ Beam Dynamics

- The same input power → higher output energy with trapezoidal vane modulation without perturbing the rest of beam dynamics (No transverse emittance growth)

- Sinusoidal vane
- Trapezoidal vane

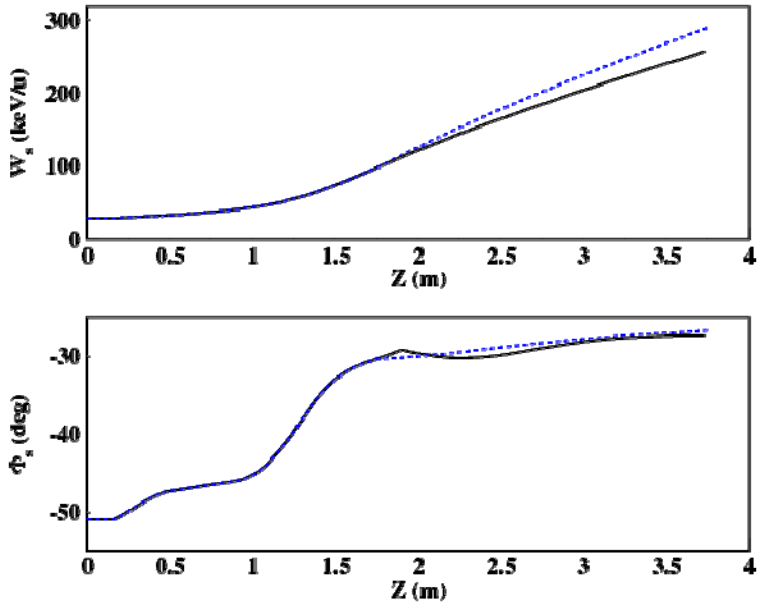

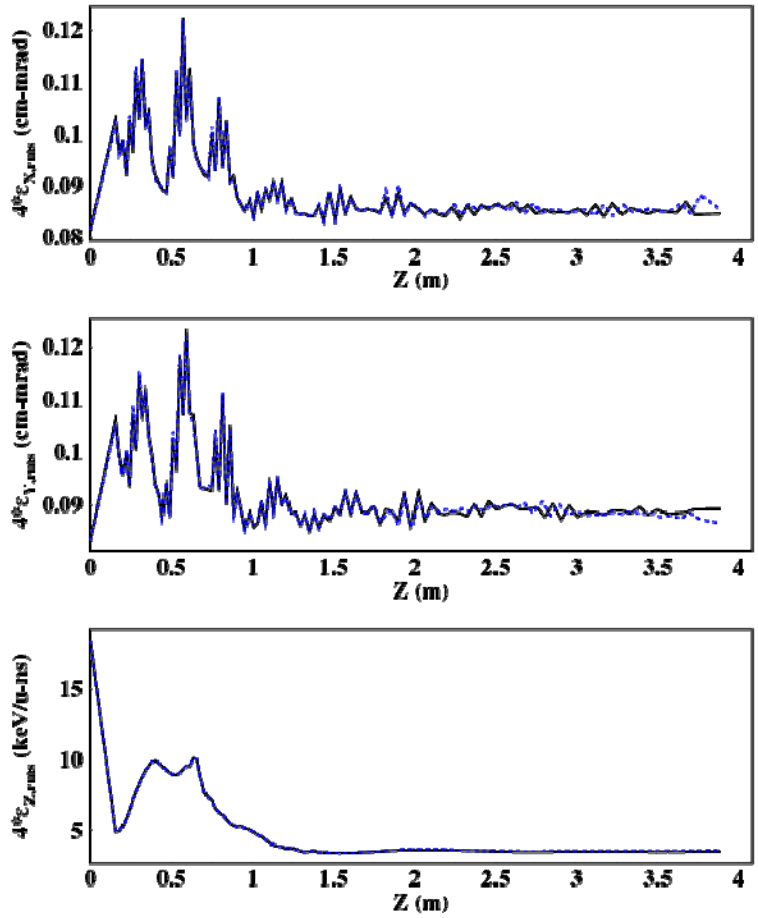

✓ Synchronous particle energy & phase

✓ 4*RMS emittances along the RFQ

RFQ Beam Dynamics: New Type of Output Matcher

- Geometry parameters: 1st straight section (L0, R0) followed by a curved section (LC) and ending with a 2nd straight section (L1, R1)
- R0 and the total length are defined, other parameters (L0, L1 and R1) are determined by fit to produce an axis symmetric beam at the RFQ exit
- This type of output matcher relaxes the constraint on the total RFQ length …

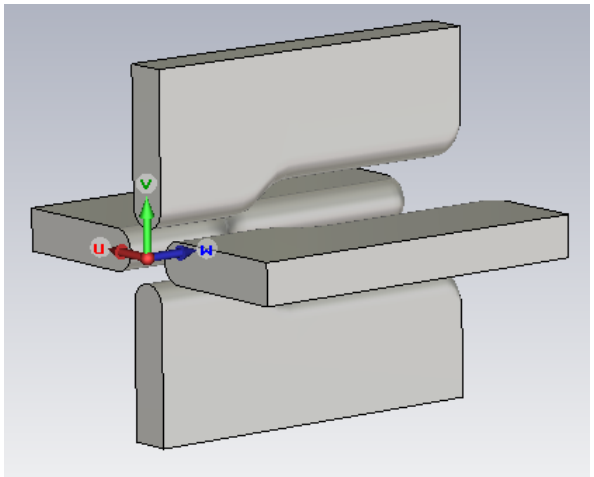

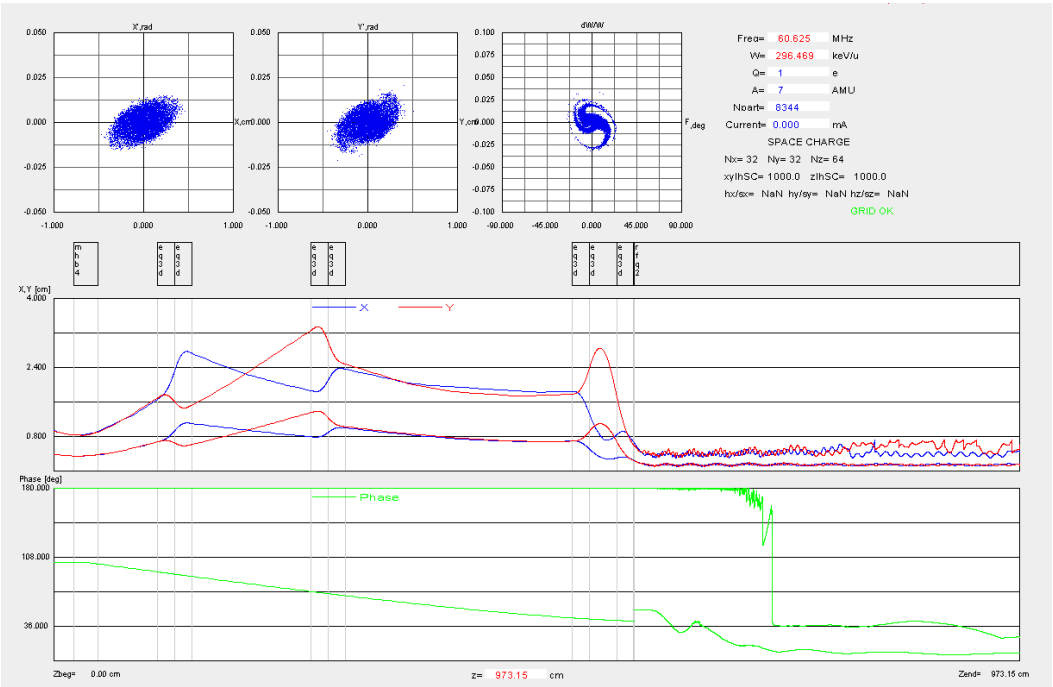

- Note the axis symmetric beam at the RFQ exit on the right

RFQ Beam Dynamics: Tracking using Full 3D Fields

- The Full 3D field distribution was exported from MW-Studio into TRACK as a single cavity
- Despite the low precision of the single cavity 3D fields we were able to get very similar beam dynamics as the cell by cell 3D fields simulation.

Quantity	EM-Studio Cell by Cell	MW-Studio Full RFQ
W-output (keV/u)	296.5	296.5
Transmission (%)	83 %	79%
Long. RMS π deg.keV/u	18.6	22.4
Trans. RMS π mm.mrad	0.215	0.22
Output Beam	Symmetric	Almost symmetric

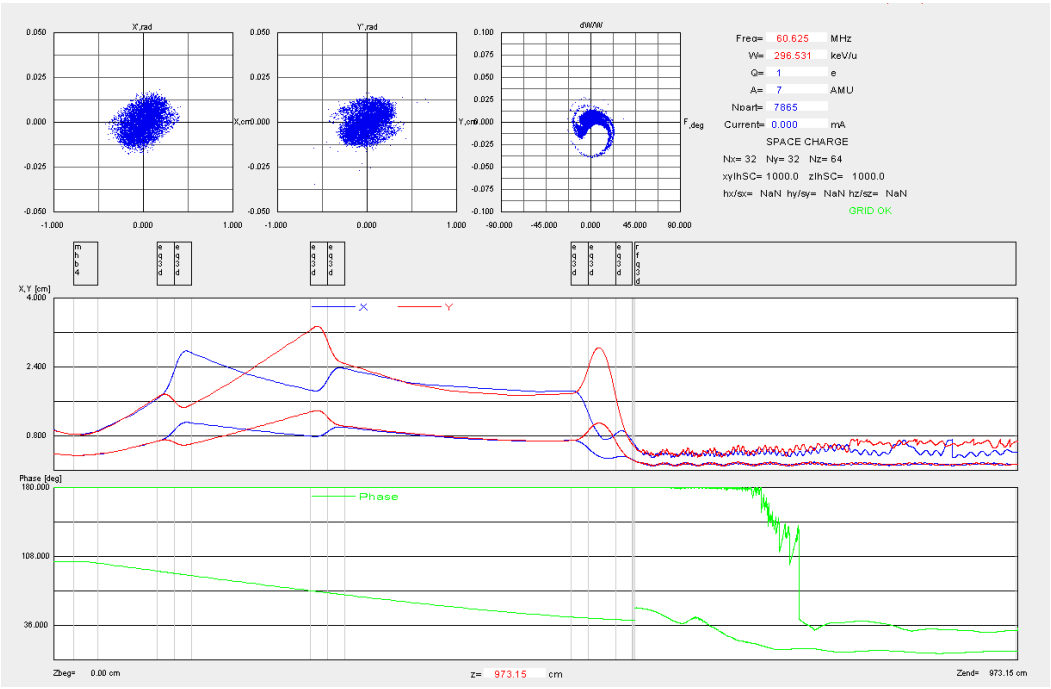

- The lower transmission and the larger longitudinal emittance may be due to the lower precision of the 3D fields extracted for the Full model (mesh limitation).

Displacement & Frequency Results

- Vane tip distortions are less than 54 microns
- Frequency shift is -29.7 kHz

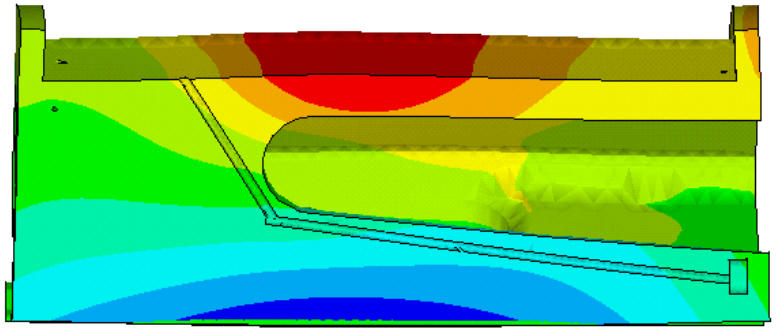

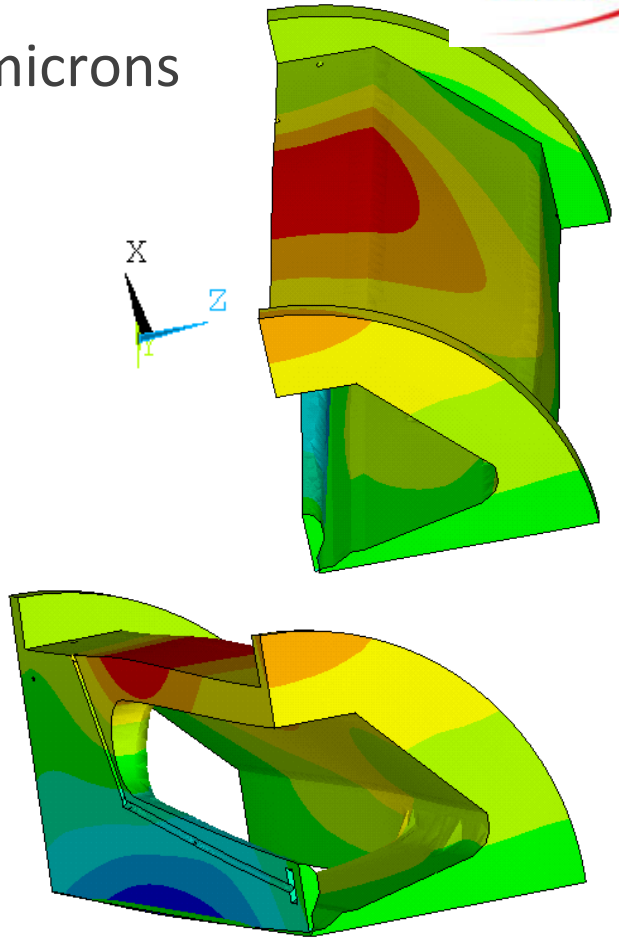

Vertical Displacements inches

-.575e-3 -.448e-3 -.321e-3 -.193e-3 -.662e-4 .611e-4 .188e-3 .315e-3 .443e-3 .570e-3

RFQ Fabrication: Components for Each Segment

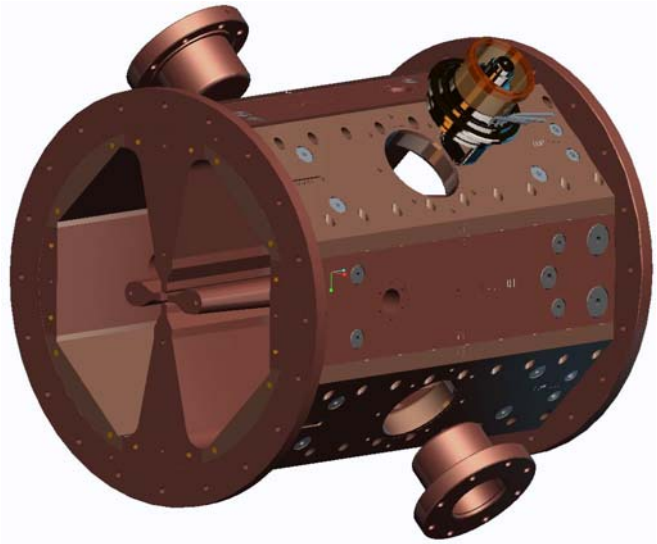

Exploded View RFQ segment

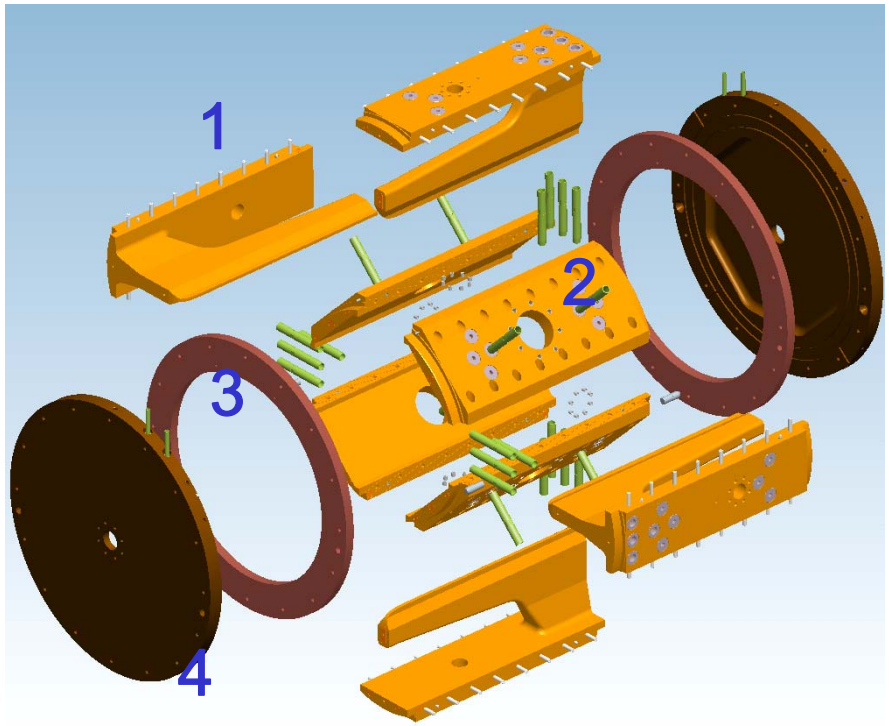

1. Vanes (4)
2. Quadrant Plates (4)
3. Body Flanges (2)
4. End Caps (2)

Fabrication Procedure

- **Forging OFE copper to near-net-shape;**
- **Rough machining components;**
- **Drilling coolant passages;**
- **Brazing coolant passage plugs & SS inserts. Hydrotests of the cooling channels (150 atm.);**
- Finish machining components. Modulation of vane tips;
- Pre-braze assembly to check fit and frequency;
- Brazing segment and vacuum test;
- Final machining.

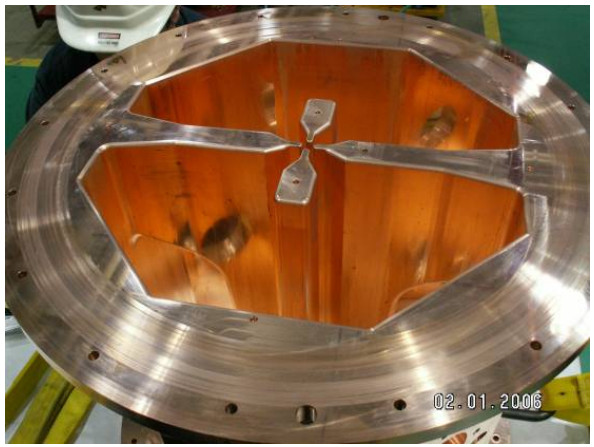

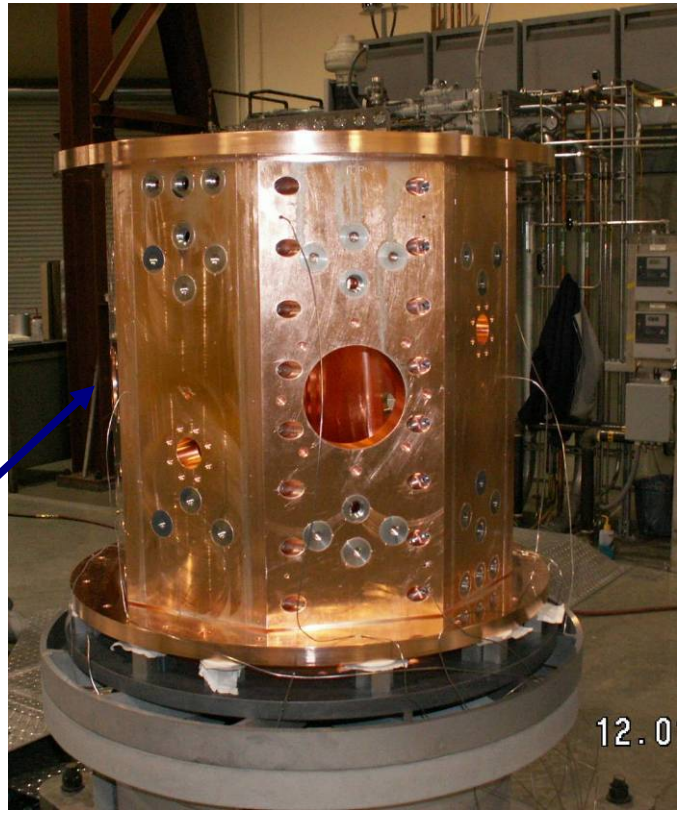

Brazing, Step I

- Vane blocks and quadrants are ready for the first brazing step: water plugs and SS inserts for cooling tubes

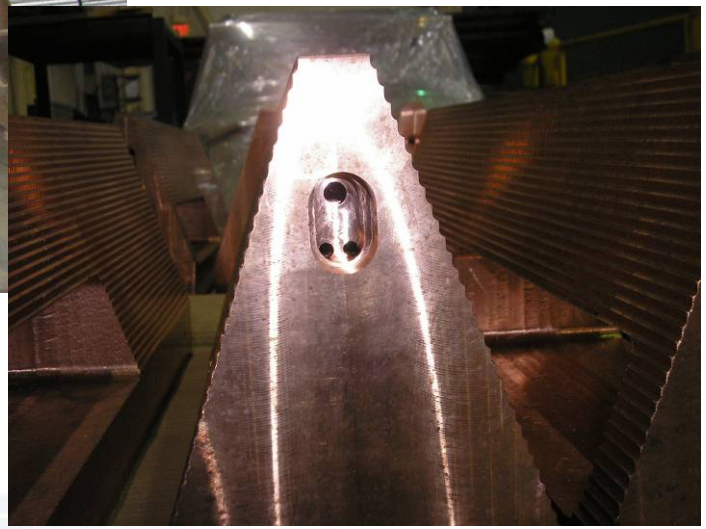

Resonance Control Cooling System

- RFQ body temperature is dynamically regulated by mixing chilled water from the external system and hot water of the RFQ body. Temperature of vanes is constant.

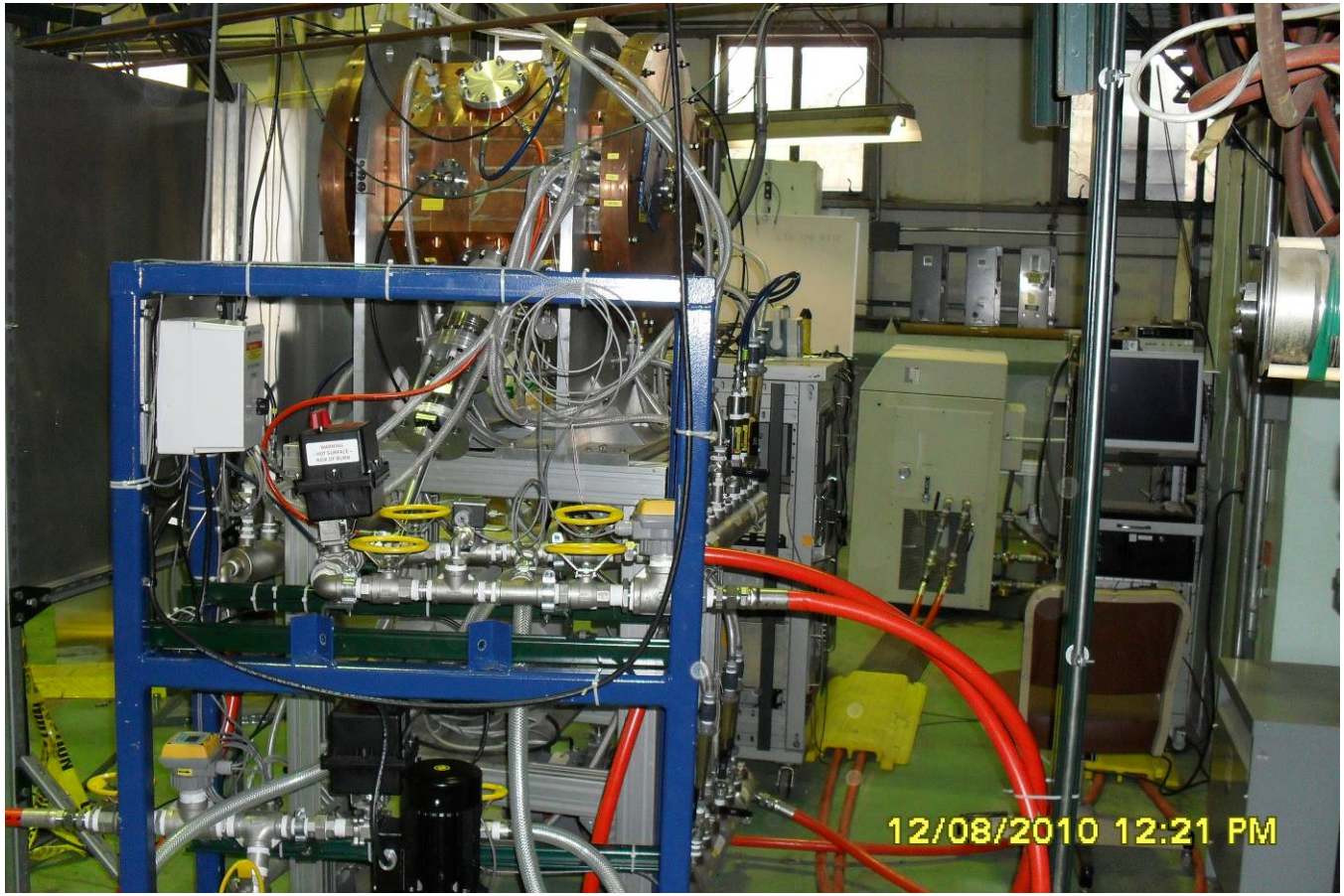

RFQ Phase Control (preliminary, being tested)

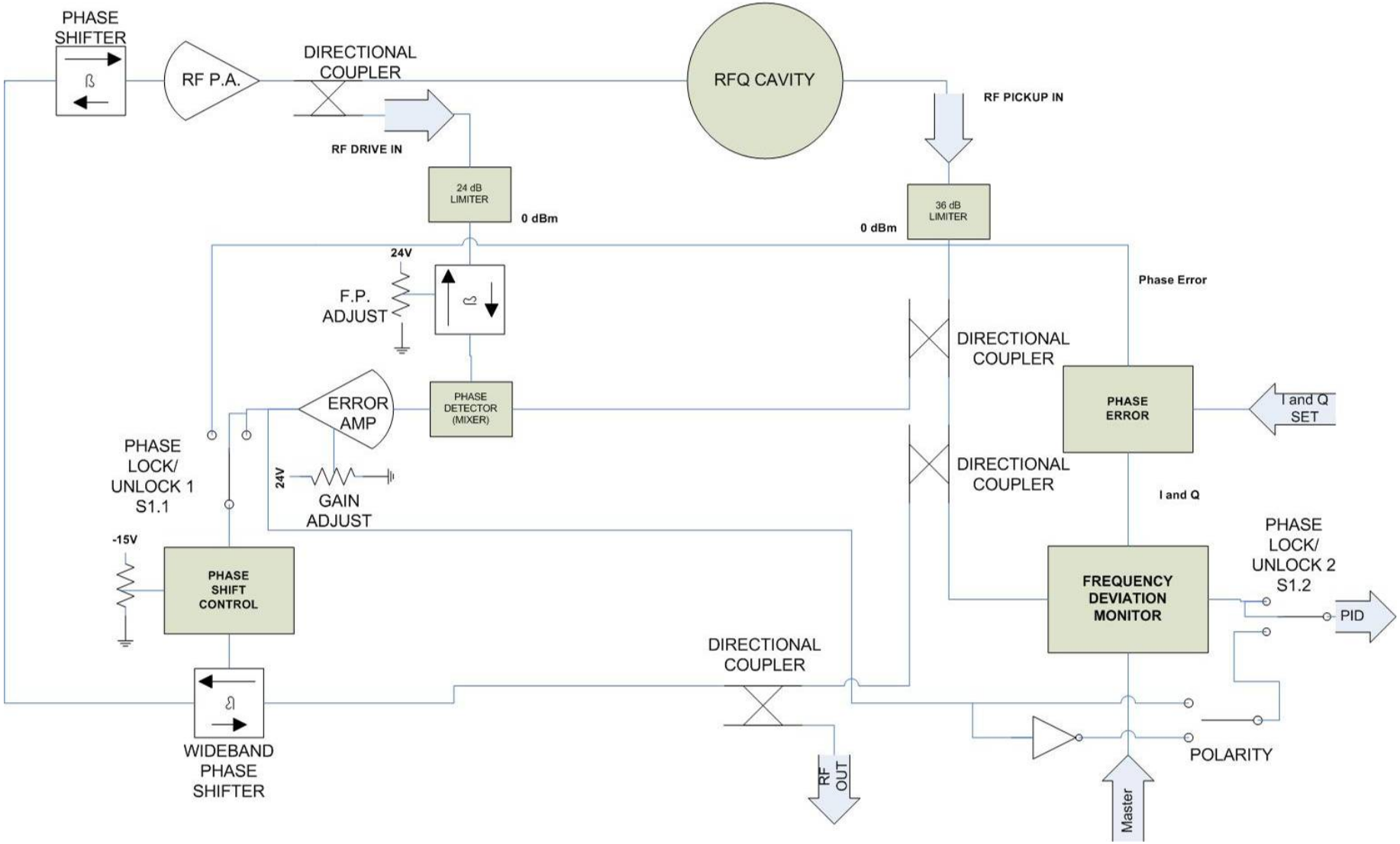

Summary on RFQ: Design and Fabrication Features

- A 4-vane structure with windows: reduces transverse dimensions to 18” and moves neighboring frequencies by ~11 MHz
- A very short exit radial matcher with the length of $0.8\beta\lambda$ forms an axially-symmetric beam for injection into the SC cryomodule with solenoidal focusing.
- Low longitudinal emittance, external multi-harmonic buncher
- Beam Dynamics: Full 3D in TRACK (8-term potential), EMS, MWS and Particle Studio
- The effective shunt impedance is increased by 40% by introducing a trapezoidal shape to the vane modulation in the accelerating section instead of a traditional sinusoidal modulation;
- Optimized cooling to reduce frequency sensitivity to RF power
- Fabrication technology: OFE copper, 2-step high-temperature furnace brazing

Off-line Beam Commissioning

- Scheduled – March 2013
- Expected – January 2012

Will be commissioned using:

- ≈ 30% of nominal RF power (≈ 20 kW)
- ~ 1 mA DC He^{2+} ion beam extracted from ECR
- 2 mA proton beam is also available

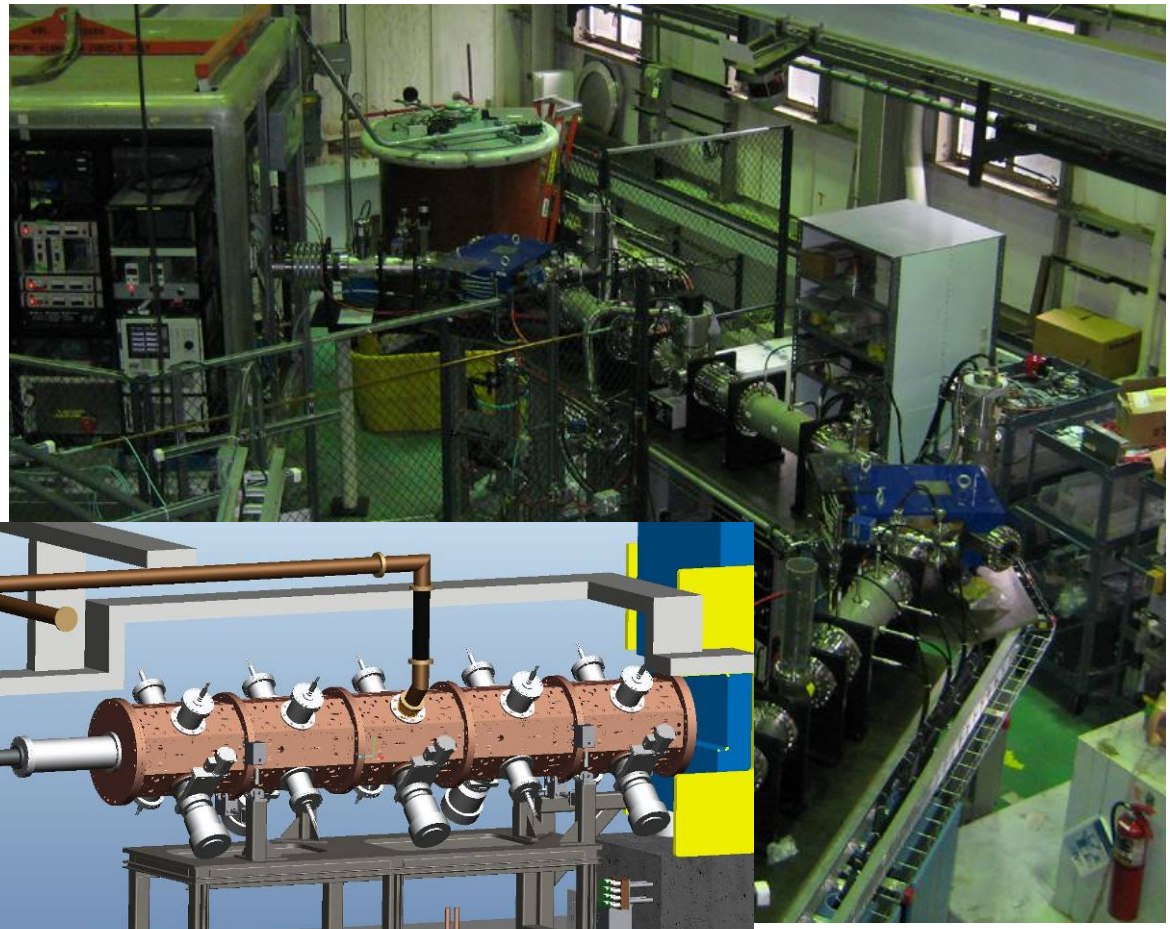

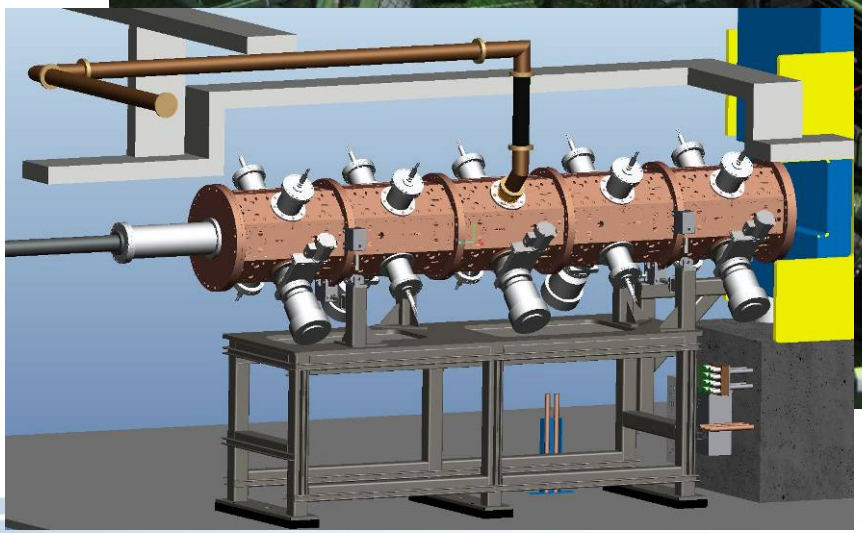

General Layout for the Project X Front End

- RFQ – 162.5 MHz
- 9 Half Wave Resonators (HWR) – 162.5 MHz

Advantages of 162.5 MHz vs 325 MHz

- RFQ
  - Lower RF power, ~130 kW at 80 kV
  - Much lower power density on the cavity RF surface
  - Larger transverse acceptance, by factor of 4
- MEBT – Choppers
  - Longer time interval between bunches – rise/fall time for the chopper
  - Longer drift spaces are available for the chopper plates
- SC section
  - Higher voltage per cavity
  - Only 9 SC HWRs are required to achieve 10 MeV
  - Weaker RF defocusing – a solenoid per 2 cavity is acceptable
  - Only 5 SC solenoids are required
  - Short cryomodule, ~ 4 meters
- Significant cost saving for the SC section

RFQ fabrication technology is similar to ATLAS RFQ

- OFE copper, furnace brazed in hydrogen atmosphere
- 4-vane, 4-segments
- Total length – 4 m
- The same technology as for the ATLAS Upgrade RFQ (ANL)

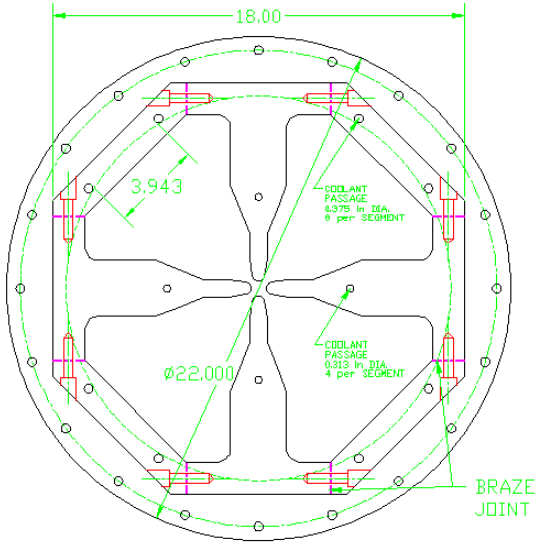

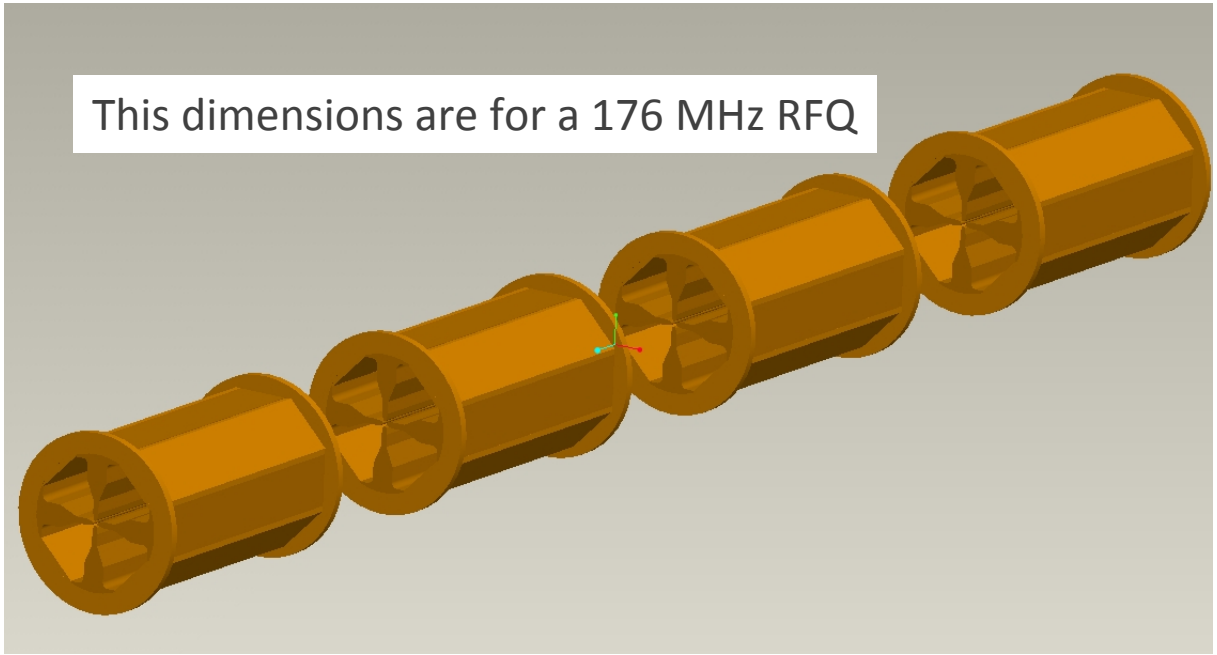

Preliminary parameters for the 162.5 MHz HWRs

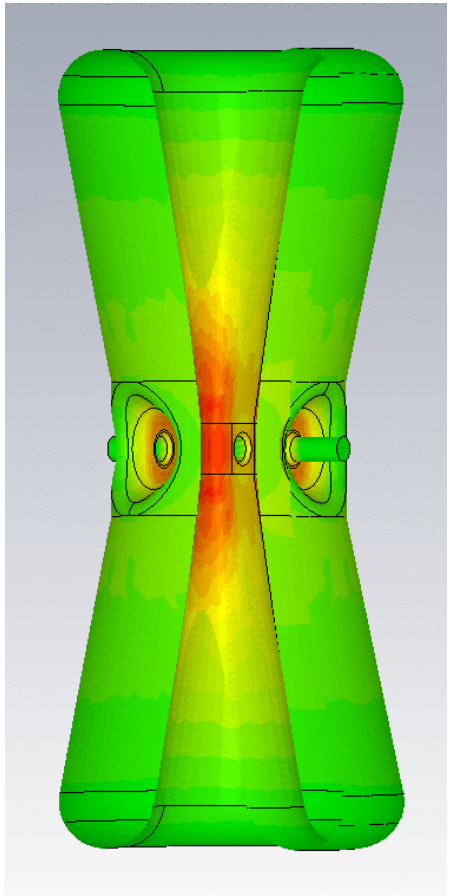

Preliminary MWS model

162.5 MHz HWR	
β_G	0.095
Peak electric field, MV/m	40
Peak magnetic field, mT	70
Voltage gain at β_G , MV	1.4
Aperture diameter, mm	30
Number of cavities for Project X	9

Cryomodule with 9 HWRs, 162.5 MHz, and 5 SC solenoids

- Cryomodule length ~4 meters

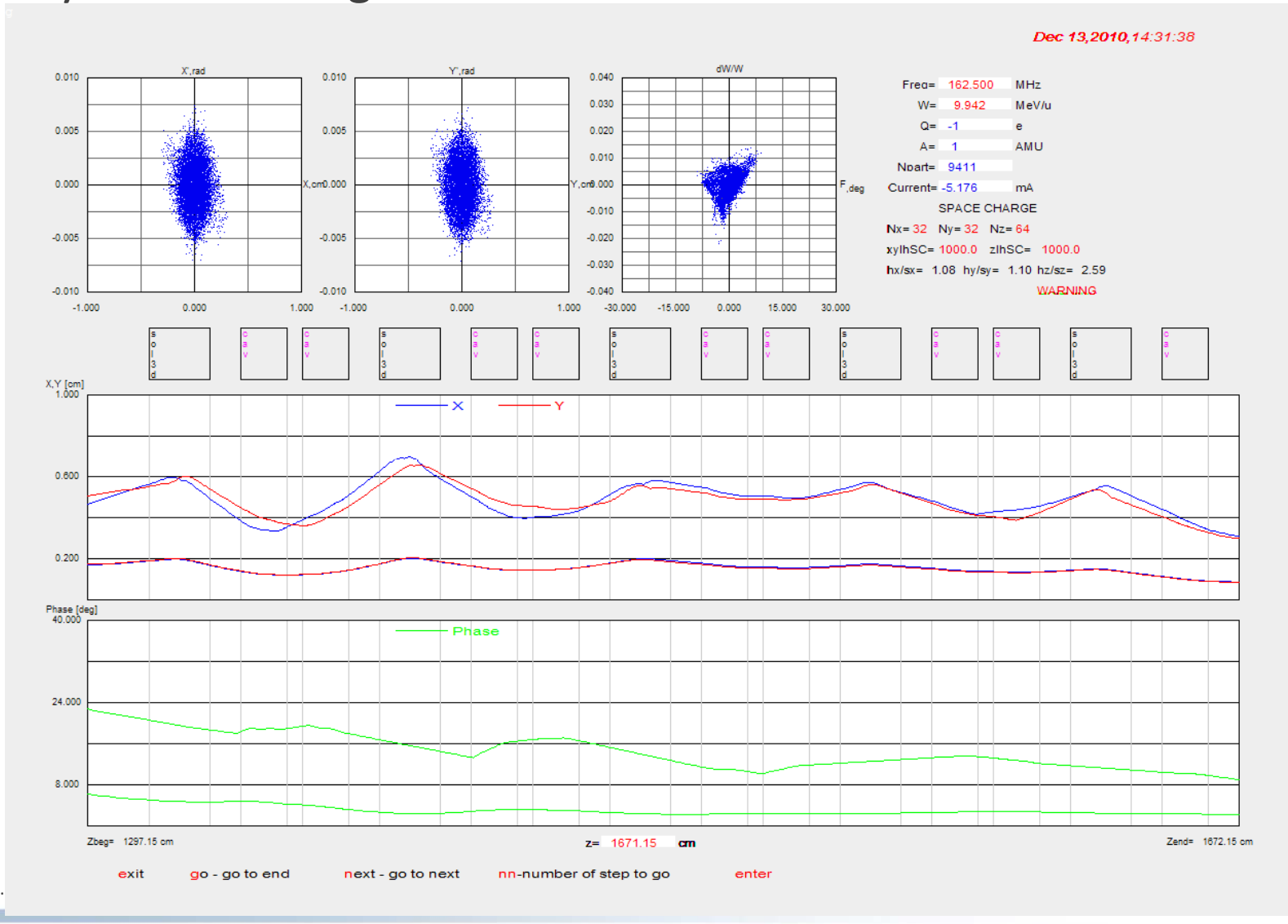

New Low Frequency QWR for ATLAS Upgrade

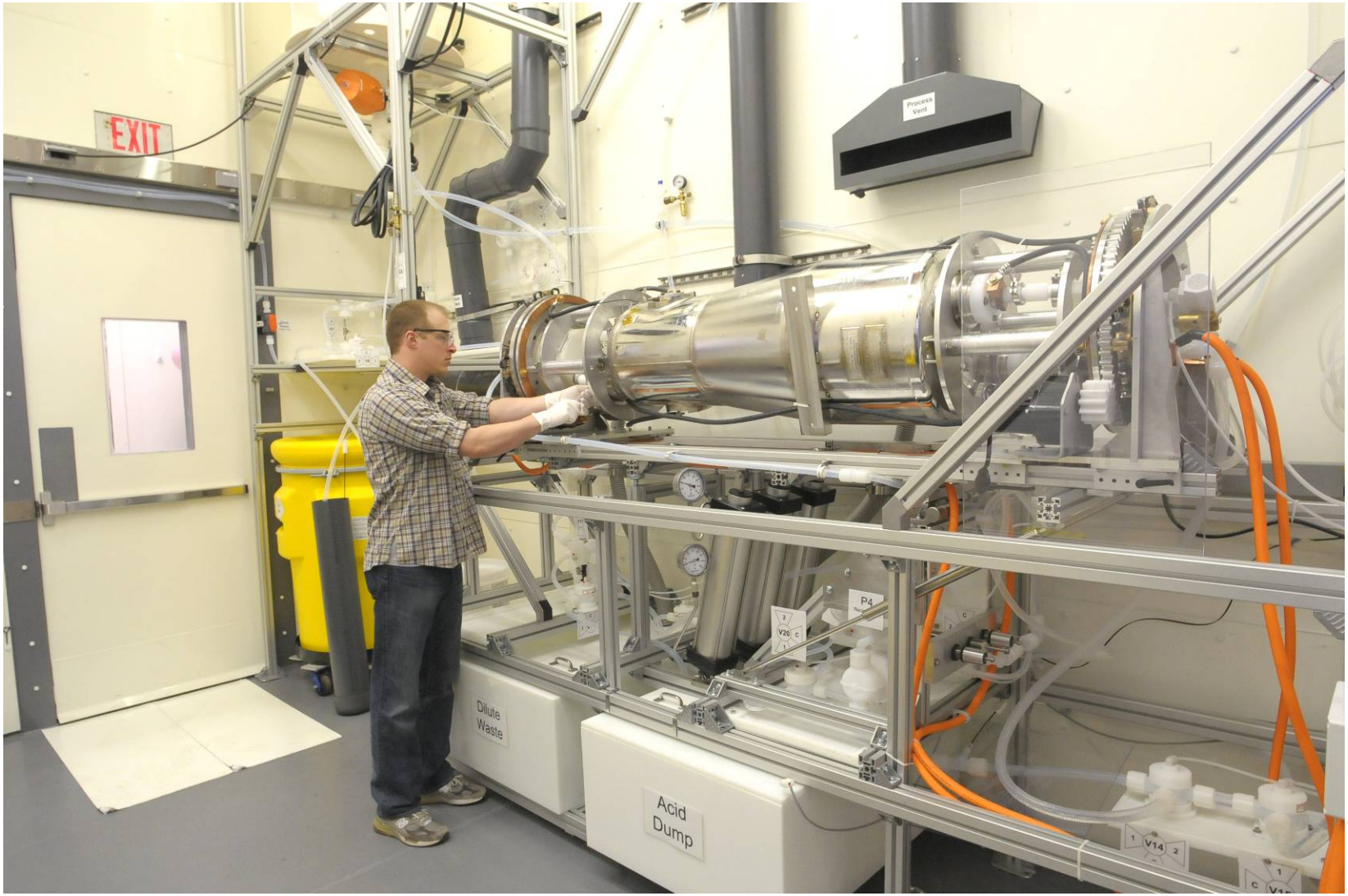

Initial Cold Test Results of the First Prototype Cavity

- Peak fields are at the level of ILC specs

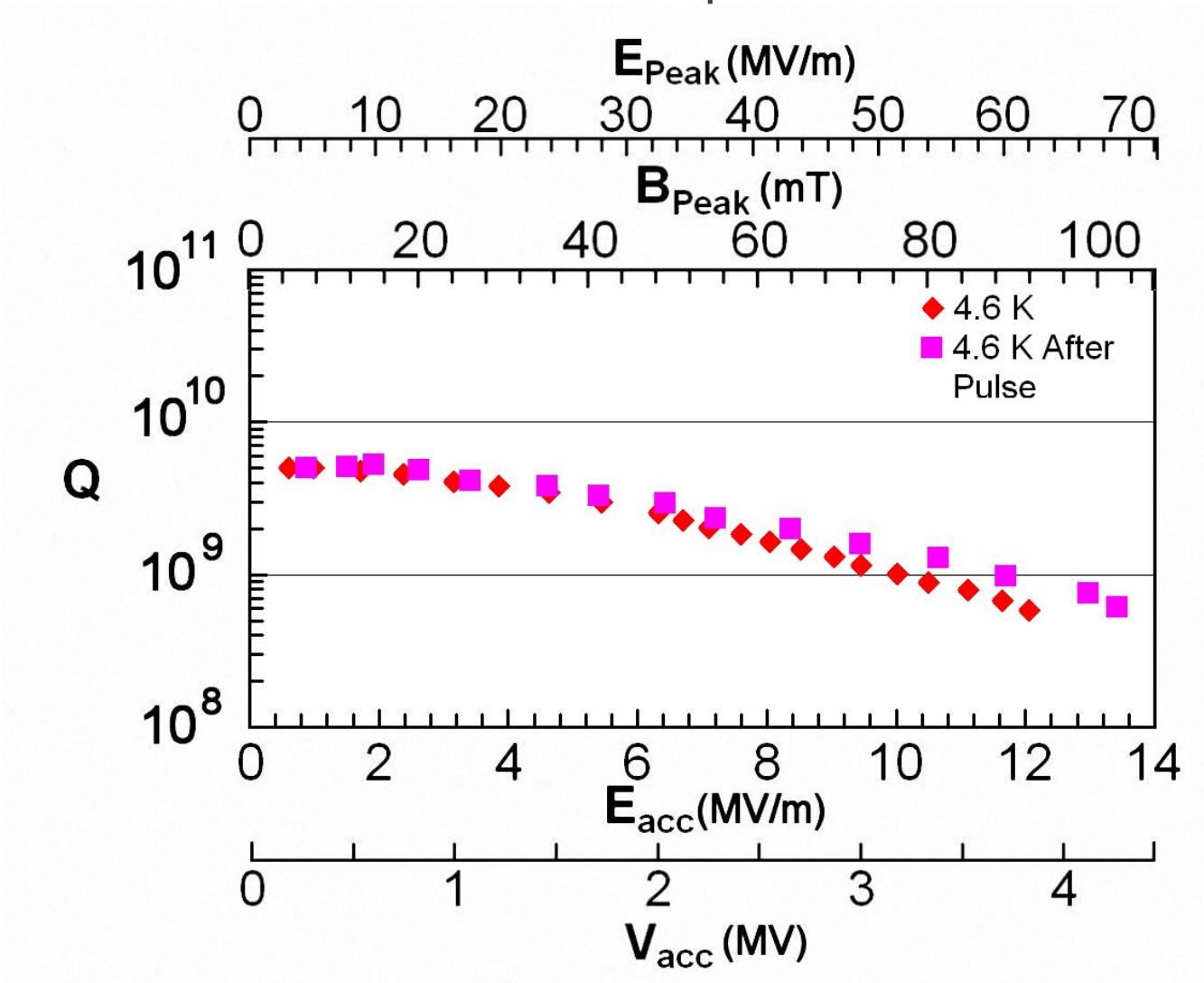

Initial Cold Test Results

- Initial cold test results at T=4.6 K show remarkably good performance, easily exceeding the ATLAS requirements.

Parameter	Design	Measured
Frequency, MHz	72.760	72.756
Voltage, MV	2.5	4.3
E_{PEAK} , MV/m	40	69
B_{PEAK}, mT	60	105
Q_0 at 4.5K for 2.5 MV voltage	10^9	$2 \cdot 10^9$
$\Delta f/\Delta P$, Hz/Torr	-1.6 (ANSYS)	-2.6

Beam Dynamics for Project X up to 155 MeV

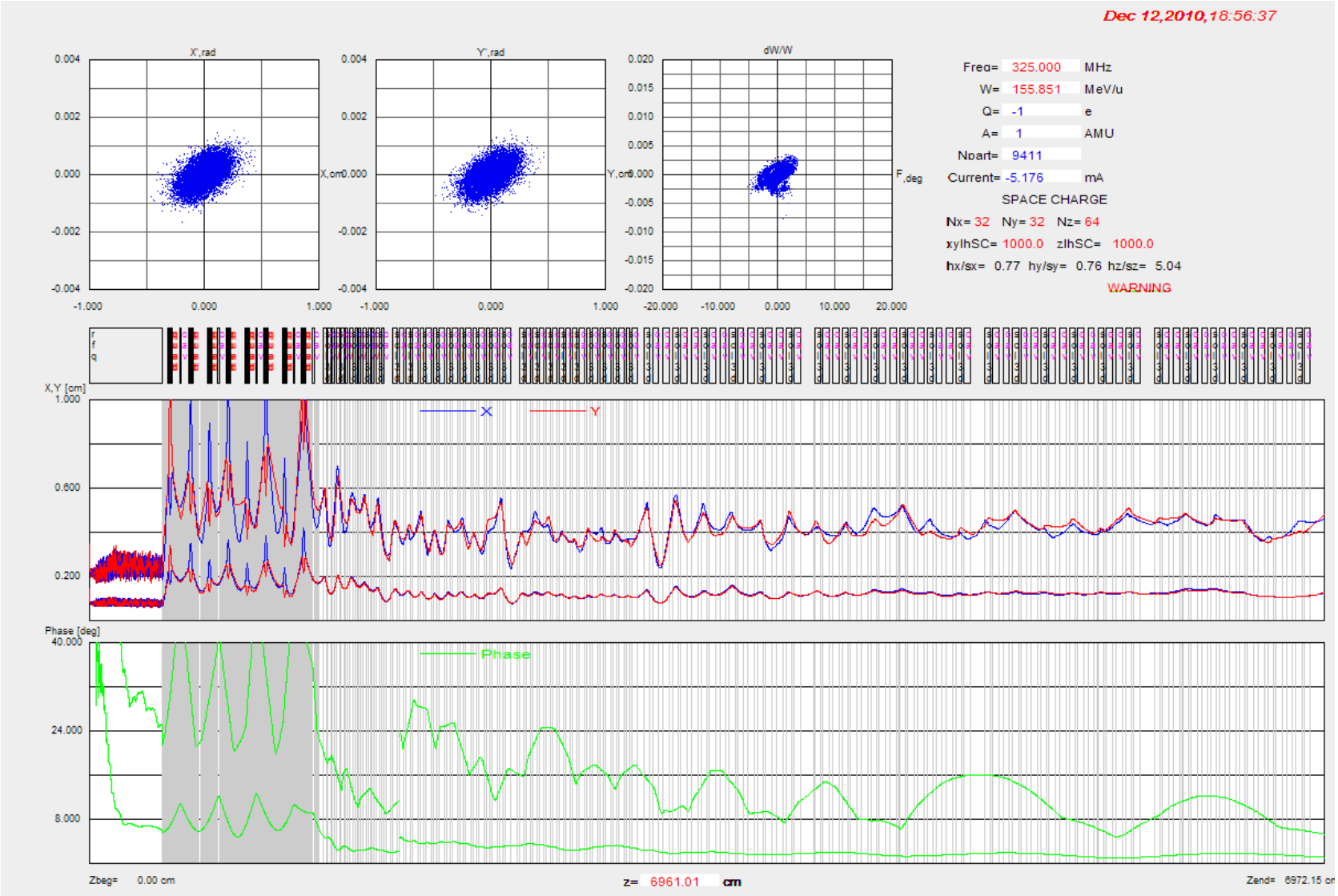

Summary

- The ATLAS upgrade includes the development of a CW normal conducting RFQ and a SC cryomodule with low-beta QWRs. Installation and commissioning is scheduled in the second quarter of FY2013.
- RFQ will be commissioned off-line one year ahead of the schedule
- The design of the system was developed for the acceleration of up to ~2 mA beam current even though such high current is not required for ATLAS
- ANL developments can be directly applied for the Project X Front End including SC TEM-class cavities