REV.	DESCRIPTION	DRAWN	DATE
		APPD.	DATE
A			

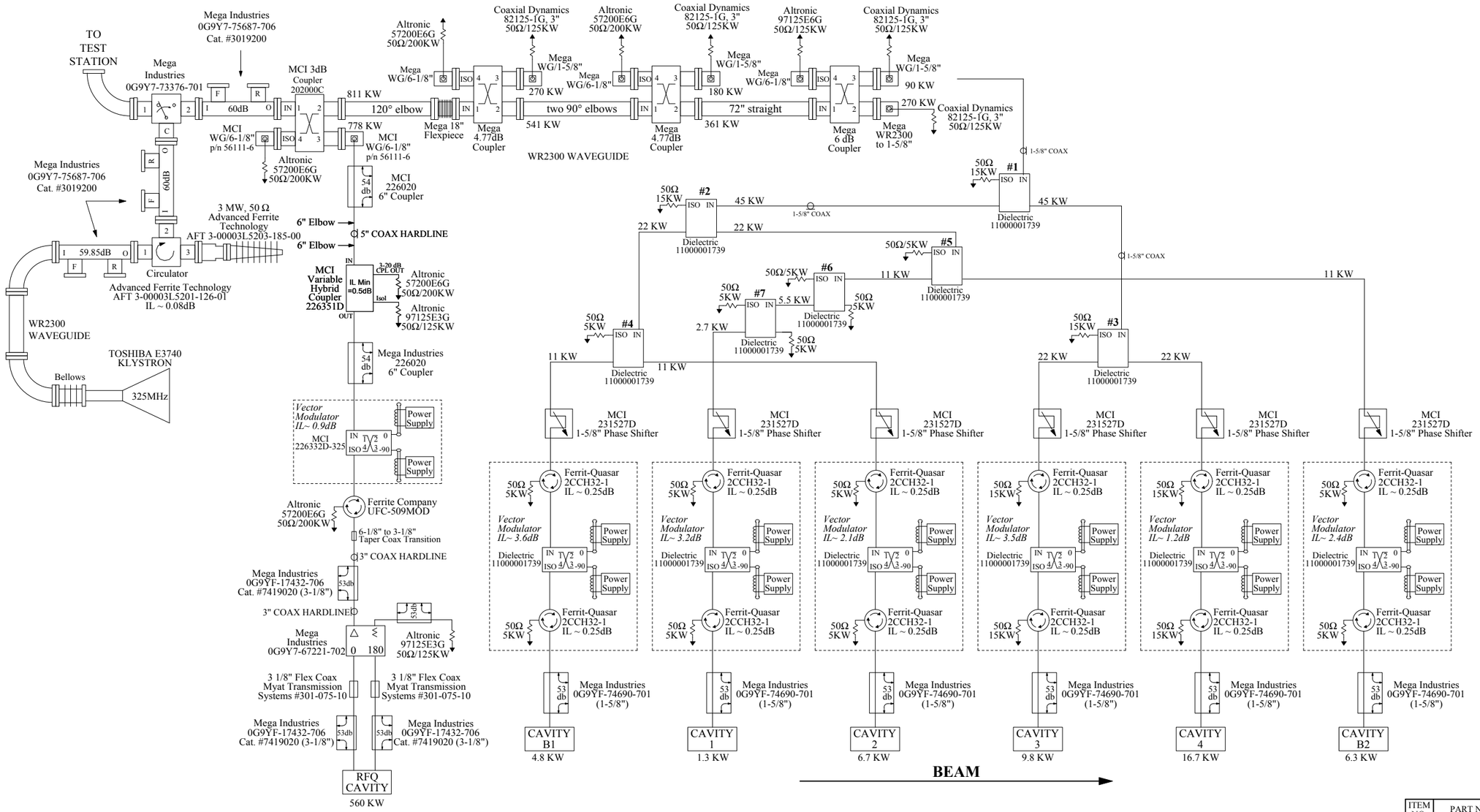

11/15/10

5 KW Loads = Coaxial Dynamics, Model 86006-1 (1-5/8")
15 KW Loads = Altronics, Model 9715E1G or Coaxial Dynamics, Model 86017-1 (1-5/8")

ITEM NO.	PART NO.	DESCRIPTION OR SIZE	QTY. REQ.
PARTS LIST			

UNLESS OTHERWISE SPECIFIED			ORIGINATOR	RALPH PASQUINELLI	12/17/08
FRACTIONS	DECIMALS	ANGLES	DRAWN	WESLEY MUELLER	2/12/09
+/-	+/-	+/-	CHECKED		
			APPROVED		

1. BREAK ALL SHARP EDGES 1/64 MAX
2. DO NOT SCALE DRAWING
3. DIMENSIONING IN ACCORD WITH ANSI Y14.5 STD'S

√ MAX. ALL MACHINED SURFACES

USED ON

MATERIAL-

FERMI NATIONAL ACCELERATOR LABORATORY
UNITED STATES DEPARTMENT OF ENERGY

HINS 325 MHz SIX CAVITY RF DISTRIBUTION

SCALE	FILMED	DRAWING NUMBER	REV.