Project X: Status, Strategy, Meeting Goals

Steve Holmes

Project X Collaboration Meeting

September 8, 2010

Outline

- U.S./Fermilab Strategic Plan
- Update on Activities of the Last Year
- Project X Goals and Initial Configuration-2
- RD&D Plan
- Collaboration Status
- Meeting Goals, Agenda, and Organization

Our websites:

http://projectx.fnal.gov

http://projectx-docdb.fnal.gov

Meeting website:

http://projectx.fnal.gov/sep_10_collab_mtg.shtml

Fermilab Strategic Plan

The U.S. strategy for elementary particle physics over the coming decades has been developed by the P5 sub-panel and endorsed by HEPAP. Fermilab is fully aligned with this strategy.

⇒ ***The Fermilab strategy is to mount a world-leading program at the <u>intensity frontier</u>, while using this program as a bridge to an <u>energy frontier</u> facility beyond LHC in the longer term.***

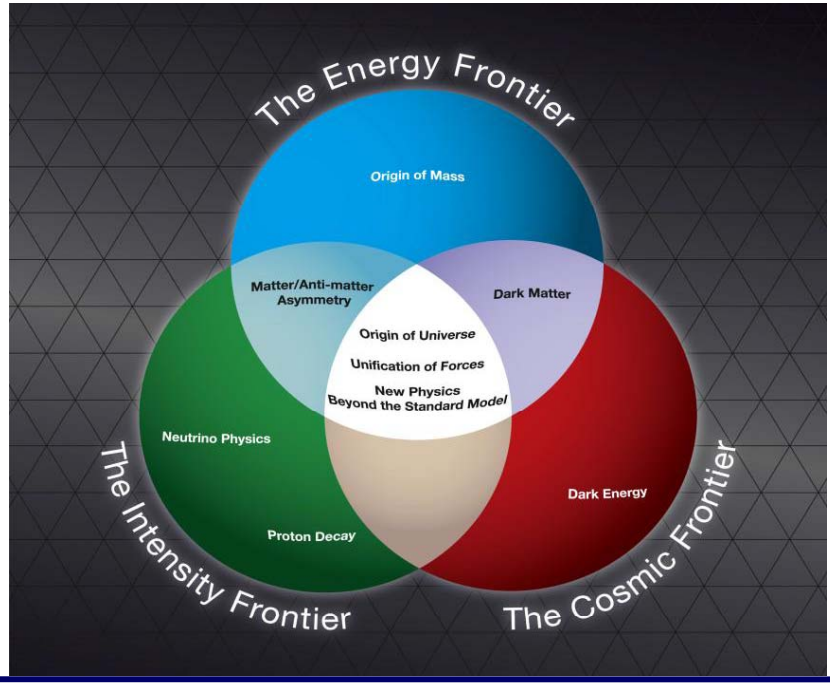

Evolution of the Fermilab Accelerator Complex

- A multi-MW Proton Source, Project X, is the linchpin of Fermilab's strategy for future development of the accelerator complex.
- Project X provides long term flexibility for achieving leadership on the intensity and energy frontiers
  - Intensity Frontier:
    NuMI→ NOνA→ LBNE/mu2e→ Project X → Rare Processes → NuFact
    - Continuously evolving world leading program in neutrino and rare processes physics; opportunities for applications outside EPP
  - Energy Frontier:
    Tevatron → ILC or Muon Collider
    - Technology alignment
    - Fermilab as host site for ILC or MC

Mission

- A neutrino beam for long baseline neutrino oscillation experiments
  - 2 MW proton source at 60-120 GeV
- High intensity, low energy protons for kaon and muon based precision experiments
  - Operations simultaneous with the neutrino program
- A path toward a muon source for a possible future Neutrino Factory and/or a Muon Collider
  - Requires ~4 MW at ~5-15 GeV .

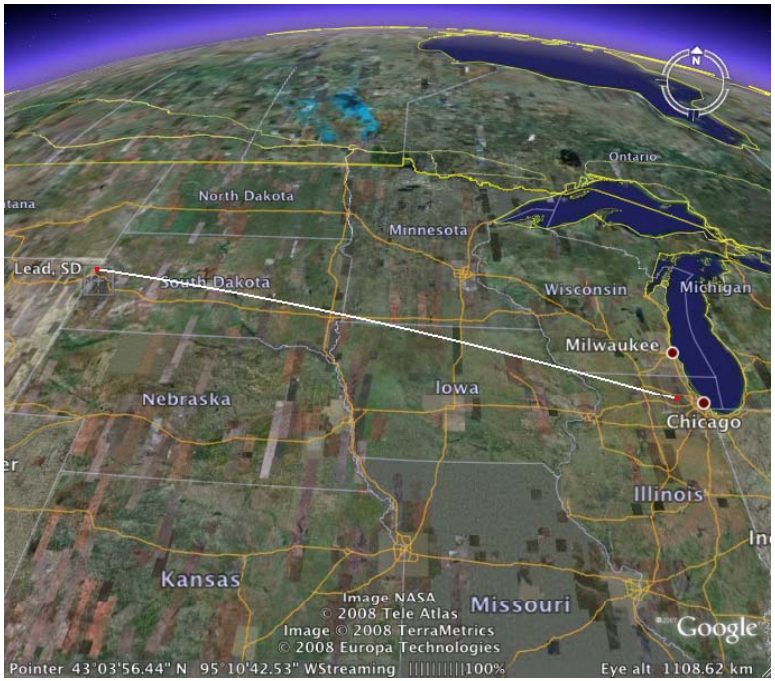

- Possible non-HEP missions under consideration
  - Nuclear physics and ADS development

News Since the September 2009 Meeting

- Initial Configuration-2 established as preferred configuration
  - First discussed in last year's meeting
  - This has triggered the start of R&D spending, including the initial releases of funding to collaborators
  - Functional Requirements Specification (FRS) released (draft)
- CD-0 for LBNE and Mu2e experiments
  - New intensity frontier initiatives
- Integration of PX, SRF, and HINS activities at Fermilab
  - Successful testing of first two superconducting spoke resonator cavities
- Development of the India Collaboration
  - Fermilab-Indian Institutions MOU on high intensity proton accelerator R&D
- ICD-2v2, accompanying R&D plan, RLS, and cost estimate in preparation
- Project X Friday meeting now available for participation via webex

News Since the September 2009 Meeting

- DOE Science & Technology Review
  - "The Project X machine design is sufficiently well developed for the pre-CD0 stage."
  - "The physics program for Project X is not well defined at this time. The scientific community should be engaged in defining the potential program."
- Five Physics/Experiments Task Forces established

  Neutrinos
  Kaons
  Muons
  Nuclear Physics
  Nuclear Energy

  Goal: define an initial experiment in each area
  Fall workshops
- ARRA
  - Significant investment in SRF infrastructure at Fermilab and development of domestic vendors
- New Fermilab Associate Director for Accelerators – Stuart Henderson

Initial Configuration 1 → 2

- Initial Configuration-1 was based on an 8 GeV, superconducting, pulsed linac strongly aligned with ILC
  - Strong capabilities in support of the neutrino mission, but…
  - Does not provide a strong platform for mounting a low energy rare processes program
    - Difficulties providing high beam power/high duty factor beam
    - Difficulties supporting multiple users with differing spill structure requirements
- Initial Configuration-2 addresses the deficiencies in IC-1 through incorporation of a CW linac
  - Solves the slow spill limitations in IC-1 by eliminating slow spill
  - Physics workshop (November 2009) identified 3 GeV as an appropriate energy and also established bunch configuration requirements.

Initial Configuration-2

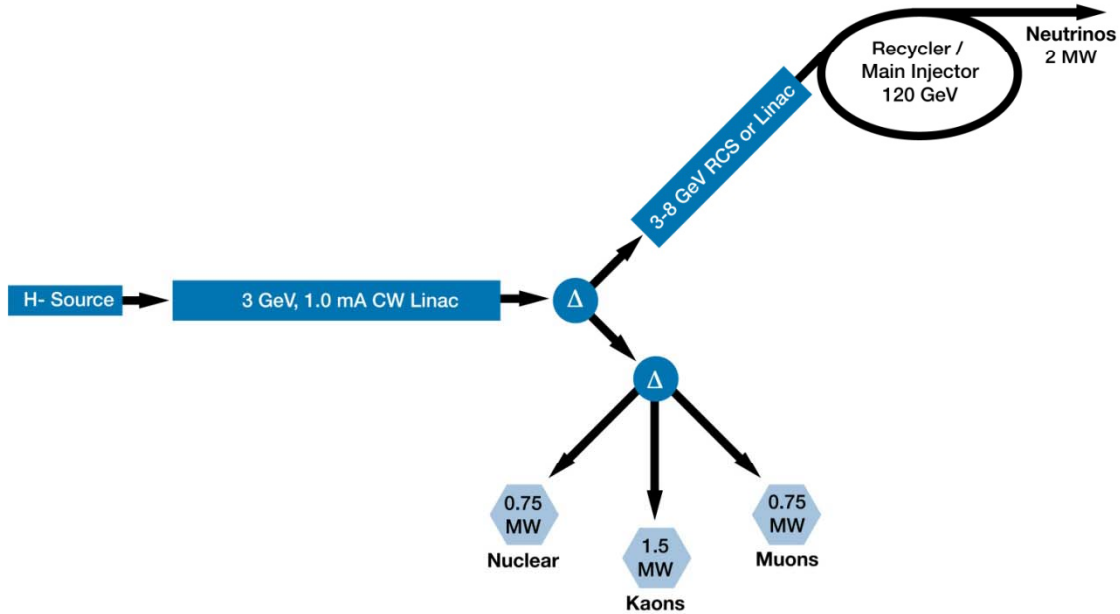

- 3 GeV, 1 mA, CW linac
- Greatly enhanced capabilities in the rare processes program
  - MW class beam power to multiple experiments with variable bunch configurations, simultaneous with neutrino operations
- Self-consistent concept with RCS for 3-8 GeV acceleration
  - Pulsed linac preferred, assuming it can be made to work and is cost effective

Initial Configuration-2
Project X Goals

- Construct a 3 GeV continuous-wave superconducting H- linac, capable of delivering 1 mA of average beam current.
  - Supports rare processes and nuclear physics programs
  - Can support ADS development with beams energy <2 GeV
- Construct a 3-8 GeV pulsed linac, utilizing an ILC-style RF system, with total beam power delivered to 8 GeV ovf 300 kW.
  - Required for the neutrino program
  - Establishes a path toward a muon based facility
- Upgrade the Recycler and Main Injector to provide ≥ 2 MW to a neutrino production target at 60-120 GeV.
  - Supports the long baseline neutrino program
- Simultaneous operations of the rare processes and neutrino programs

Initial Configuration-2
Functional Requirements

Requirement	Description	Value
L1	Delivered Beam Energy, maximum	3 GeV
L2	Delivered Beam Power at 3 GeV	3 MW
L3	Average Beam Current (averaged over >1 μsec)	1 mA
L4	Maximum Beam Current (sustained for <1 μsec)	10 mA
L5	The 3 GeV linac must be capable of delivering correctly formatted beam to a pulsed linac, for acceleration to 8 GeV	
L6	Charge delivered to pulsed linac	26 mA-msec in < 0.75 sec
L7	Maximum Bunch Intensity	1.9×10^{8}
L8	Minimum Bunch Spacing	3.1 nsec (1/325 MHz)
L9	Bunch Length	<50 psec (full-width half max)
L10	Bunch Pattern	Programmable
L11	RF Duty Factor	100% (CW)
L12	RF Frequency	325 MHz and harmonics thereof
L13	3 GeV Beam Split	Three-way
P1	Maximum beam Energy	8 GeV
P2	The 3-8 GeV pulsed linac must be capable of delivering correctly formatted beam for injection into the recycler (or Main Injector).	
P3	Charge to fill Main Injector/cycle	26 mA-msec in <0.75 sec
P4	Maximum beam power delivered to 8 GeV	300 kW

Initial Configuration-2
Functional Requirements

Requirement	Description	Value
M1	Delivered Beam Energy, maximum	120 GeV
M2	Delivered Beam Energy, minimum	60 GeV
M3	Beam Power (60-120 GeV)	> 2 MW
M4	Beam Particles	Protons
M5	Beam Intensity	1.6×10^{14} protons per pulse
M6	Beam Pulse Length	9.5 μsec
M7	Bunches per Pulse	504
M8	Bunch Spacing	18.8 nsec (1/53.1 MHz)
M9	Bunch Length	<2 nsec (fullwidth half max)
M10	Pulse Repetition Rate (120 GeV)	1.333 sec
M11	Pulse Repetition Rate (60 GeV)	0.75 sec
I1	The 3 GeV and neutrino programs must operate simultaneously	
I2	Residual Activation from Uncontrolled Beam Loss	<20 mrem/hour (average) <100 mrem/hour (peak) @ 1 ft
I3	Scheduled Maintenance Weeks/Year	4
I4	Operational Reliability	90%
I5	Facility Lifetime	40 years
U1	Provisions should be made to support an upgrade of the CW linac to support an average current of 4 mA.	
U2	Provisions should be made to support an upgrade of the Main Injector to support a delivered beam power of ~4 MW at 120 GeV.	
U3	Provisions should be made to deliver CW proton beams as low as 1 GeV	
U4	Provision should be made to support an upgrade to the CW linac such that it can accelerate Protons	

Initial Configuration-2
Provisional Siting

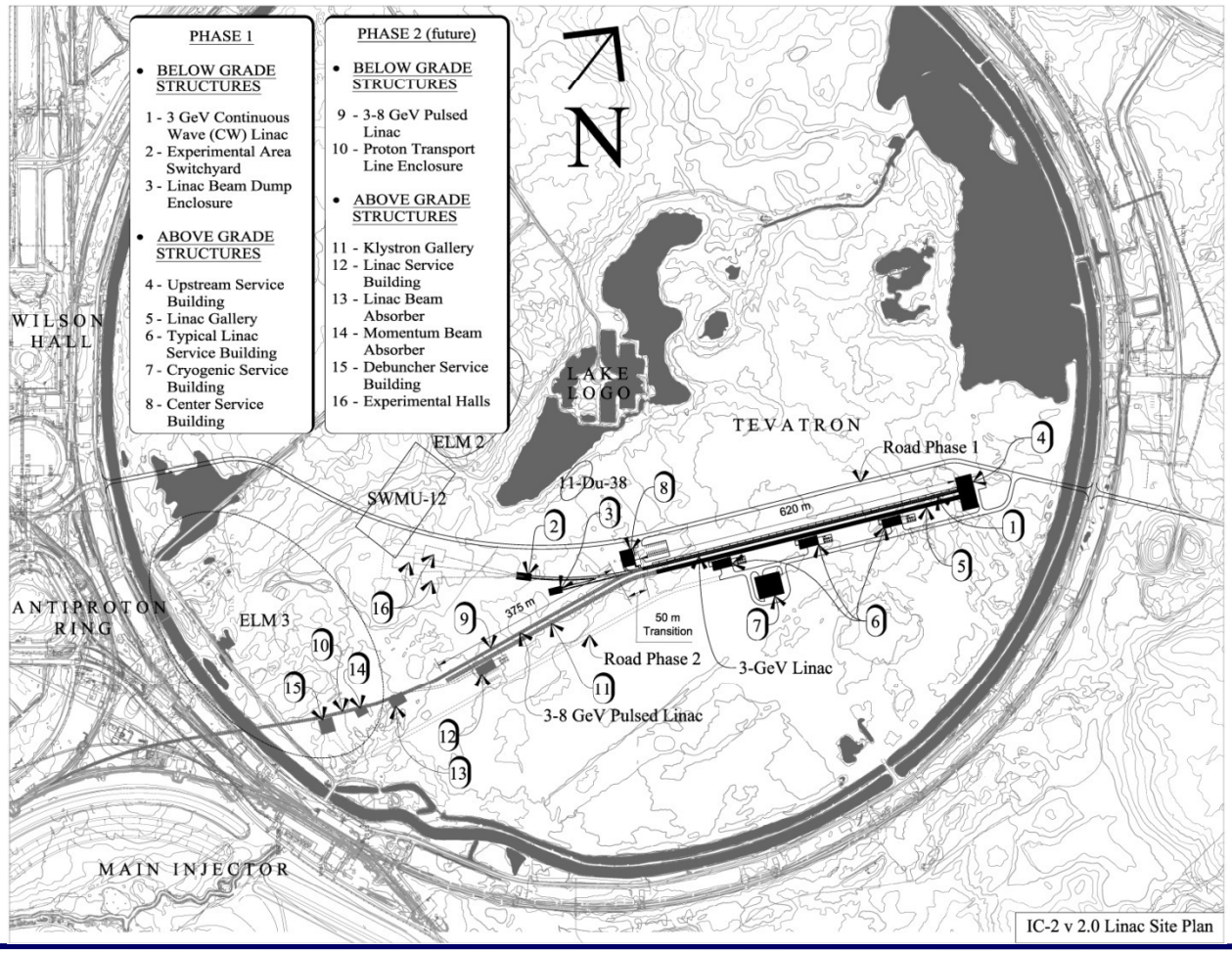

Initial Configuration-2
Provisional Siting

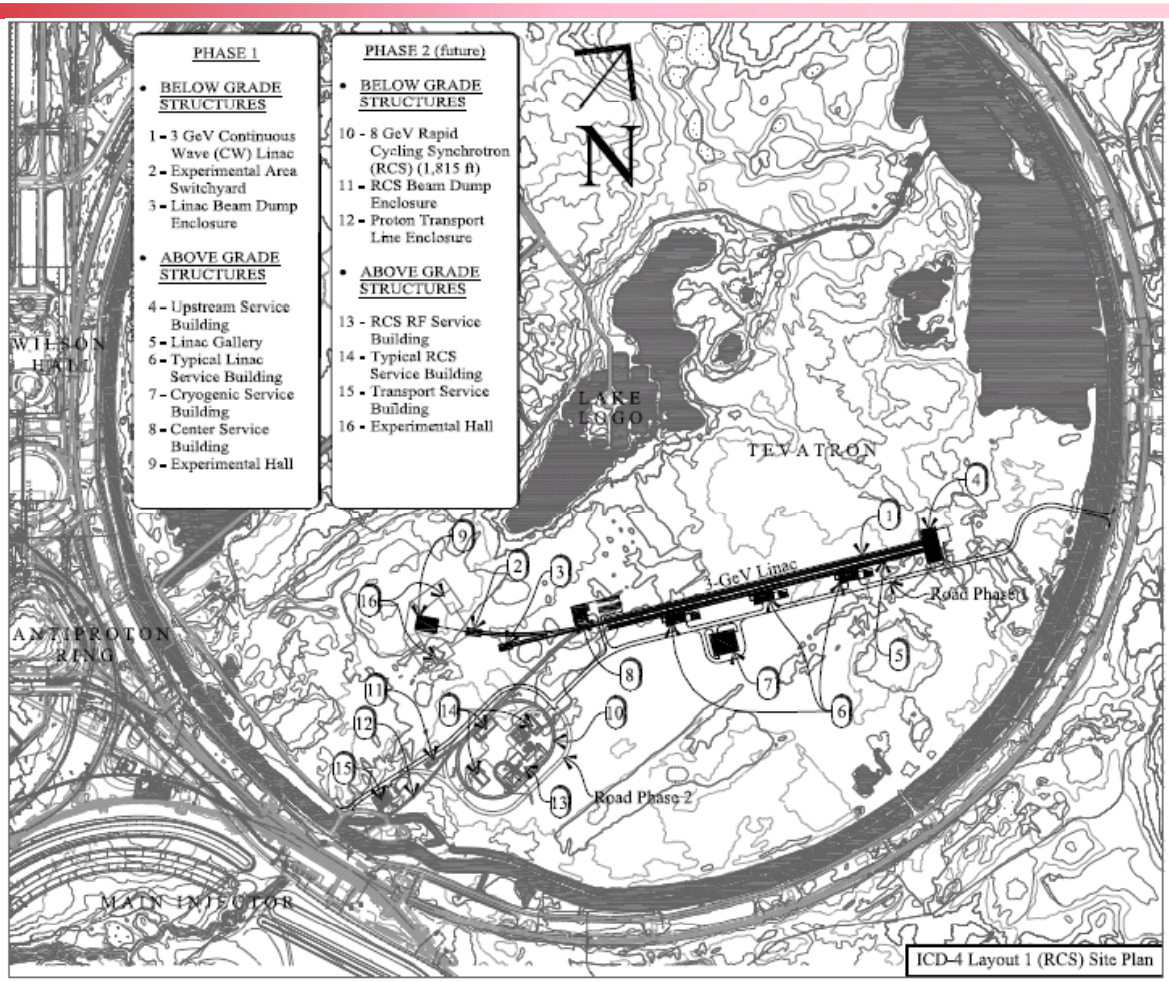

Technical Issues
(for discussion at this meeting)

- Discussions in the context for the Functional Requirements
  http://projectx-docdb.fnal.gov:8080/cgi-bin/ShowDocument?docid=658
- Configuration
  - Establish a self-consistent concept for acceleration from 3 to 8 GeV based on a pulsed linac with an ILC-style (1300 MHz) rf system
  - Explore the optimal set of operating frequencies in the CW linac
  - Explore the pluses and minuses of various cryogenic segmentation schemes
- Technical
  - Evaluate need for HOM dampers in the CW linac
  - Develop a strategy/requirements for microphonics control in the CW linac
  - Develop a better understanding of beam loss mechanisms (including intra-beam stripping) and mitigation strategies
  - Develop a self-consistent concept for H- injection into the first circular accelerator

RD&D Plan
Goals

- RD&D = Research, Design, and Development
- RD&D Plan corresponding to ICD-2
  - Updated to reflect the new configurations
  - Most recent version available at: http://projectx-docdb.fnal.gov:8080/cgi-bin/ShowDocument?docid=628
- Goals
  - Complete design of the Project X facility including all technical and conventional construction elements
  - Identification of key accelerator physics and engineering challenges and validation of performance of critical technology items
    - Simulations, experimentation, and prototype construction as appropriate
  - Development of an acquisition strategy for key technical elements, including development and qualification of vendors for critical components
  - Development of a technical/cost/schedule baseline for construction
  - Preliminary identification of performance upgrade paths

RD&D Plan
Scope/Deliverables

- Scope
  - All activities required to bring Project X from ICD-2v2 through final design (CD-3 in the DOE management system).
  - Integrates efforts funded directly by Project X and other superconducting rf development programs at Fermilab.
- Deliverables
  - Documentation required for CD-0, CD-1, CD-2, and CD-3
  - Supporting technical R&D required to validate the design and establish fabrication methods
- Assumed Critical Decision dates
  - CD-0: January 2011
  - CD-1: July 2012
  - CD-2: August 2013
  - CD-3: September 2014

Project X/ILC/SRF
Integrated Plan

- All srf programs at Fermilab are being integrated into a single, centrally managed program.
  - Effective FY2011
  - Brings all srf activities under the purview of the ILC/SRF Program Director
    - ILC and Project X management define requirements
- Discontinue the HIgh Intensity Neutrino Source (HINS) program as a stand-alone R&D program
  - Rescope the beam facility to support chopper and instrumentation development for Project X. Fund via Project X R&D
  - Retain low beta cavity development under the direction of the ILC/SRF Program Director
  - Eliminate HINS as a budget line item

Project X/ILC/SRF
Integrated Plan

- Establish clear deliverables for the srf program over the period FY2010-15:
  - Six 1300 MHz cryomodules, culminating in a CW Project X prototype
    - High power rf tests.
    - ILC rf unit test, with beam, at NML based on three 1300 MHz ILC cryomodules
  - One 650 MHz cryomodule for Project X. High power rf test.
  - One 325 MHz cryomodule for Project X. High power rf test.
  - Complete Project X test facility at Meson Lab

Integrated SRF Plan

ILC + PX

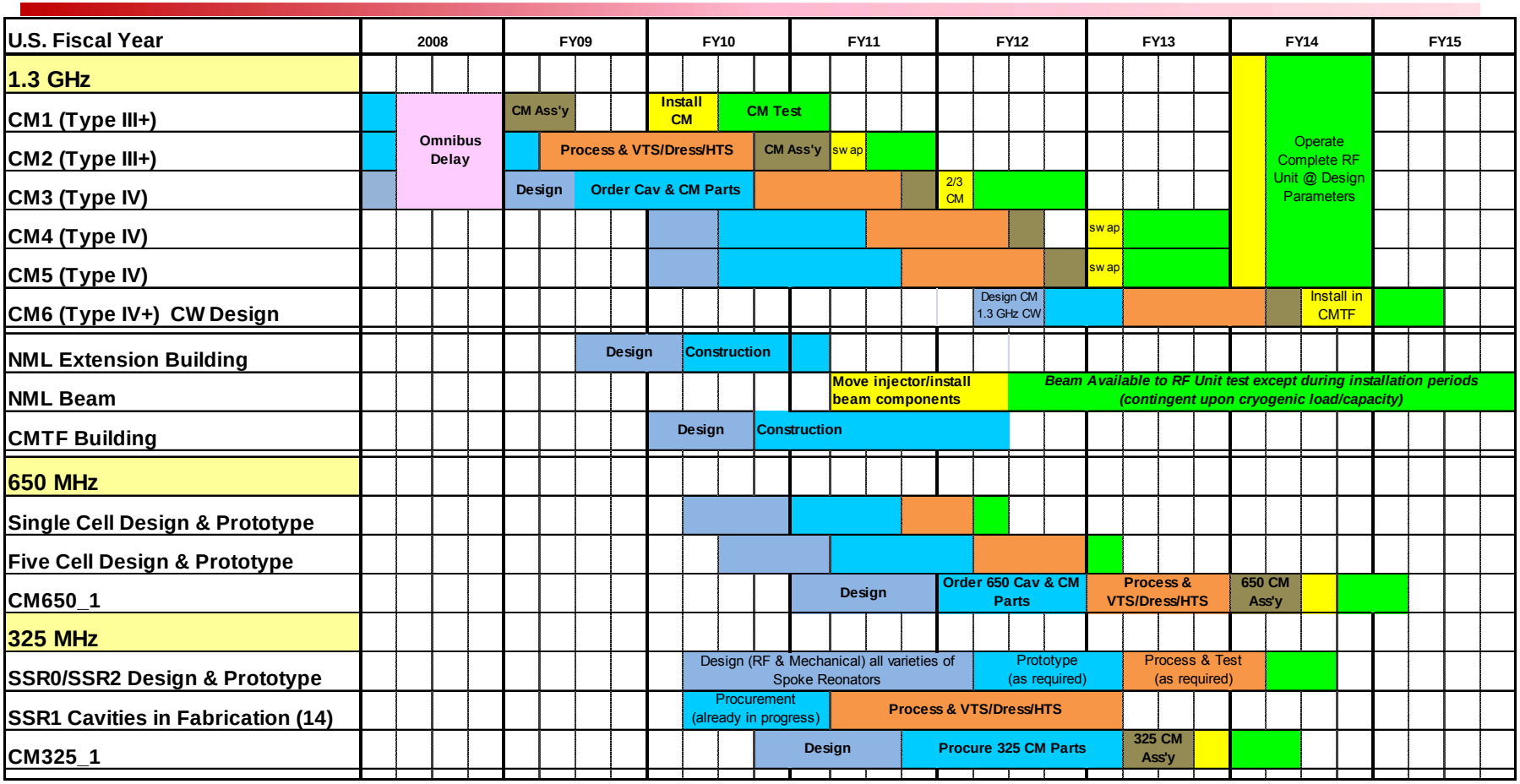

Organization

- Project X is organized as a national project with international participation
  - Fermilab as the lead laboratory
- Fermilab PX Organization
  - Associate Director for Accelerators: Stuart Henderson
  - Project Manager: Steve Holmes
  - Project Scientist: Sergei Nagaitsev
  - Project Engineer: Jim Kerby
  - SRF Coordinator: Bob Kephart
  - International Coordinator: Shekhar Mishra
  - Subsystem Managers: Numerous (All identified)
- Collaboration Council
  - Inter-institutional communication to facilitate execution of the RD&D phase, and prepare for a construction pahse
  - Institutional representation from each of the MOU signatories

Collaboration Status

- Collaboration MOU for R&D phase:

ANL	ORNL/SNS
BNL	MSU
Cornell	TJNAF
Fermilab	SLAC
LBNL	ILC/ART

- MOU/Addendum on development of high intensity proton sources in place between Fermilab and Indian institutes:

BARC/Mumbai

IUAC/Delhi

RRCAT/Indore

VECC/Kolkota

Near Term Strategy
(~Next 6 months)

- Complete IC-2v2 documentation:
  - ICD-2v2
  - Accompanying cost estimate
  - Updated R&D plan
- Develop plan on critical technical issues
  - Baseline concept for the chopper
  - Concepts for marrying a 3-8 GeV pulsed linac to the CW front end
  - Injection into the first circular accelerator
  - Establishment of beam requirements for initial experiments
- Transition to the CW R&D program
- Conduct DOE briefing
  - Physics and accelerator concept

⇒**All cost/configuration info available**

- Push for CD-0

Longer Term Strategy

- Execute R&D plan oriented toward IC-2
  - Emphasis on srf development at all relevant frequencies
  - Consolidated Project X and SRF infrrastructure efforts in common organization with rationalized funding sources
  - Engagement of collaborators
- Identify/engage stakeholders outside HEP
- Establish possible upgrade path for a muon facility front end
- DOE has advised us that the earliest possible dates are:
  - CD-0: FY2011
  - CD-3 (construction start): FY2015
- Prepare for a 5-year construction period

Working Timeline

- FY2010
  - Complete Initial Configuration Document and preliminary cost estimate corresponding to Initial Configuration-2
  - Revise RD&D plan and initiate work
- FY2011
  - CD-0
  - Initiate work on Conceptual Design Report
  - Initiate permitting documentation
- FY2012
  - CD-1
- FY2013
  - CD-2/3a
- FY2014
  - CD-3: Initiate Construction
- ~FY2015~2019
  - Construct

Collaboration Meeting: Goals

- Discuss Current Project X Configuration
  - Review of ICD-2
  - Discussion and input from collaboration on specified technical issues
    - See slide 15
- [Establish RD&D Plan for FY11]
  - Review the RD&D plan corresponding to IC-2
  - Discuss/establish work plan for FY11-12
    - Goals, milestones, assignments
    - Strawman budgets for FY11 will be provided as starting point
    - FY11 budgets will be established following the collaboration meeting
  - Understand integration with the ILC and SRF infrastructure programs.
- Collaboration Council Meeting
  - Review of Project X status and strategy
  - Review current institutional assignments
  - Discuss potential interactions with international and university collaborators
  - Discuss establishment of a Technical Advisory Committee
  - Establish next Collaboration Meeting dates and site

Collaboration Meeting:
Agenda

- Wednesday, September 8
  - Opening plenary session 08:30-10:30
    - Project X Introduction and Strategy Steve H.
    - Project X ICD-2 Overview Sergei N.
  - Coffee Break (1 West) 10:30-11:00
  - Working Groups session one 11:00-12:30
  - Lunch (self-serve) 12:30-13:30
  - Working Groups session two 13:30-15:30
  - Coffee Break (WH2, W&C) 15:30-16:00
  - Working Groups session three 16:00-17:30
  - Collaboration Council meeting 16:00-17:30
  - Adjourn 17:30

Collaboration Meeting:
Agenda

- Thursday, September 9
  - Working Group Reports 08:30-10:00
    - Linac Integration
    - Cavities and Cryomodules
    - Linac RF
    - Cryogenics
  - Coffee Break 10:00-10:30
  - Working Group Reports 10:30-12:00
    - Linac Front End
    - Main Injector/Recycler
    - Instrumentation and Controls
    - Pulsed Linac and Injection
  - Adjourn 12:00

Collaboration Meeting:
Working Groups

- Charge to the working groups:
  - Review and confirm understanding of ICD-2v2
  - Discuss and identify any potential issues/modifications to ICD-2v2
    - With particular emphasis on technical issues on slide 15
  - [Establish goals and work plan for FY2011-12 (elements and sequencing);]
  - [Provisional distribution of responsibility, and funding, for FY2011-12]
  - Identify any issues related to the above that need resolution

- Provisional FY2011 budget distribution ($K, direct costs only):

	M&S	SWF	Collabs	Total
Available*	$2830	$5639	$1350	$9834

*Notes:
  - Includes beam test facility at MDB (formerly known as HINS)
  - Does not include FY2010 carryover estimated at: $500-750K
  - Intend to establish FY2011 budget following this meeting

Collaboration Meeting:
Working Groups

• RF Systems	R. Pasquinelli/B. Chase
• Cavities & CMs	M. Champion/B. Rimmer
• Main Injector/Recycler	I. Kourbanis/R. Ryne
• Instrumentation/Controls	M. Wendt/C. Briegel/W. Blokland
• Cryogenics	A. Klebaner/B. Petersen
• Linac Integration	S. Yakovlev/J. Kerby/J. Galambos
• Pulsed Linac/Injection	S. Nagaitsev/D. Johnson/D. Raparia
• Linac Front End	R. Webber/D. Li

Agenda: http://indico.fnal.gov/conferenceDisplay.py?confId=3542

Summary

- Project X is central to Fermilab's strategy for future development of the accelerator complex:
  - Energy Frontier: Aligned with ILC technology development; Fermilab as potential site for ILC or a Muon Collider
  - Intensity Frontier: World leading program in neutrinos and rare processes; Fermilab as potential Neutrino Factory site
- Initial Configuration-2 established as preferred concept
  - 3 GeV identified as an effective energy for the rare processes program
  - 3 GeV CW linac identified as providing flexible support to this program
  - Simultaneous operations of multiple 3 GeV experiments with different bunch configurations.
  - Prefer a pulsed linac for 3-8 GeV acceleration; we are closing in on a self-consistent concept
- Project X could be constructed over the period ~2015 - 2019
- Collaboration Meeting Goals:
  - Look at ICD-2, in particular discuss areas of technical uncertainty
  - Formulate the plan for next year

Working Group Room Assignments (session 1)

RF Systems	1-North
Cavities & CMs	Hermitage (ICB2)
Main Injector/Recycler	Req Room (WH4NW)
Instrumentation/ Controls	1-West Curia II (WH2SW)
Cryogenics	Comitium (WH2SE)
Linac Integration	1-West
Pulsed Linac/Injectiontegration	1-West
Linac Front End	1-West