Plans for a New Front-End for the existing FNAL Linac

C.Y. Tan/W. Pellico
8 Sep 2010
Project X Collaboration Meeting 2010

Fermilab,
P.O. Box 500
Batavia, IL 60510

cytan@fnal.gov

People *(Additional Help – Needed/Requested)*

- AD people:
  - W. Pellico (head of proton source), C.Y. Tan, J. Lackey, D. Bollinger, K. Duel, R. Riley, V. Scarpine.
- TD people:
  - G. Velev, V. Kashikhin, A. Makarov
- Thanks to BNL pre-injector group
  - J. Alessi, D. Raparia, M. Okamura, V. Lodestro.

Present Injector – Vintage 1968 Hardware

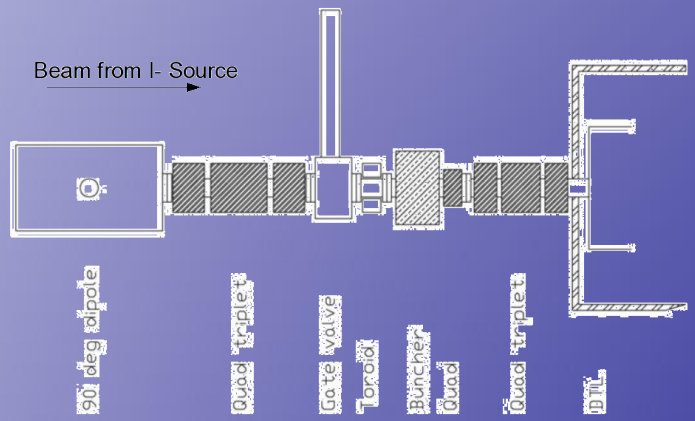

- Magnetron Source
  - 35 keV ribbon beam
  - Current about 50-60mA
- Cockcroft Waltons
  - 750keV
  - Current about 45 - 55 mA
- MEBT section
  - Quads and buncher before Tank 1
  - Dipole to accommodate another H- source + Cockcroft Walton

Reasons for Upgrade

- The components are getting harder to maintain
  - Critical personnel have retired.
  - Components getting harder to find and replace
    - Critical failure of I- column in early 2010 which required a rebuild.
- As system ages, more time and attention required to maintain reliability of system.
- Going to RFQ system should increase beam quality and system reliability.
  - Very good results from BNL when they switched from Cockcroft-Walton to RFQ system. Done in 1989. (21 years late to the party)

Objectives

- This is not an R&D project
- Copy as much as possible from an existing injector
  - BNL injector is used as basis of design.
- Use as much as possible existing infrastructure, technology and expertise.
  - Convert slit magnetron source to round magnetron source
    - BNL style source. Very good reliability and performance > 90mA at 500 us, more than 6 months before any change required.
    - 750keV RFQ 60mA 200MHz (not technology limited)
- Better performance
  - At least 10-15% improvement in efficiency to Booster.
- Support future operations – Nova, Mu2E, MicroBooNE, G-2, RunIII

Overall Design

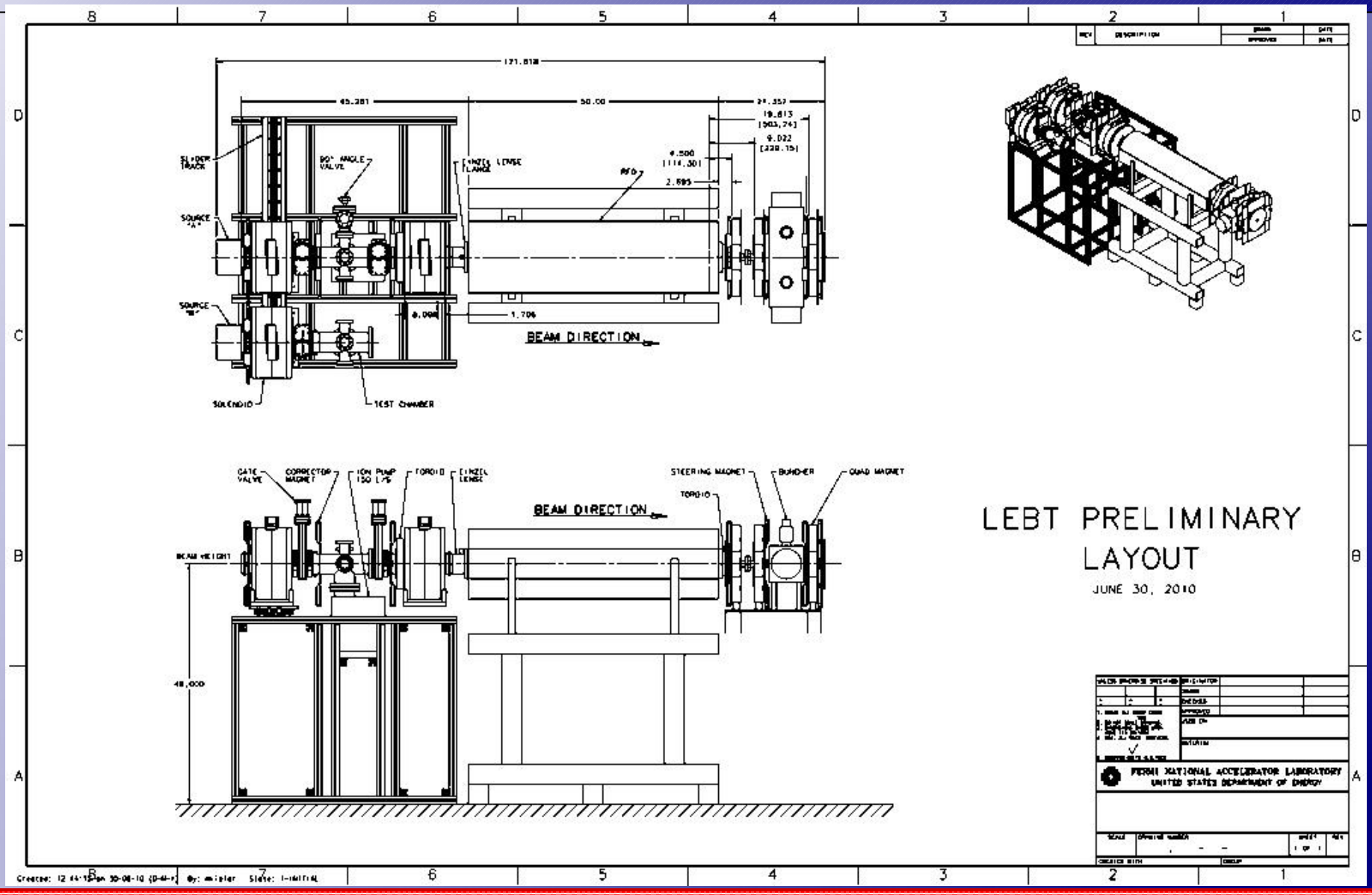

The H- Source

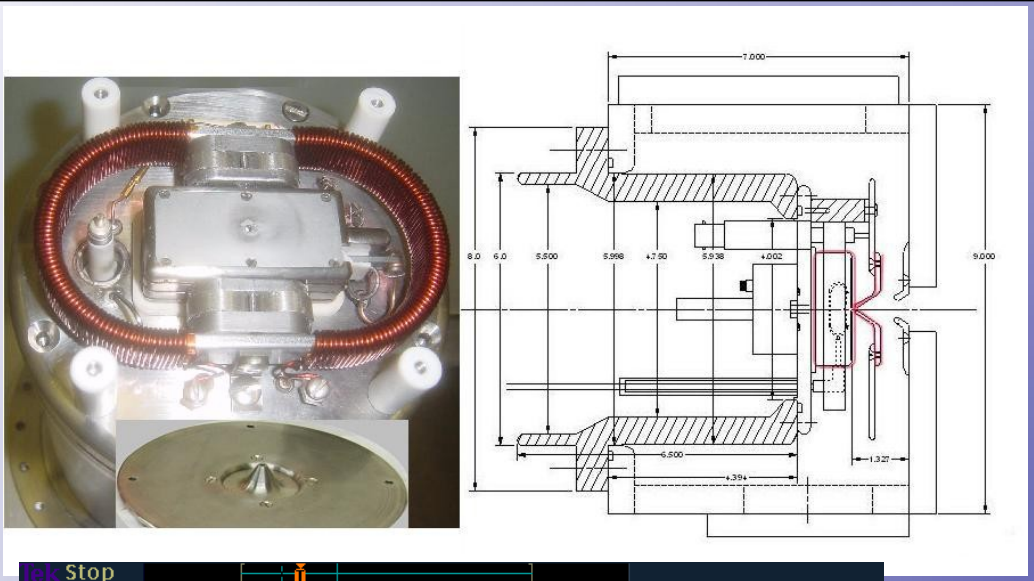

In the process of bringing up the H- source

- 60mA at 26kV extraction voltage
- Should get 90mA at 35kV extraction.

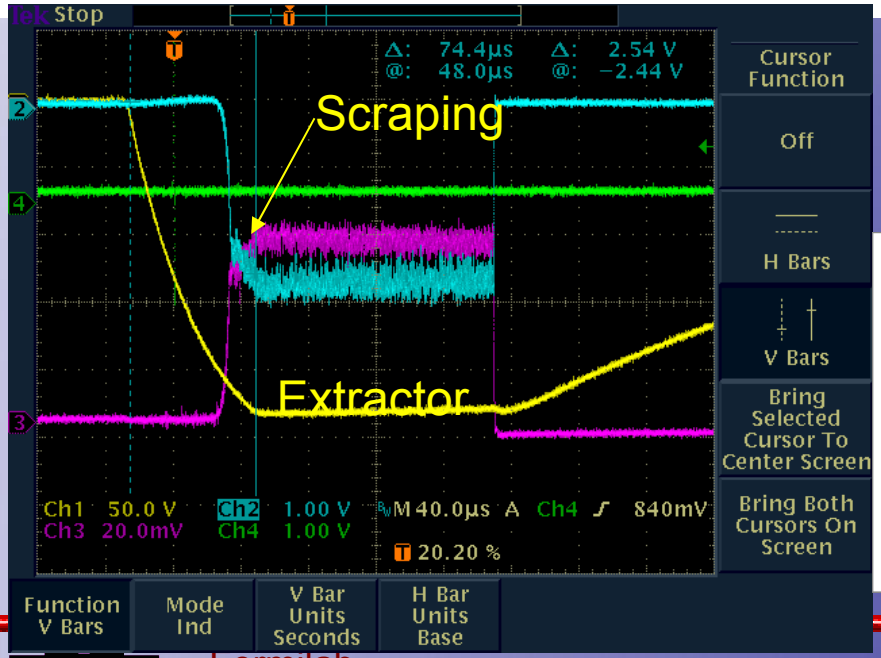

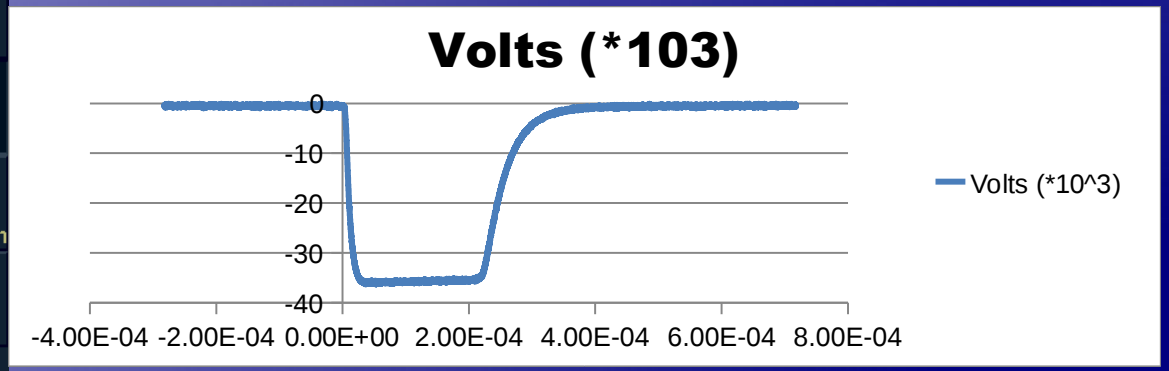

LEBT

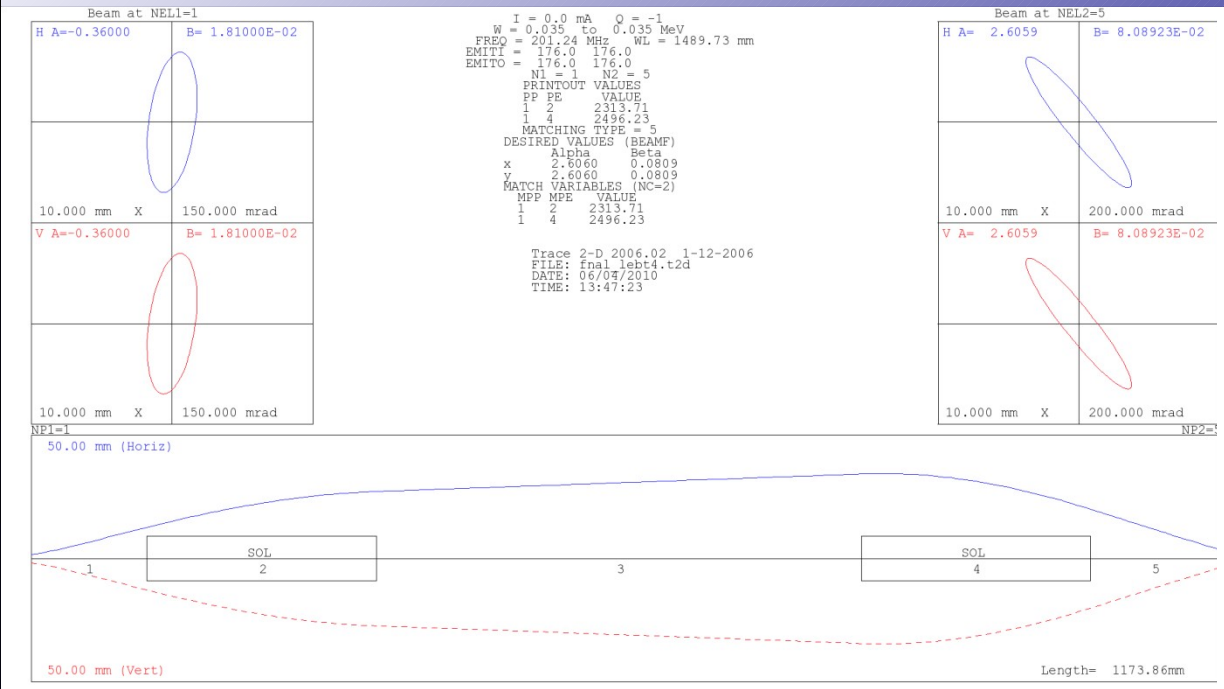

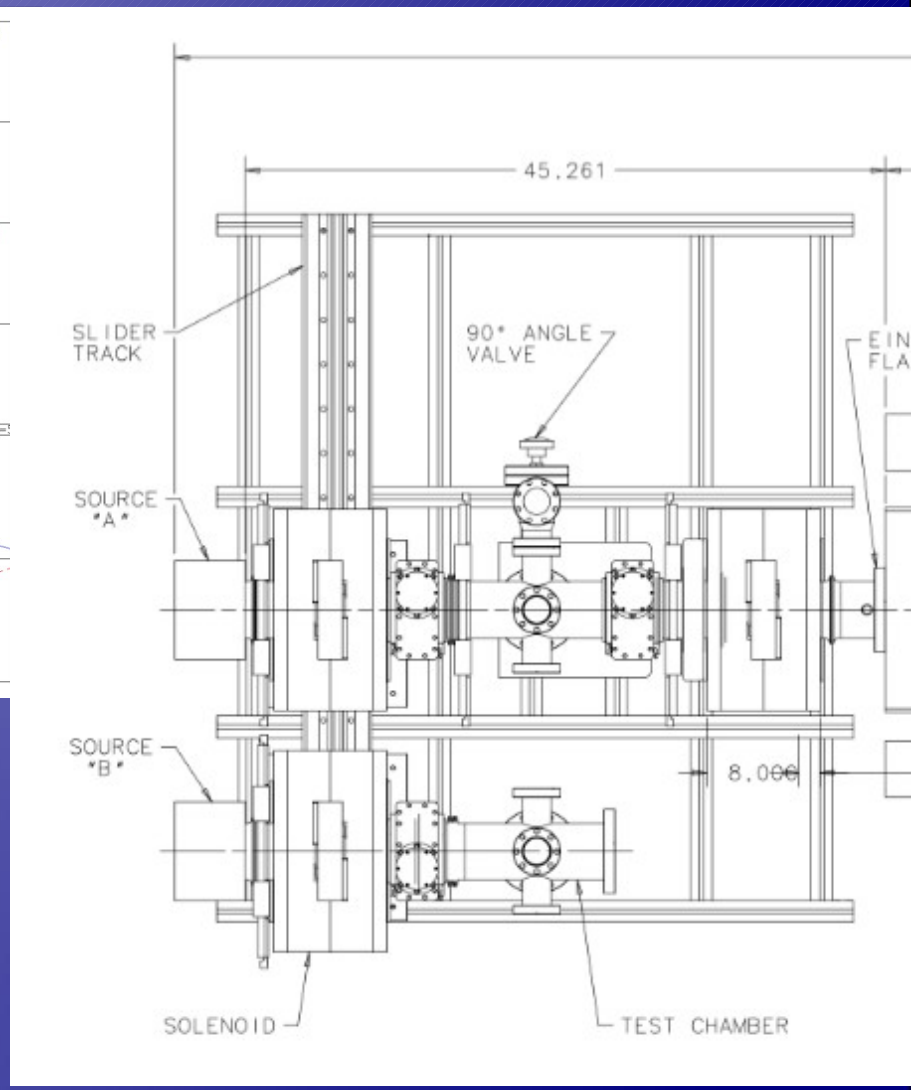

- LEBT < 1.2 m long
- 2 sources for reliability.
- Will probably use Xe gas neutralization of H-
- Solenoids are being built right now. Delivery expected by the end of the year.

Chopper

Suggested by D. Raparia (BNL)

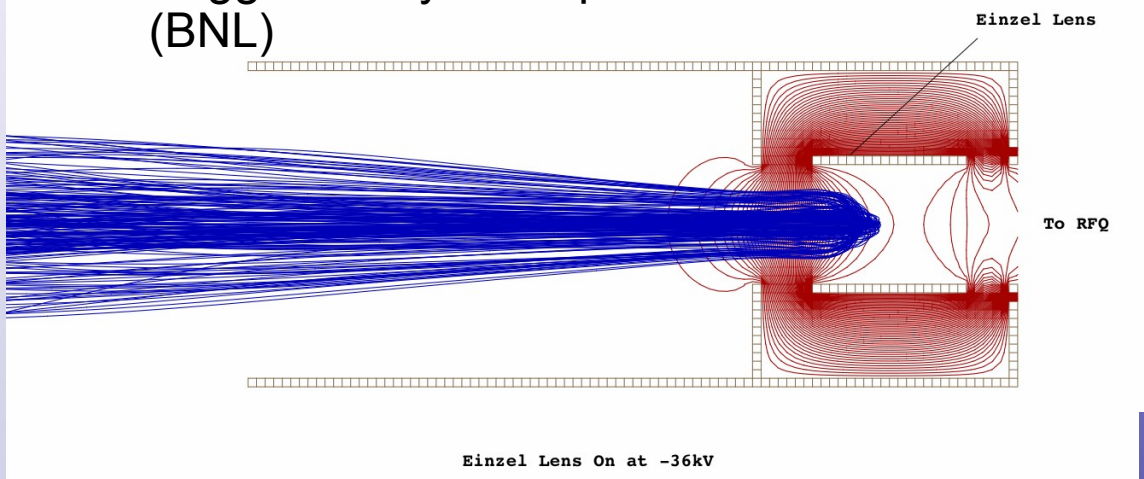

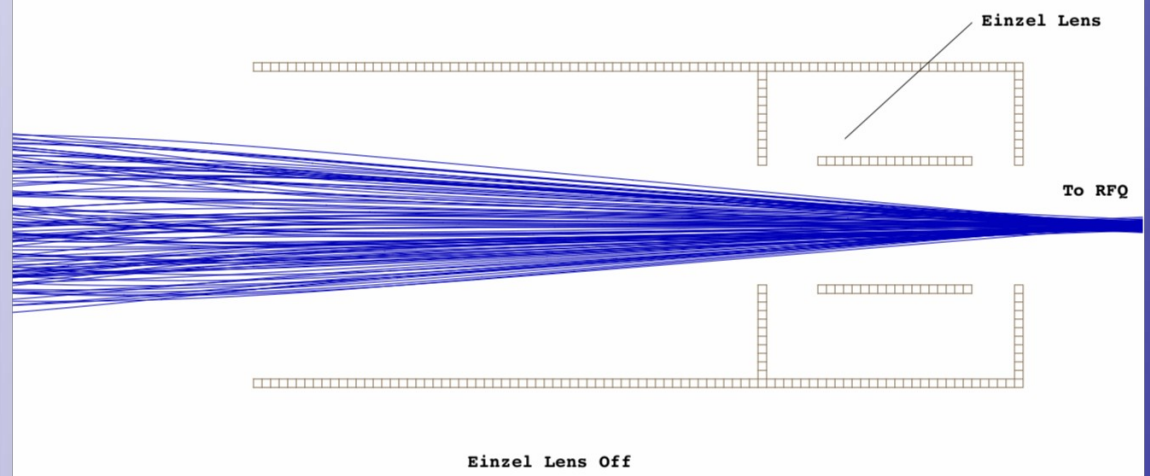

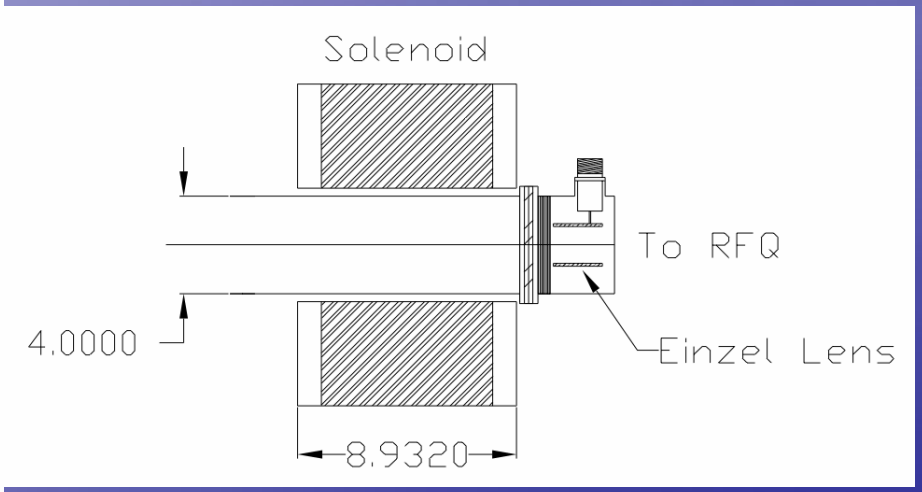

Preliminary experiments have shown that Einzel lens will not spark at 37kV with or without H-

Reason for chopper

- Want rise/fall time of H- < 1us.
- Want control of length of pulse.

RFQ

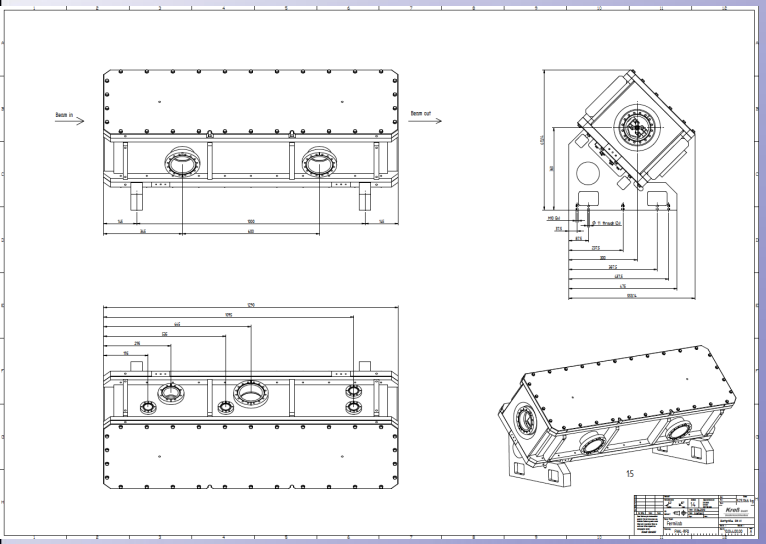

- 750keV RFQ.
- 60mA beam current
- 1.3m long.
- Rod design.
- Alwin Schempp designer
- Expected delivery, early 2011

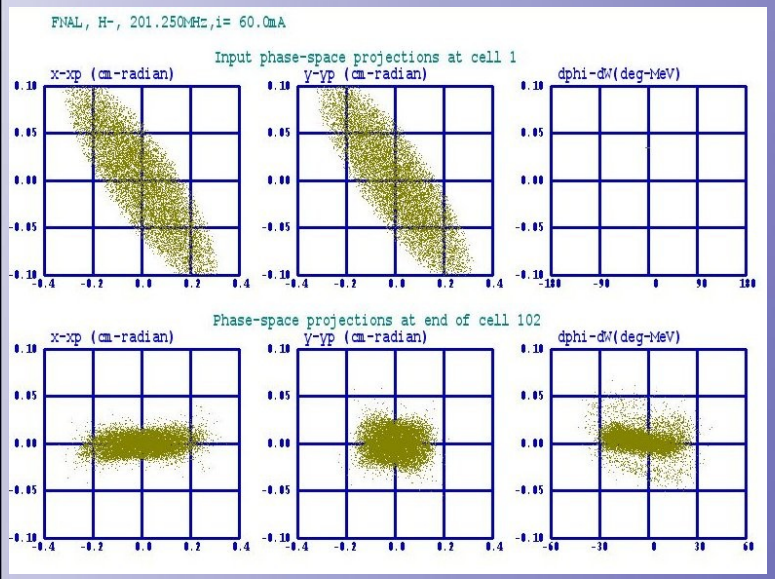

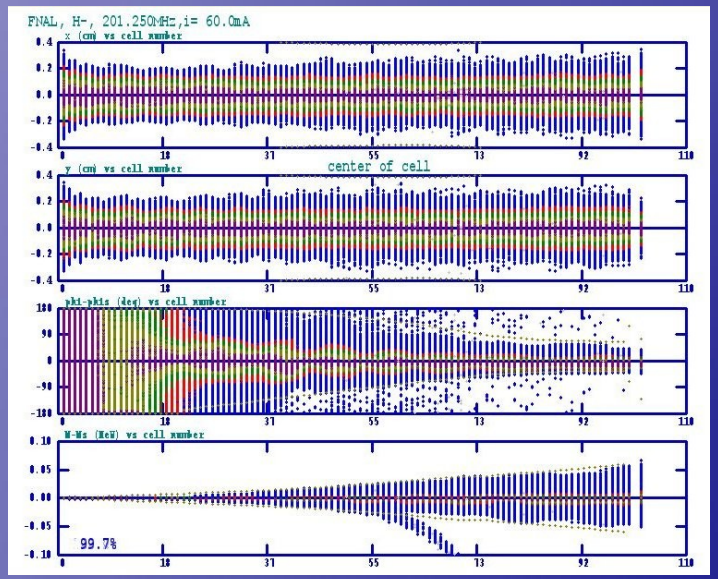

RFQ

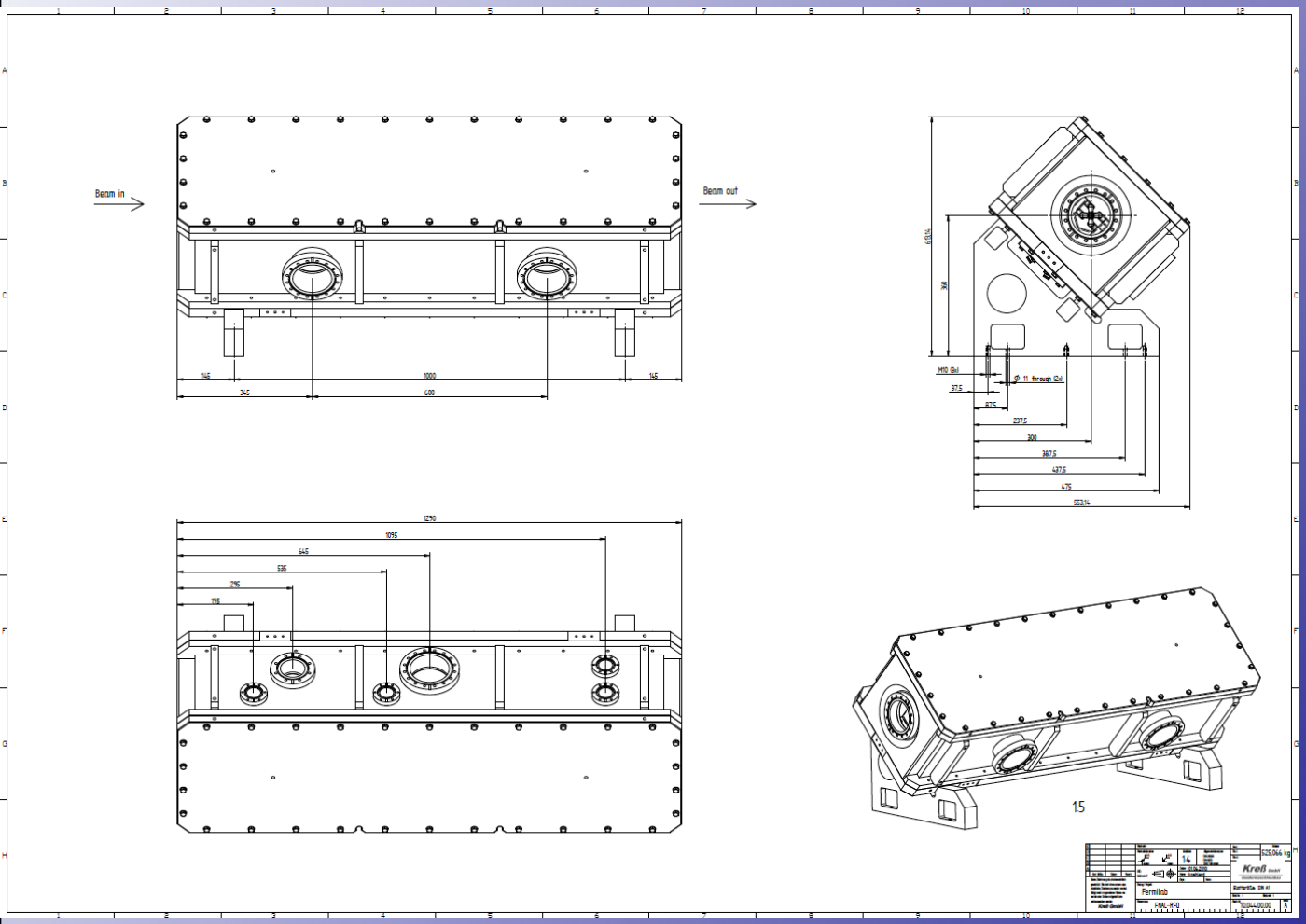

- 750keV RFQ.
- 60mA beam current
- 1.3m long.
- Rod design.
- Alwin Schempp designer
- Expected delivery, early 2011

MEBT

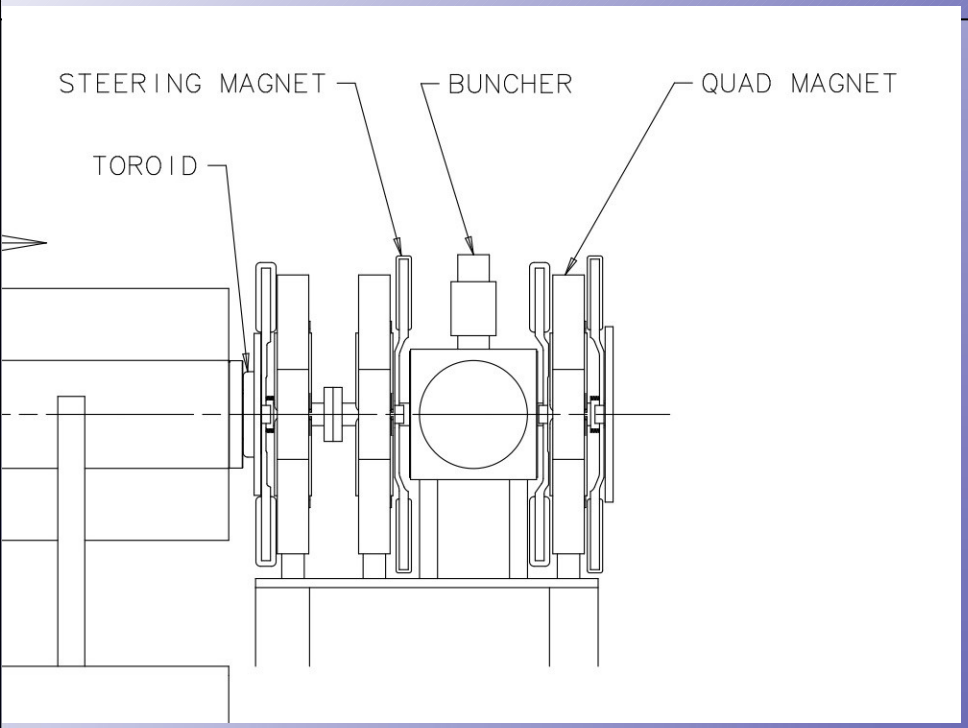

Near identical copy of BNL MEBT

- Only 73.25 cm long
- Buncher will be bought from Time.com (Japan)
- Quads (45mm) being designed in TD with correction dipoles

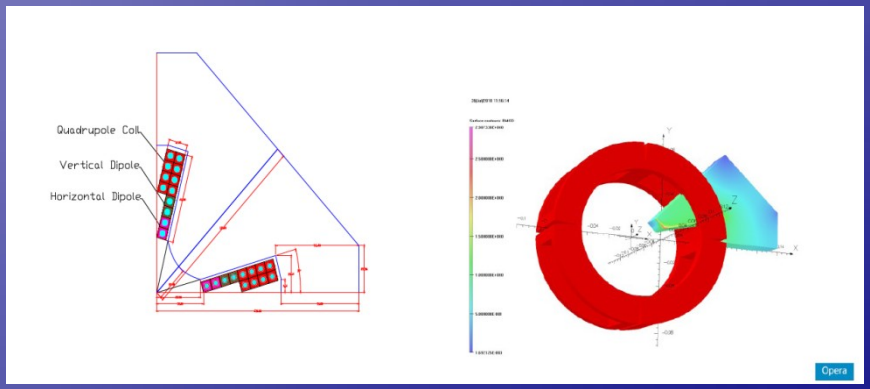

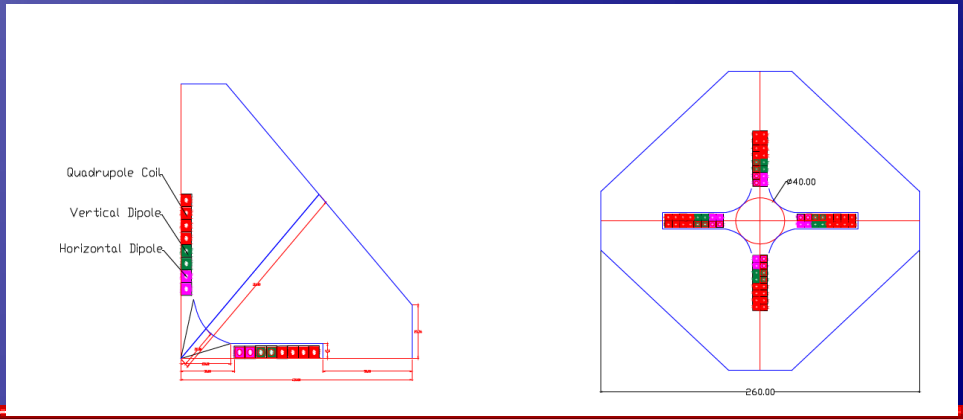

Buncher

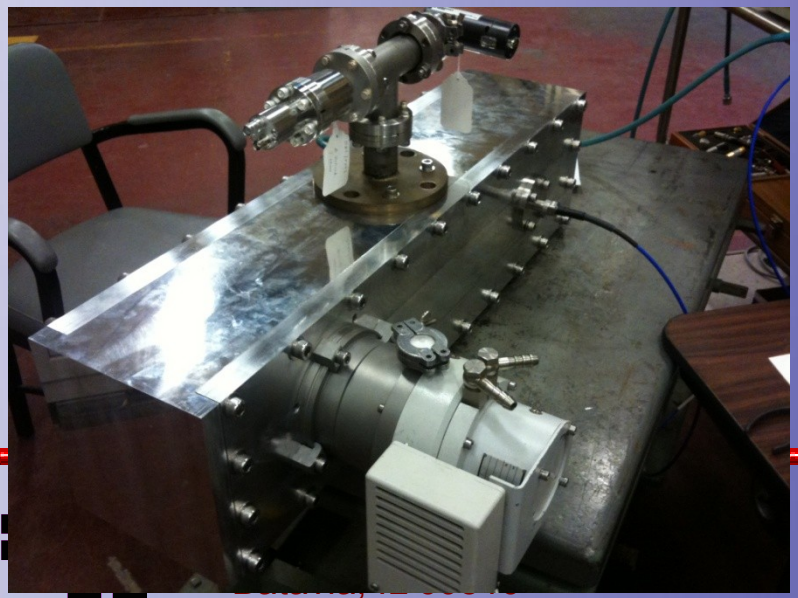

Pictures from BNL. Thanks to M. Okamura.

Parmila Simulations

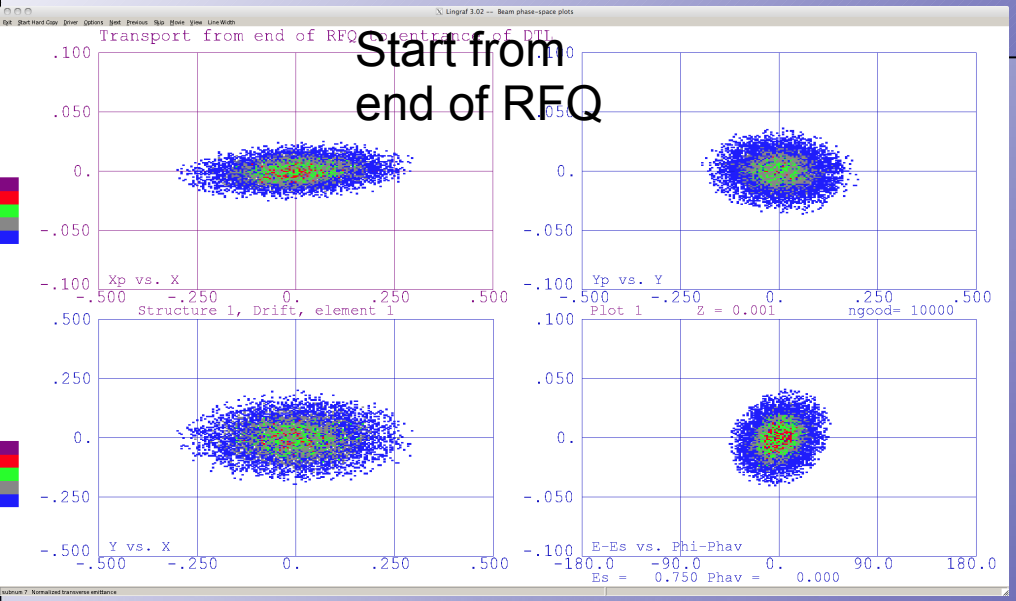

Using 60mA beam from end of RFQ to end of Tank 1 we get 80% capture (without optimizing the quad strengths in Tank 1)

End of Tank 1

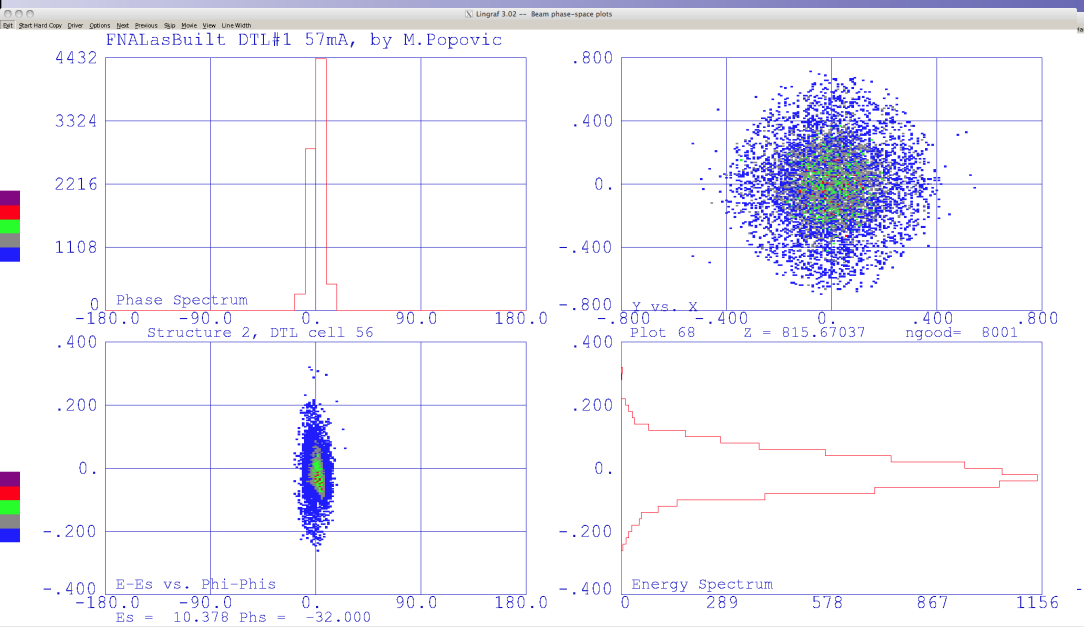

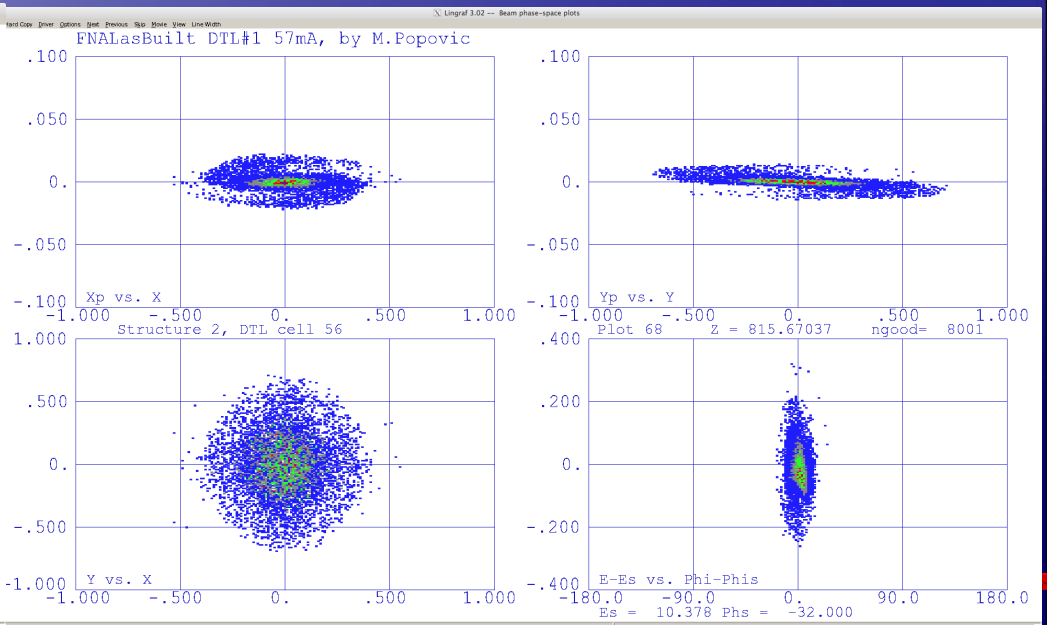

Conclusion

- Goal is to complete testing of injector before the shutdown of 2011.
  - Installation will probably take 3 months
- Lots of things to do before then
  - Complete commissioning of the H- source
  - Test Einzel lens as chopper.
  - Check and condition buncher.
  - Check and condition RFQ
  - Have test stand ready for beam test
  - Build and complete solenoids.
  - Build and complete quadrupoles.