REV	DESCRIPTION	DRAWN	DATE
		APPROVED	DATE

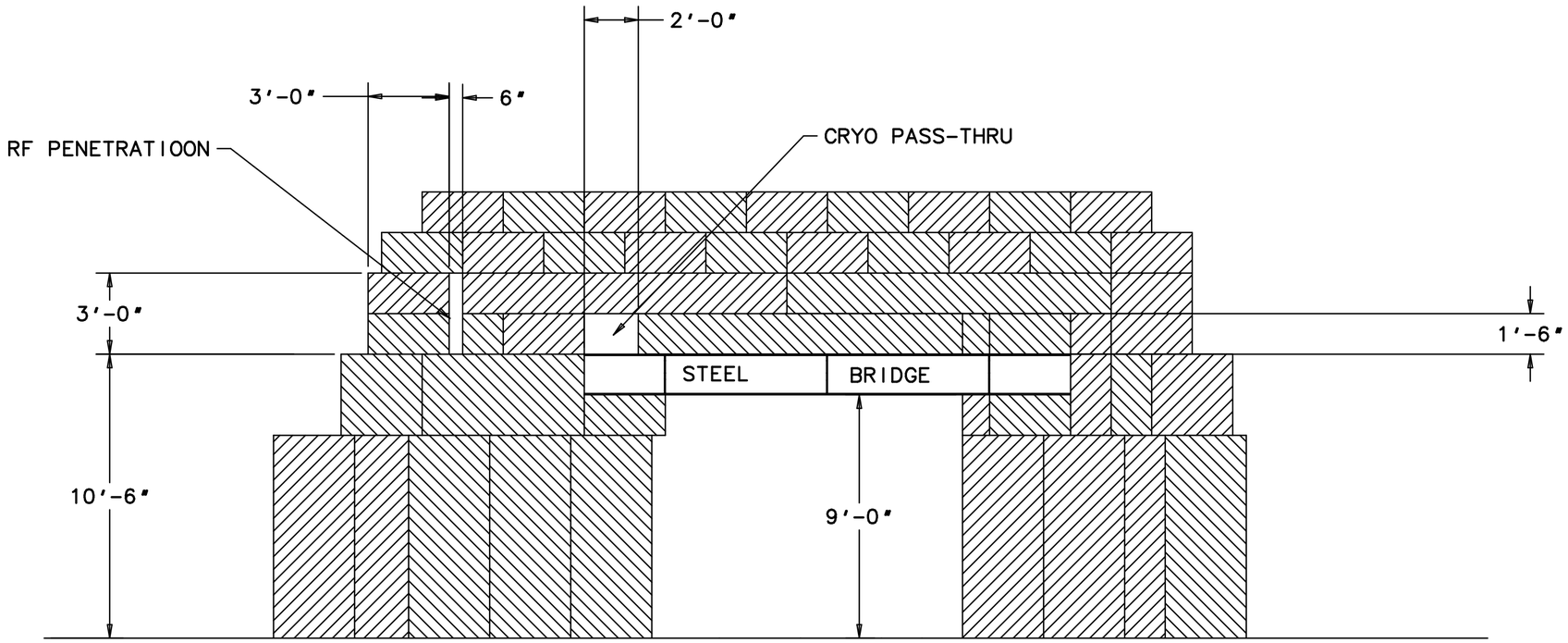

SECTION E-E

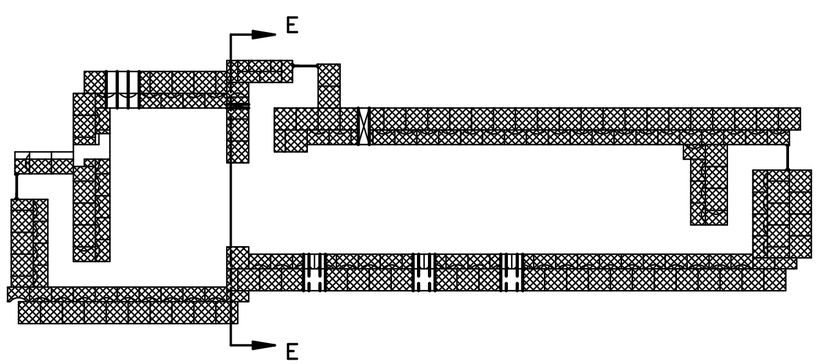

FOOTPRINT

UNLESS OTHERWISE SPECIFIED			ORIGINATOR	B.WEBBER	23-AUG-2010
			DRAWN	B.POPPER	23-AUG-2010
±	±	±	CHECKED		
1. BREAK ALL SHARP EDGES MAX.			APPROVED		
2. DO NOT SCALE DRAWING. 3. DIMENSIONS BASED UPON			USED ON		
4. MAX. ALL MACH. SURFACES √			MATERIAL		
5. DRAWING UNITS:					

FERMI NATIONAL ACCELERATOR LABORATORY
UNITED STATES DEPARTMENT OF ENERGY

HINS RADIATION SHIELDING ASSESSMENT PENETRATIONS SECTION E-E

SCALE	DRAWING NUMBER	SHEET	REV
NONE	5520.000-MC-481767	6 OF 8	

CREATED WITH : Ideas12NXSeries | GROUP: ACCELERATOR MECH. SUPPT.