High Intensity Neutrino Source Report

DOE Site Visit

B&R Code KA15-02-011
General Accelerator Development

Bob Webber

August 23, 2010

Project X FY10 – HINS Accomplishments

- Began construction of HINS beam line radiation shielding enclosure
- Installed and commissioned the HINS RFQ once again following RF seal repair at the vendor's facility
- Achieved 2.5 MeV beam from RFQ; then removed RFQ to repair water-to-vacuum leaks
- Completed installation of cryogenics delivery system and cavity test cryostat for HINS 325 MHz cavity test facility
- Assembled first 325 MHz SSR1 cavity into helium jacket
- Successfully completed full-field test of first jacketed 325 MHz SSR1 cavity to 27 MV/m @4K
- Received delivery of the full complement of copper RT-CH cavities from industrial vendor
- Completed assembly of first superconducting solenoid magnet into its cryostat and completed initial magnetic testing of the assembly

Began Construction of Beam Line Shielding Enclosure

Repaired RFQ --- Re-installed and Re-commissioned

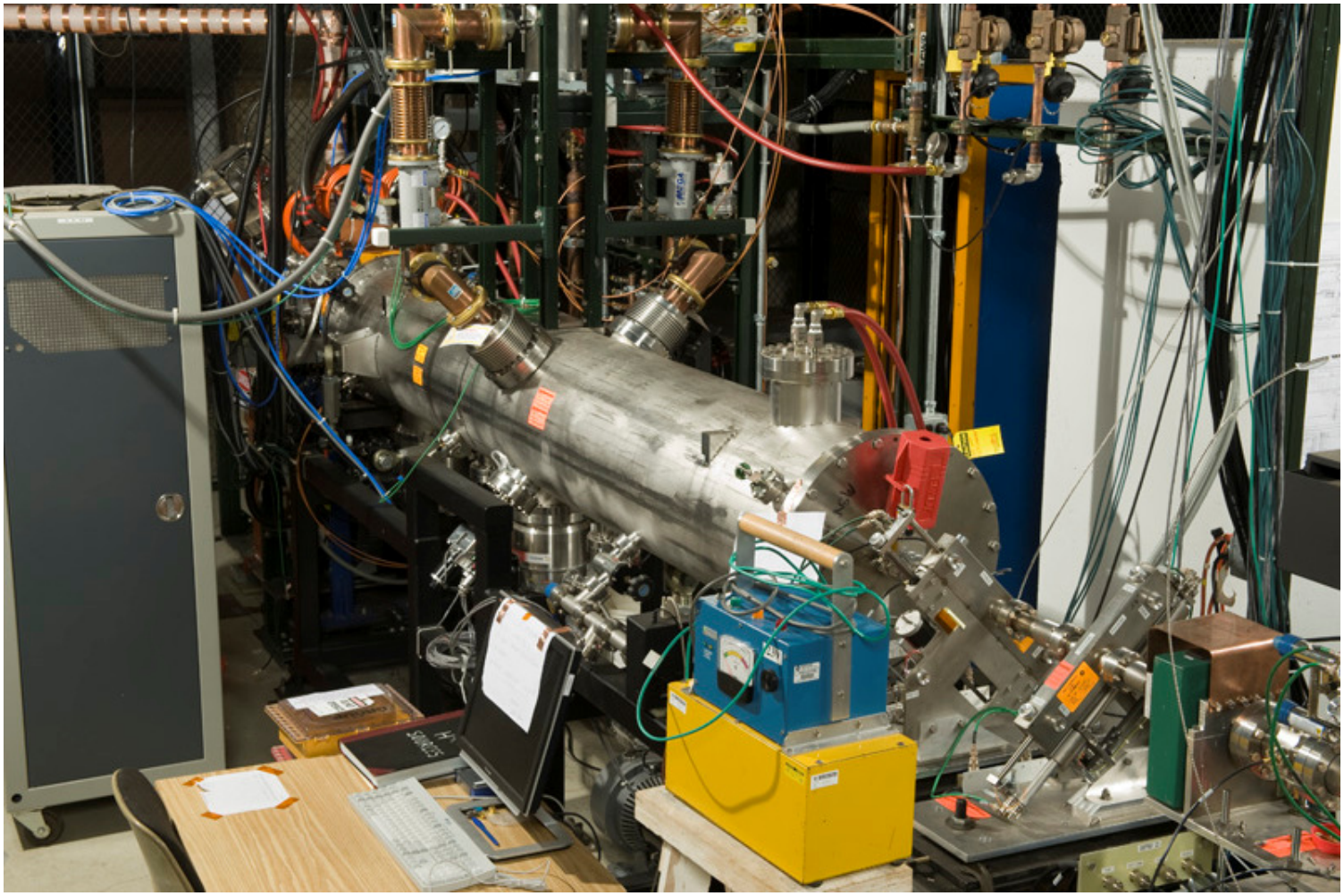

First 2.5 MeV Beam through HINS RFQ on January 13, 2010

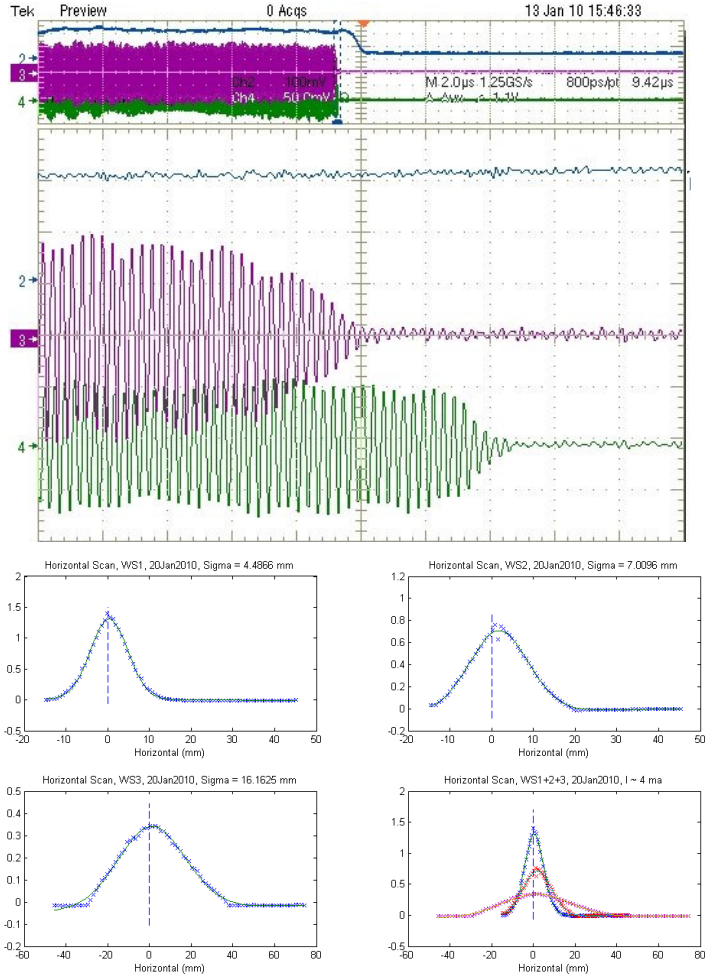

Signals from toroid and two BPM buttons, all downstream of the RFQ

Upper display: 2 µsec/div
Lower display: 20 nsec/div

Lower display shows 44nsec transit delay expected for 2.5 MeV beam between the BPM two buttons separated by 0.96 meters

Beam current is about 3 mA

Profile measurements of 2.5 MeV beam from HINS RFQ

325 MHz Cavity Test Facility --- Cryogenics Delivery System and Cryostat Installed

Assembled First SSR1 Cavity with Helium Jacket and Tuner

First SSR1 Jacketed Cavity Installed in Cavity Test Cryostat

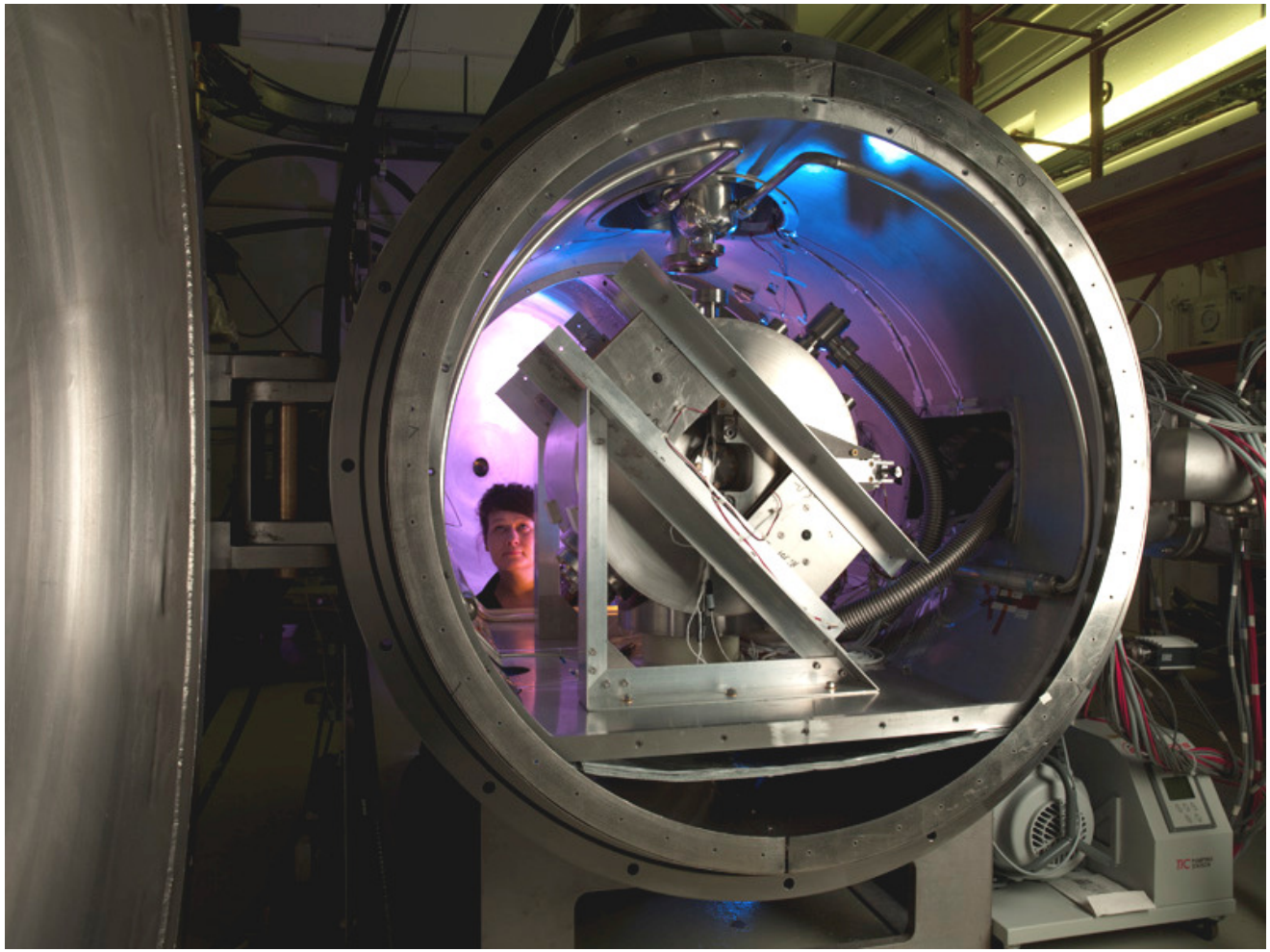

SSR1-01 Performance in HINS Cavity Test Facility

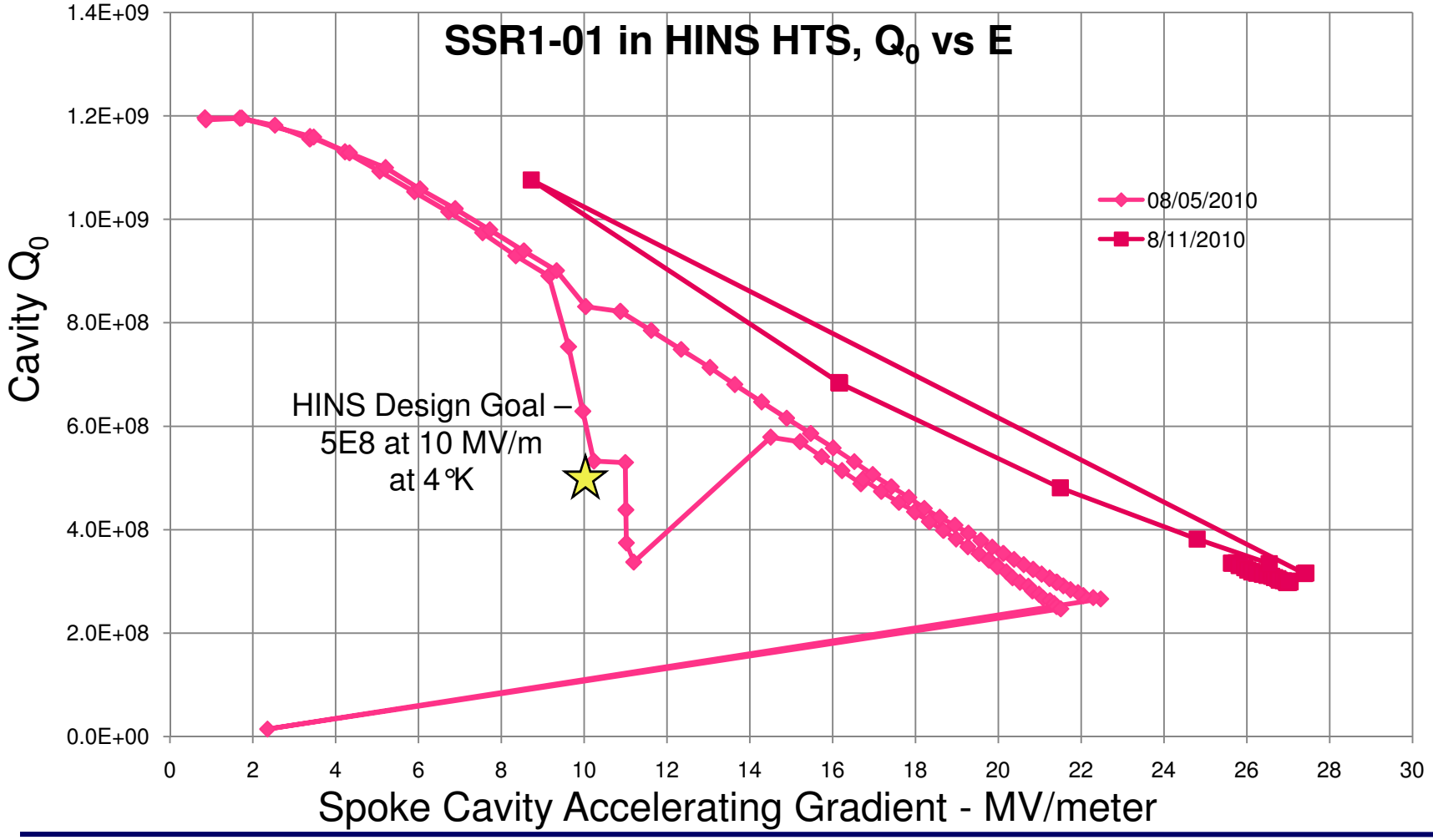

Accepted Final Delivery of Sixteen HINS RT-CH Cavities

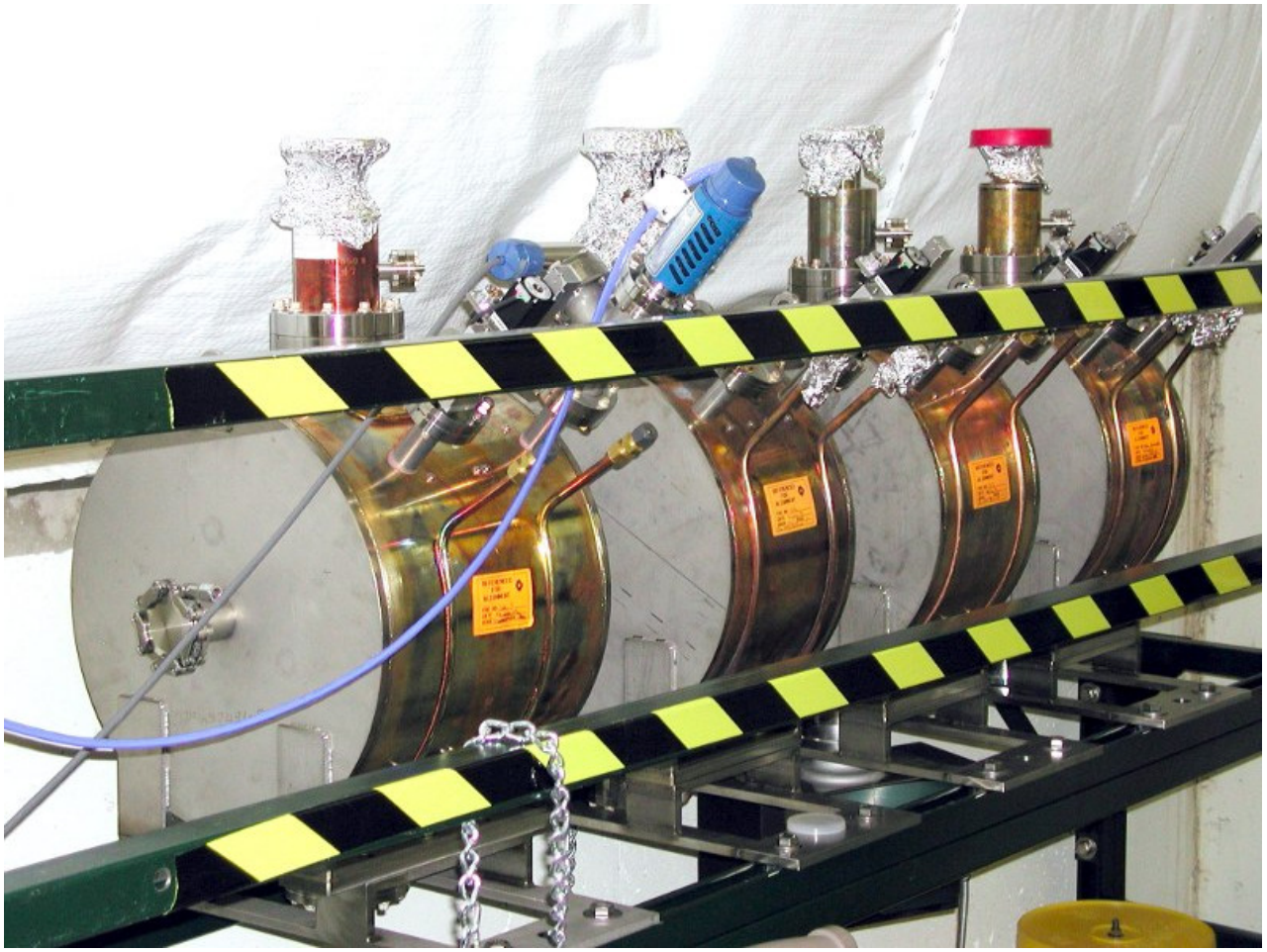

First HINS Solenoid Magnet Cryostat Assembly & Tests

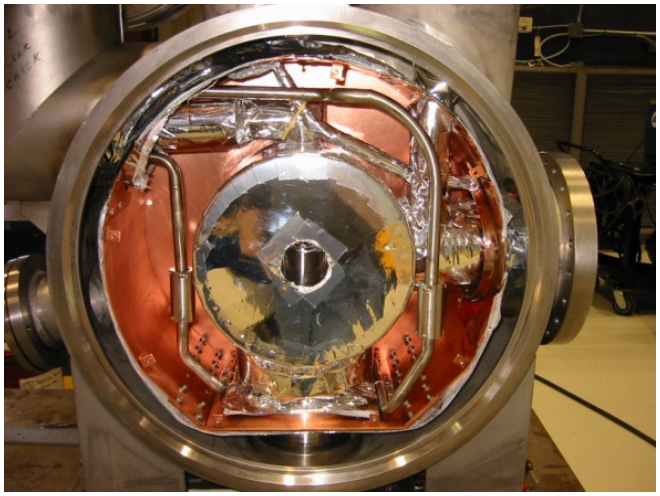

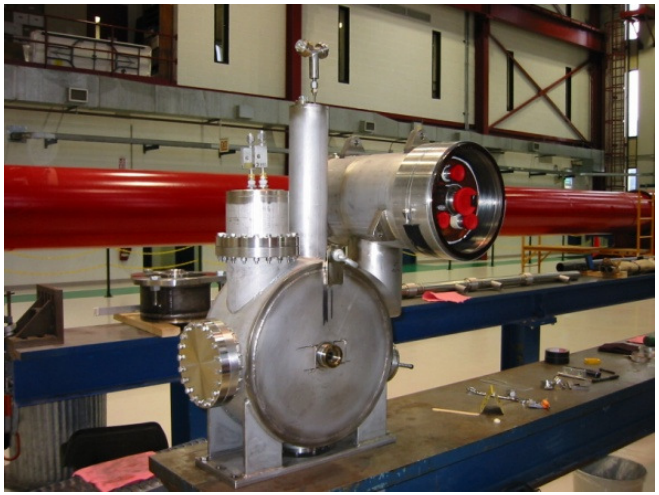

Additional FY10 HINS Accomplishments

- Produced near-final Safety Assessment and Radiation Shielding Assessment documents for the HINS beam facility
- Placed purchase order for spare 325 MHz RF klystron - $560,000
- Placed purchase order for ten 325 MHz SSR1 cavities from Roark/NioWave - $360,000
- Began serious assessment of how past HINS development work on pulsed linac systems is best leveraged to the advantage of a CW Project X linac
  - Studied 325 MHz Single Spoke cavity and helium vessel design modifications for CW operation at 2°K
  - Initiated design modifications required for sub-atmospheric, 2°K, operation of the 325 MHz cavity test facility
  - Worked to identify critical beam tests that might be supported

FY11 Transitions

- HINS Linac beam facility
  - Will be absorbed into and managed with pre-Project X activities
  - Funding for this will be moved from General Accelerator Development KA15-02-011 to the Future Accelerators R&D KA11-02-034
- HINS 325 MHz superconducting RF spoke cavity development
  - Will be absorbed into and managed in an integrated manner with the overall Fermilab superconducting RF cavity development effort
  - Will continue to be funded by KA15-02-011
- KA15-02-011 also funds 650 MHz elliptical cavity development

FY11 HINS Beam Facility Scope of Work – KA11-02-034

- Complete construction of HINS beam line radiation shielding enclosure in MDB
- Obtain final operational approvals for the HINS Linac
  - Submit and review the Radiation Shielding Assessment
  - Submit and review the Safety Assessment Document
- Re-establish 2.5 MeV beam from RFQ
- Quantify parameters of 2.5 MeV beam from RFQ
- Replace existing HINS proton ion source with an H^- ion source
- Configure the HINS beam line for the "Six-Cavity Test" to verify high power RF vector modulator performance with beam in preparation for Project X beam chopper tests
- Begin pursuit of the Project X beam chopper test
  - Finalize beam line design
  - Specify needed components
  - Begin initial component procurement as budget permits

325 and 650 MHz Programs - KA15-02-011

- In FY11 and beyond, SRF technology efforts across all frequencies will be integrated
  - Common planning, budgeting and staffing
  - Collective prioritization of activities
  - Shared design/analysis tools, engineering procedures, lessons learned…
- 650 MHz and, to a lesser extent, 325 MHz will build on successful 1.3 GHz SRF accomplishments
  - Use existing SRF infrastructure with modifications where required
  - Continue collaborations with other labs (national and international) that have been established as part of the ILC/SRF Programs
  - Utilize the same skilled workforce and established procedures
- 325 Spoke cavities require further development and cry for first beam test
- Elliptical cavities near 650 MHz are used for other programs
  - 704 MHz (CERN), 805 MHz (SNS)
  - Nevertheless, the 650 MHz is a new cavity frequency that must be developed in detail

FY11 - 325 MHz Cavity Program Scope of Work

- Reconfigure SSR1-0 (now in the 325 MHz Cavity Test Facility with high Q_{ext} drive antenna) with a beam line power coupler and perfom full high power pulsed testing
- Jacket second SSR1 and test in HINS 325 MHz Cavity Test Facility
- Finalize integrated design of 2°K, CW SSR cavity and tuner system
- Complete construction of:
  - Two SSR1 cavities now being built at IUAC (India)
  - Ten SSR1 cavities now being fabricated at Roark/NioWave
- Design and install modifications to the 325 MHz cavity test facility cryostat and cryogenics delivery systems to support sub-atmospheric, 2°K and CW operation
- Complete RF and mechanical design of Project X SSR0 cavity and possibly begin fabrication of the first article

FY11 - 325 MHz Cryomodule Program Scope of Work

- Design a short (~four cavity) prototype Project X spoke cavity cryomodule
  - Integrate SSR cavities, tuners, power couplers, solenoid magnets and beam instrumentation components
  - Ultimately destined for beam test in HINS Linac
- Continue prototype work on solenoid magnets for SSR cryomodule
- Finish assembly of three HINS individually-cryostated solenoid magnets
  - Complete magnetic testing
  - Investigate warm-to-cold alignment issues

Project X FY11 - 650 MHz Scope of Work

- Modify existing EP facility and VTS for 650 MHz cavities
- Fabricate required handling and assembly fixtures
- Process & test single-cell 650 MHz β = 0.9 cavities (ANL, FNAL, India)
  - Six single-cell β = 0.9 cavities are being ordered in FY10
- Extend the RF and mechanical design of 650 MHz cavities to five-cell structures
- Continue support for work at collaborating institutions
  - JLab: Single-cell β = 0.6 design, prototype, process & test, CM study
  - ANL: Process β = 0.9 cavities, design study (elliptical vs. TSR)
  - India: single-cell β = 0.9 design and prototype, modified Type 4 CM design
- Depending on financial status and technical progress, order first prototype of 5-cell 650 MHz cavity
- Design radiation shielding enclosure for 650 MHz cavity test facility in MDB
- Specify and procure cryogenic delivery system components for 650 MHz cavity test facility in MDB

Summary

- FY10
  - A year of major accomplishments for the HINS program
  - A year of planning and preparing for upcoming organizational and programmatic transitions
- FY11 will see management and organization of the historic HINS program completely integrated into the SRF and Project X programs
- FY11 will see program goals re-defined in direct support Project X and SRF objectives
- A large scope of work is identified for FY11
  - Within KA15-02-011 for 325 MHz and 650 MHz superconducting cavity and cryomodule development activities
  - Within KA11-02-034 for the HINS Linac facility in support of Project X

Back-up slides

3 GeV CW Linac

Design based on 3 families of 325 MHz Single Spoke resonators, two families of 650 MHz elliptical cavities, then 1300 MHz ILC cavities

Ion source, RFQ

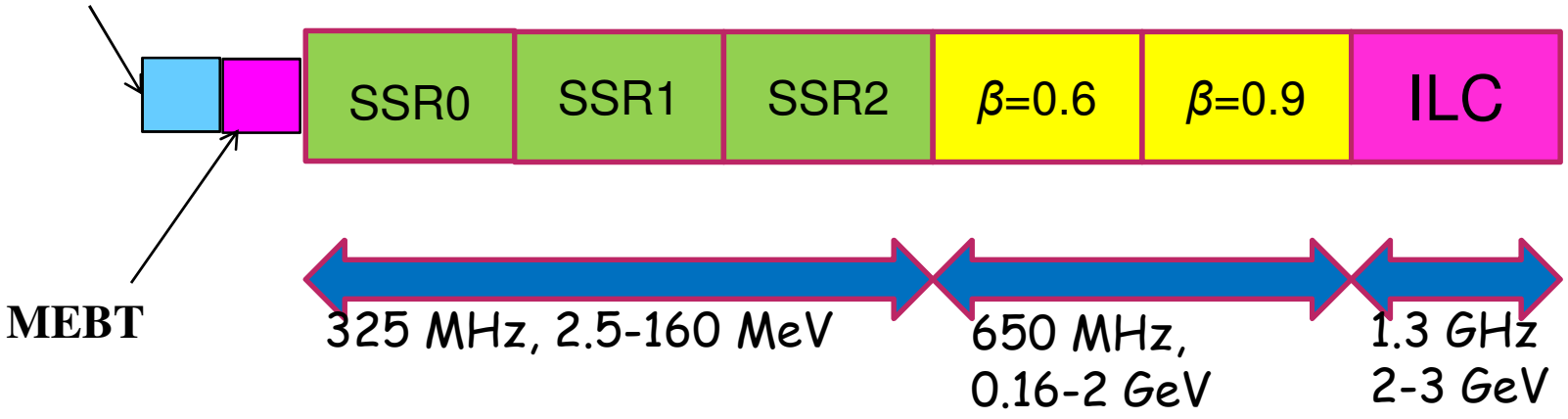

Summary of 3 GeV CW linac cavities

Section	Energy range MeV	β	Number of cavities	Type of cavities	Maximal power per cavity*, kW
SSR0 (β_G=0.12)	2.5-10	0.073-0.146	26	Single spoke cavity.	0.5
SSR1 (β_G=0.22)	10-32	0.146-0.261	18	Single spoke cavity.	1.5
SSR2 (β_G=0.4)	32-160	0.261-0.52	44	Single spoke cavity.	3.2
650 MHz (β_G=0.61)	160 - 500	0.52-0.758	42	Elliptic cavity	11.5
650 MHz (β_G=0.9)	50 - 2000	0.758-0.95	96	Elliptic cavity	18.5
1300 MHz (β_G=1)	2000-3000	0.95- 0.97	64	Elliptic cavity	16

*Without overhead

Summary of Cavity Parameters for PX

cavity type	Freq. MHz	L_{eff} mm	E_{acc} MV/m	E_{max} MV/m	B_{max} [mT]	R/Q Ω	G Ω	$Q_{0,2K}$ $\times 10^9$	P_{2K} [W]
LB650, 5-cell, β=0.61	650	705	16.6	37.5	70	378	191	15	24.1
HB650, 5-cell, β=0.9	650	1038	18.6	37.3	70	638	255	20	29.2
ILC, 9-cell, β=1	1300	1038	16.9	34	72	1036	270	15.0	19.8

SSR0 cavity design

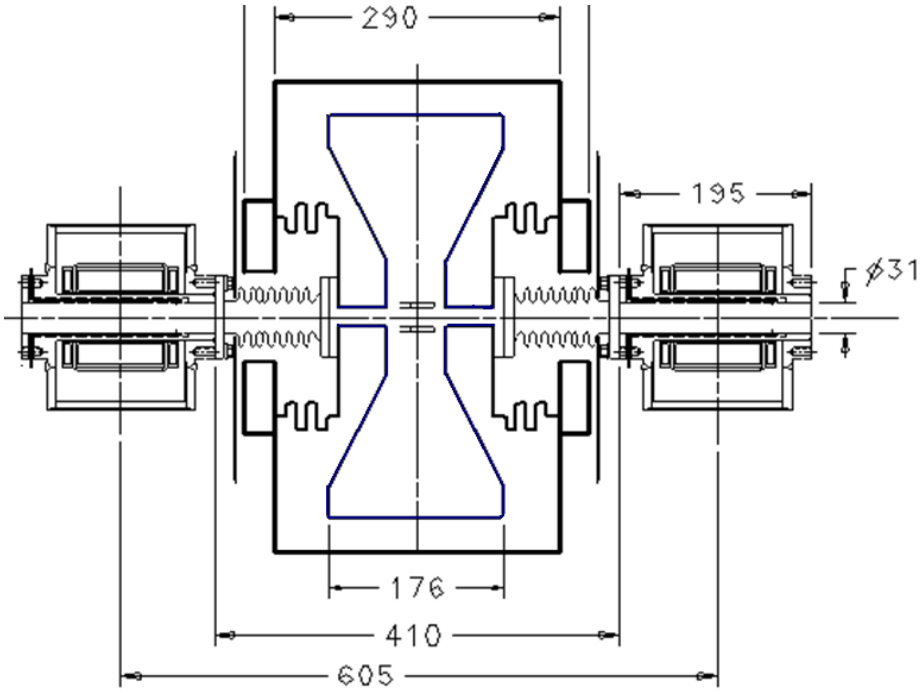

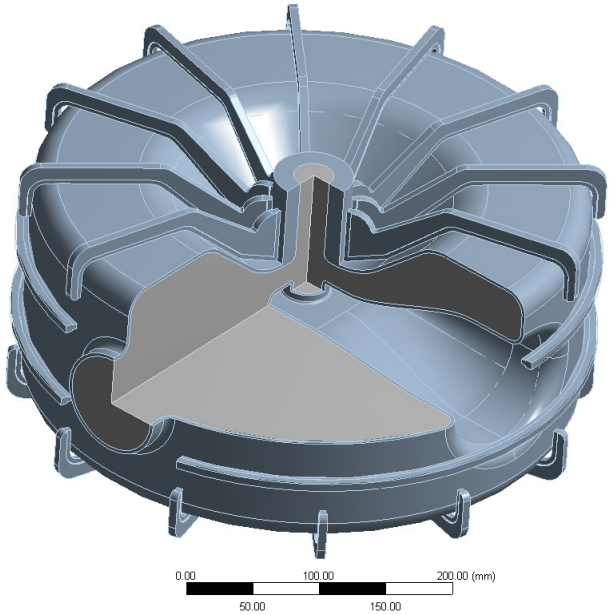

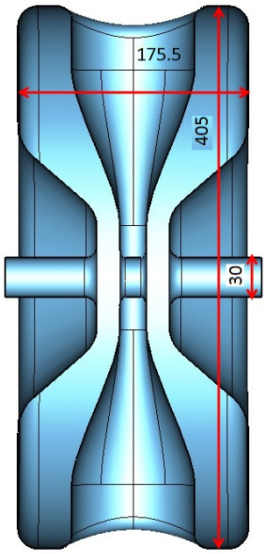

- *Few iterations in concepts of cavity / solenoid designs to minimize period (690→605 mm)*
- *In lattice was used: L_p=610 mm*
- *Solenoid with BPM and correctors is to be designed*
- *Mechanical design: minimizing of df/dP*
- *RF coupler design is in progress*
- *Tuners design*

F(MHz)	325	MHz
$\beta_{optimal}$	0.117	
R_{cavity}	204.3	mm
$L_{wall-to-wall}$	175.5	mm
R/Q	110	Ω
G	52	Ω
E_{max}/E_{acc}	5.97	
H_{max}/E_{acc})	6.89	mT/(MV/m)
$D_{eff}=(2\beta_{opt}\lambda/2)$	108	mm

SSR1 cavity:

Section period

750 mm ➔800 mm
(increased after review)

Cavity status

- 2 prototypes tested (Max gradient 34MV/m at 2K)
- 1st SSR1 dressed
- +2 in production in India
- +10 order from Roark

Solenoid status

- Design is completed 2008
- Prototype in production

Cryomodule

- Design of spoke resonator cryomodule is starting

- **Problems**

Initially the cavity was optimized for pulse operation.
For CW operation modifications may be required.

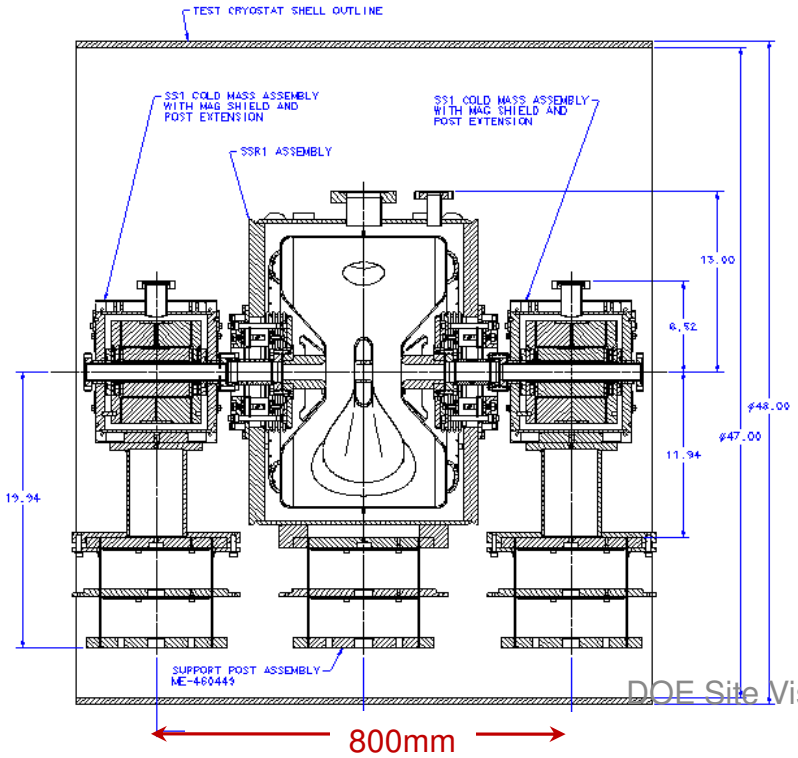

F(MHz)	325	MHz
$\beta_{optimal}$	0.21	
R_{cavity}	245.7	mm
$L_{wall-to-wall}$	295	mm
R/Q	242	Ω
G	84	Ω
E_{max}/E_{acc}	3.93	
H_{max}/E_{acc})	5.8	mT/(MV/m)
$D_{eff}=(2\beta_{opt}\lambda/2)$	193	mm

SSR2 section: cavity, solenoid

SSR2 cavity
- RF design – done (possible changes)
- Mech. design is to be completed.

Latest changes not reflected

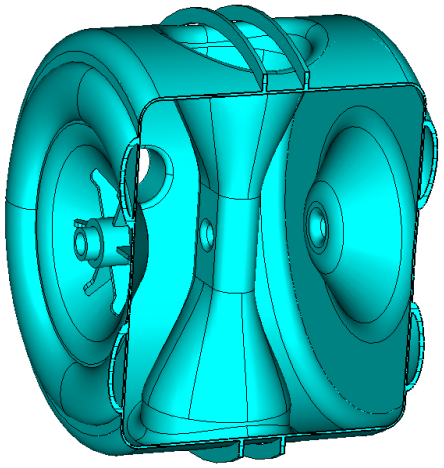

Operating frequency	325	MHz
β_G	0.4	
Cavity Length from wall to wall	406	mm
Dressed cavity length	~530	mm
Cavity diameter	556.2	mm
R/Q	322	Ω
G-factor	112	Ω
Max. gain per cavity (φ-0)	3.16	MeV
Max. surface electric field	33	MV/m
Max.surface magnetic field	54	mT

Solenoid:
- Design completed
- Prototype ready for test (w/o vessel)

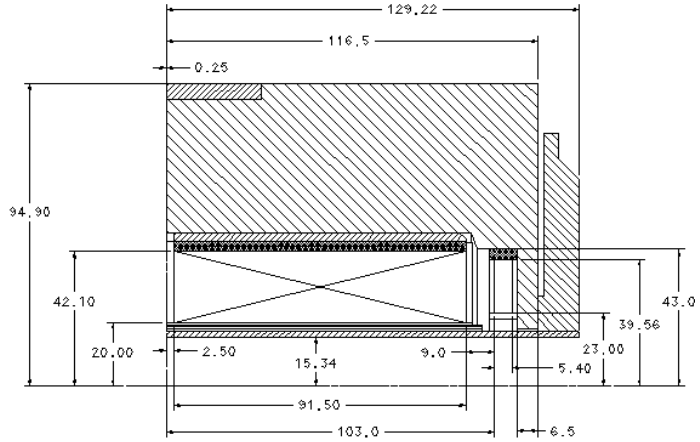

Bore diameter	30	mm
Available slot length	<294	mm
Squared magnetic field integral	580	T^2-cm
Integrated strength of steering dipoles*	0.5	T-cm
Operating current	< 200	A
Fringe field on the walls of cavities	<10	μT

* Corrector provides ~6 mm solenoid centre correction

Period (sol-cav+cav-60 mm) = 1300 mm

650MHz B = 0.9 Single Cell

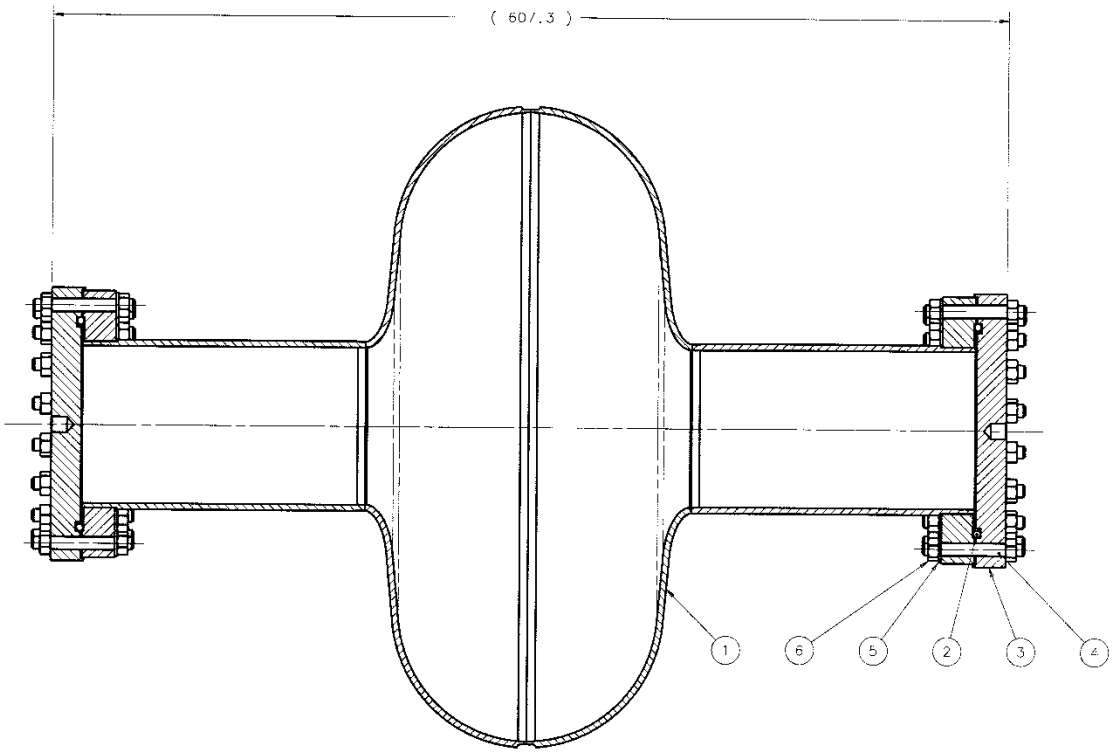

650 MHz, 5-cell cavities

Low-beta

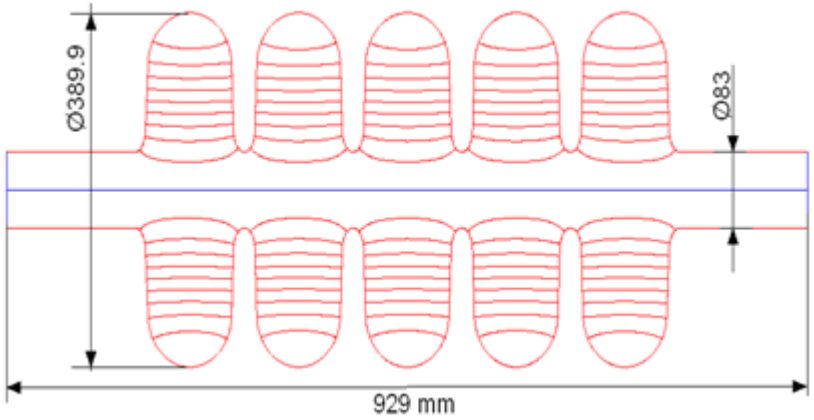

High-beta

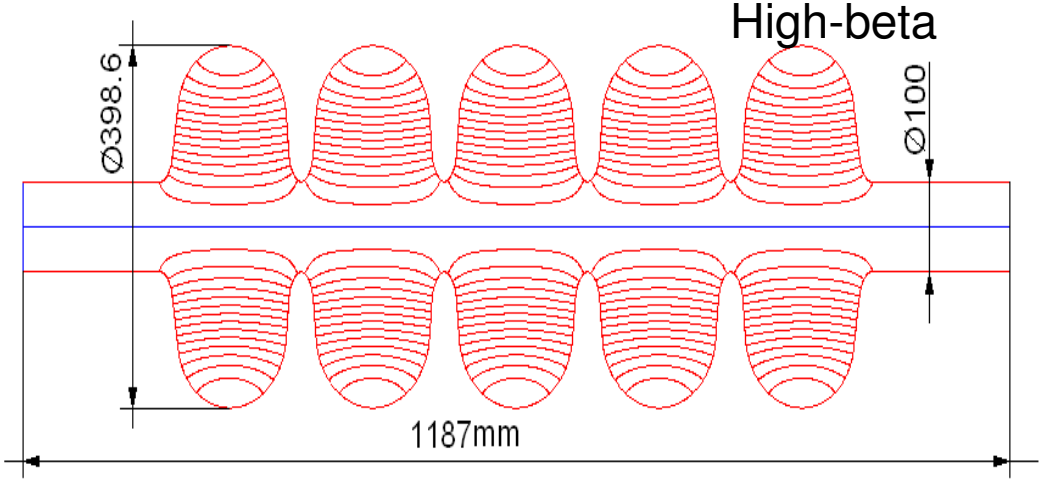

β_G	0.61	0.9	
Length (from iris to iris)	705	1038	mm
Aperture	83	100	mm
Cavity diameter	389.9	400.6	mm
R/Q, Ohm	378	638	Ω
G - factor	191	255	Ω
Max. gain per cavity (φ-0)	12.0	19.9	MeV
Gradient	17.1	19.2	MV/m
Max surface electric field	38.6	38.4	MV/m
Max surf electric field	72	72	mT

Preliminary layout of a beta=0.9 650 MHz 5-cell cavity

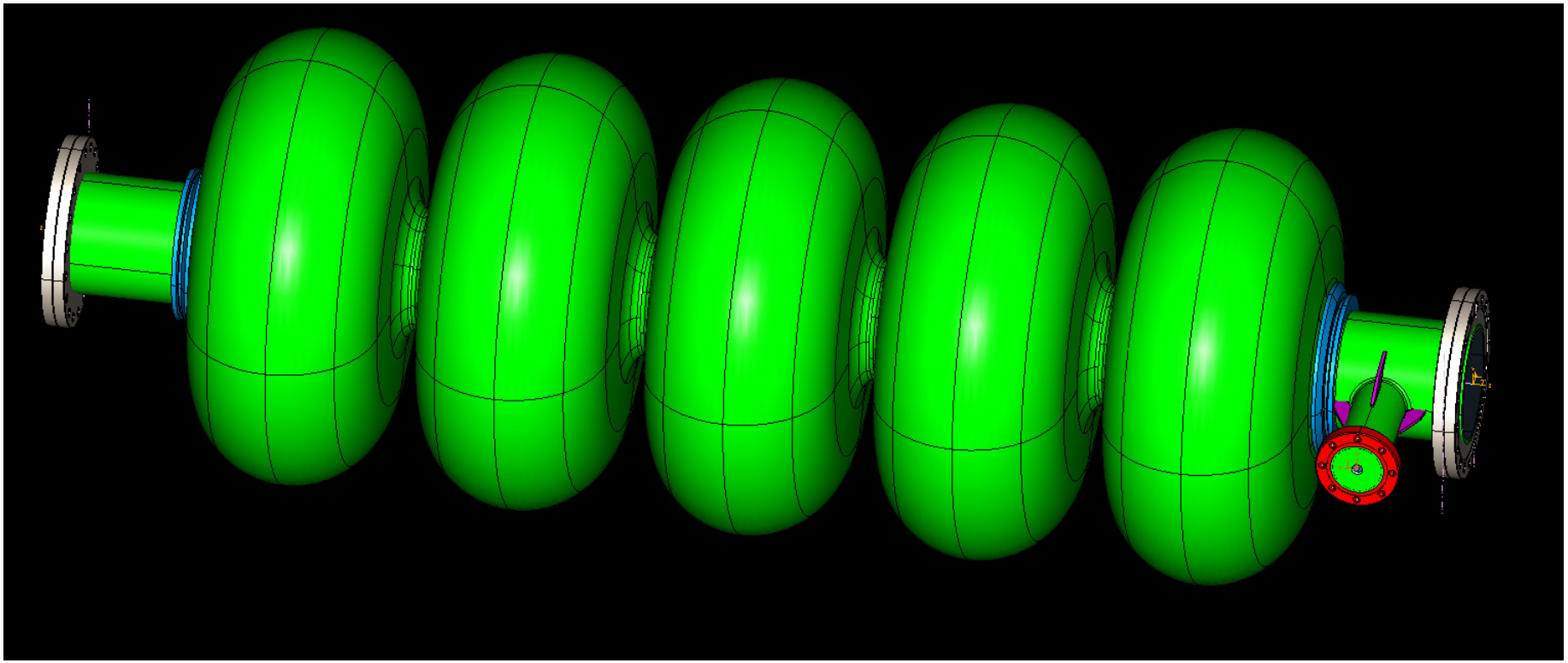

- EM design of the cavity is finished;
- Mechanical design is underway: df/dP, tuners, RF coupler
- HOM couplers?

650MHz coupler, preliminary mechanical design

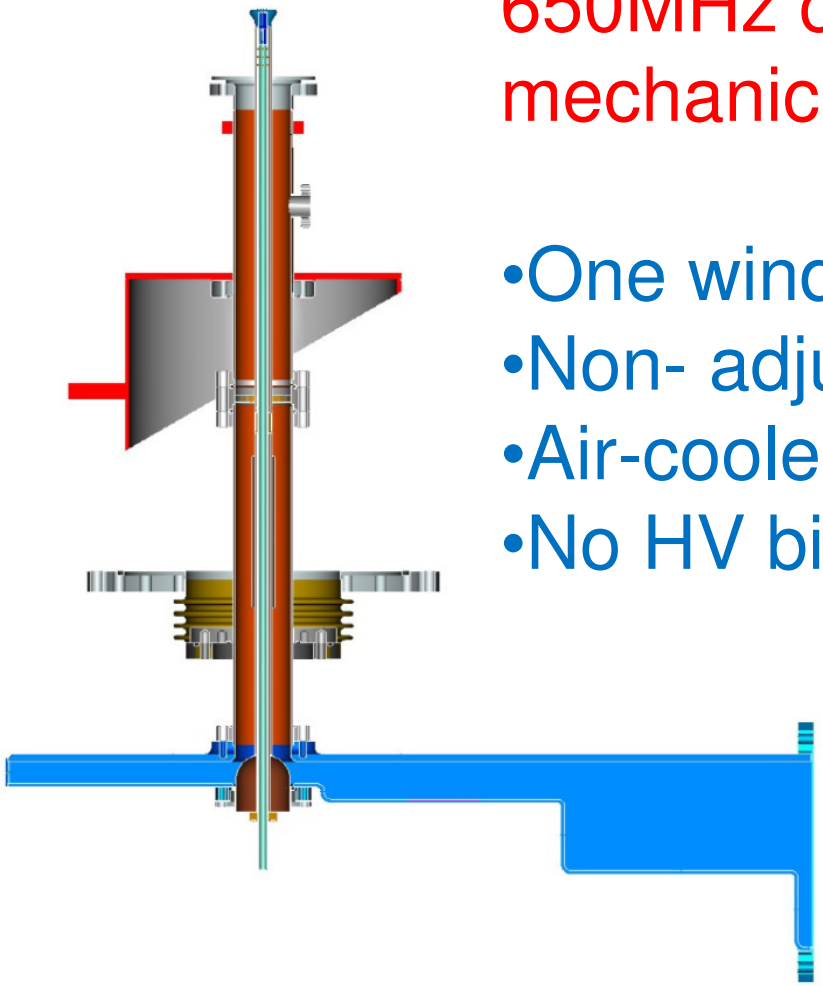

- One window;
- Non- adjustable
- Air-cooled;
- No HV bias.

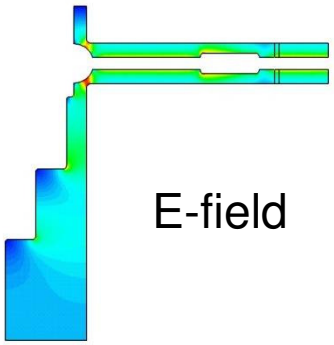

E-field

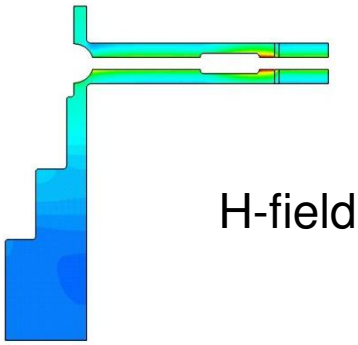

H-field

Max. E-field in air is 4.3 kV/cm for 30 kW input power

Pulse power limitation ≈ 650 kW (TW)

	2K (Flow/Plant),W	5K(Flow/Plant), W	70K(Flow/Plant), W	Total plant,W
RF = 0kW	0.04 / 28.1	0.99 / 196	7.85 / 62.8	287
RF = 20kW	0.065 / 45.7	1.27 / 251.5	8.55 / 68.4	366
RF = 30kW	0.078/ 54.8	1.41 / 279.2	8.87 / 71.0	405

Summary of the Cavity Parameters

Low energy SC Linac (2.5 – 160 MeV)

cavity type	F req MHz	$U_{acc,\,max}$ MeV	E_{max} MV/m	B_{max} mT	R/Q, Ω	G, Ω	$Q_{0,2K}$ $\times 10^9$	$P_{max,2K}$ W
SSR0, β=0.117	325	0.78	53	59.5	120	57	9.5	0.77
SSR1, β=0.22	325	1.53	34.4	50.8	242	84	14.0	0.94
SSR2, β=0.4	325	3.16	33	54	322	112	18.0	2.07

High energy SC Linac (160 – 3000 MeV)

cavity type	Freq. MHz	L_{eff} mm	E_{acc} MV/m	E_{max} MV/m	B_{max} [mT]	R/Q Ω	G Ω	$Q_{0,2K}$ $\times 10^9$	P_{2K} [W]
LB650, 5-cell, β=0.61	650	705	17.1	38.6	72	378	191	15.0	24.1
HB650, 5-cell, β=0.9	650	1038	19.2	38.4	72	638	255	20.0	29.2
ILC, 9-cell, β=1	1300	1038	16.9	34	72	1036	270	15.0	19.0

RFQ and 2.5 MeV Beamline

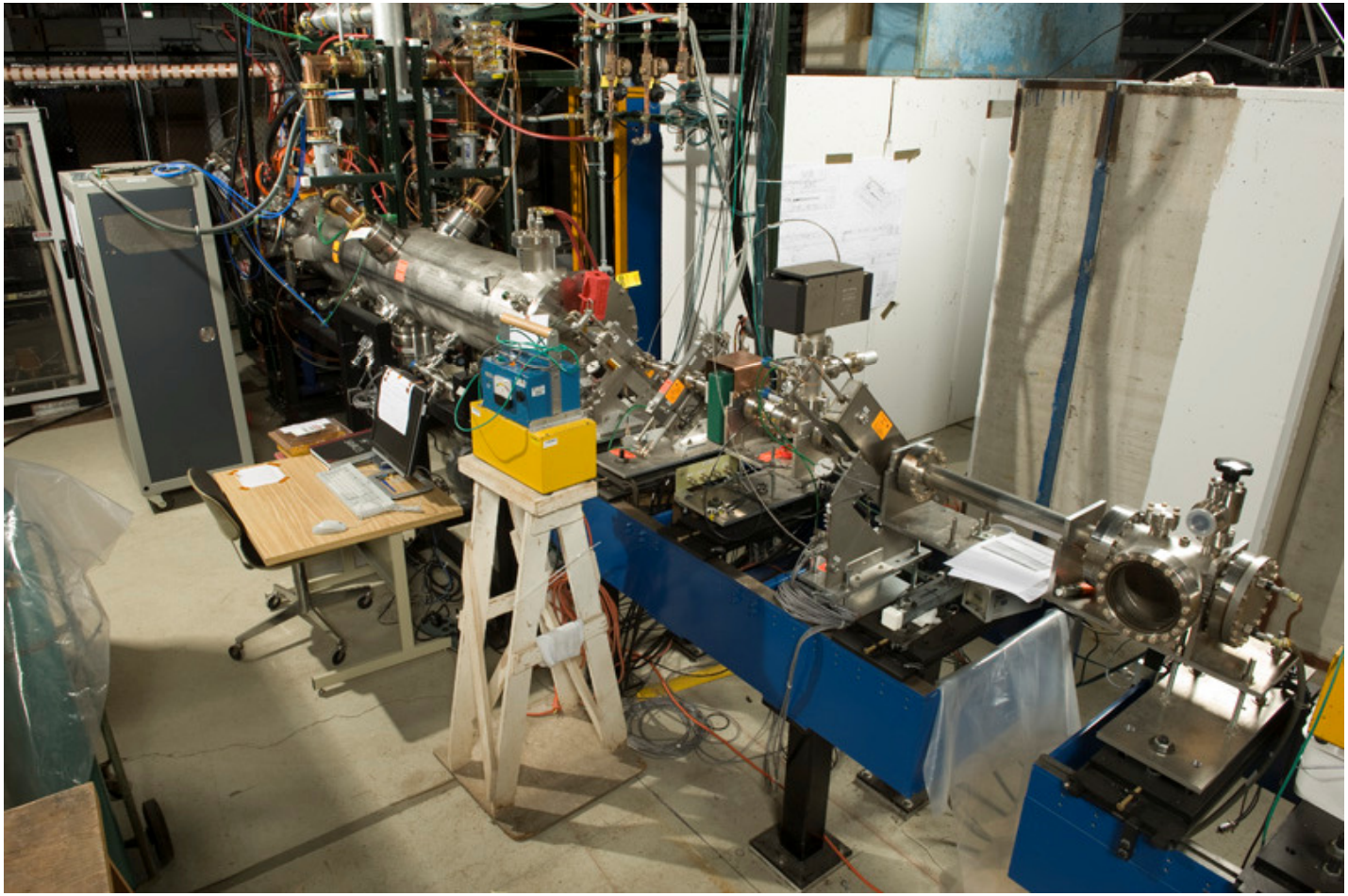

RFQ and 2.5 MeV Beamline

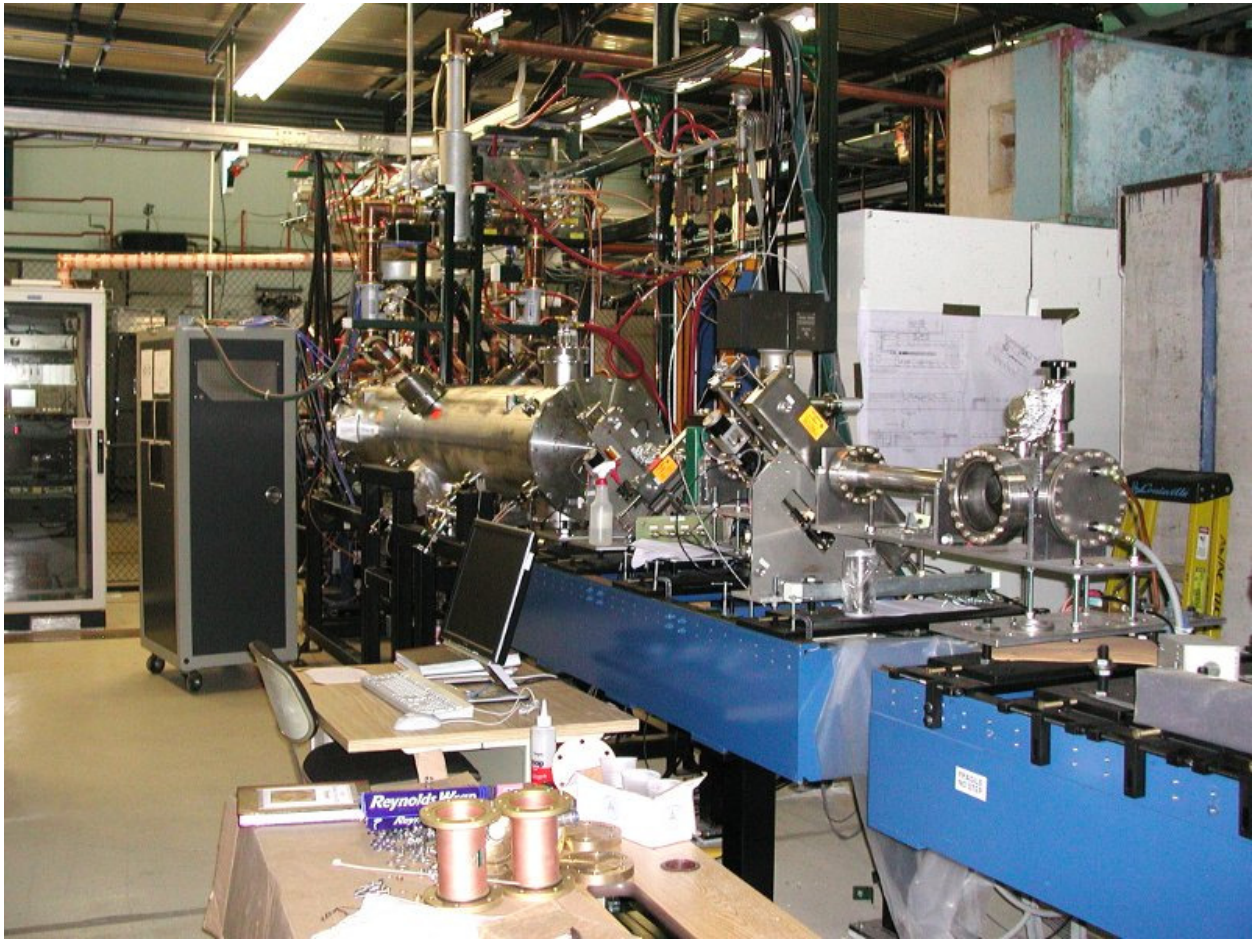

Spoke Cavity Input Coupler Test Stand

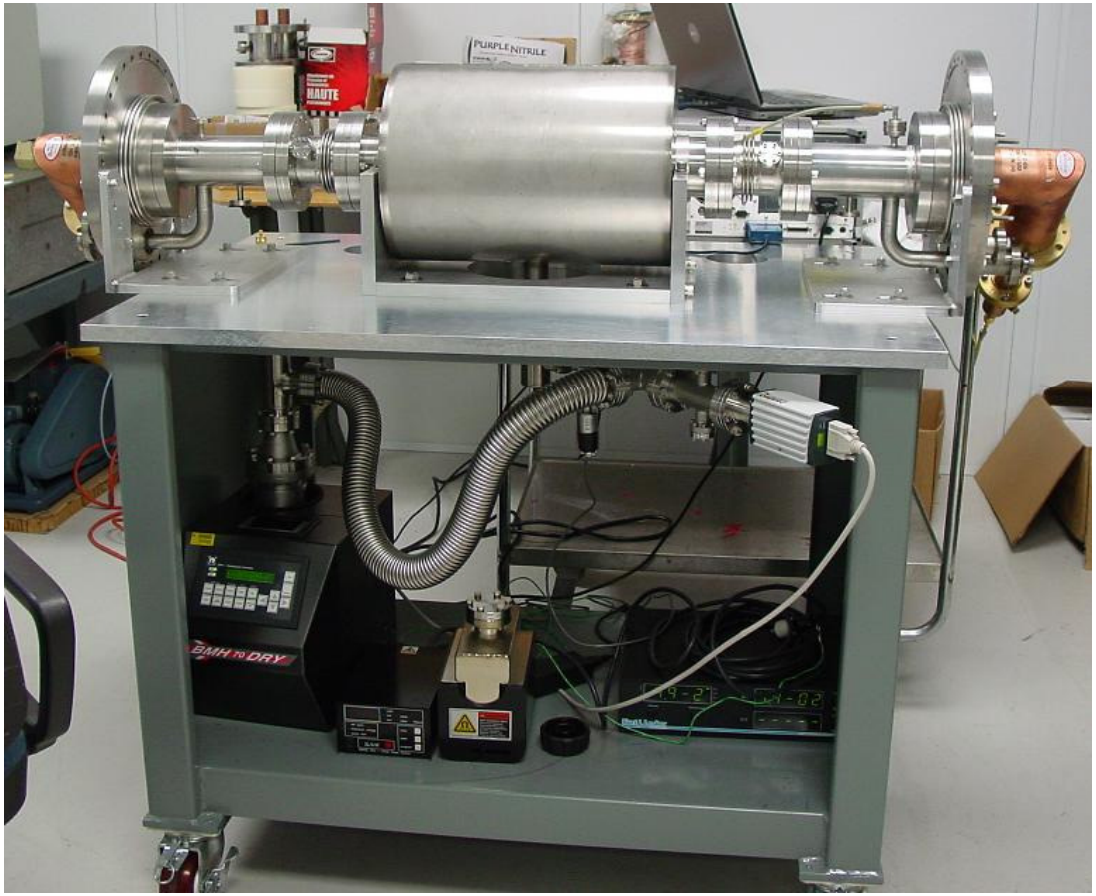

First full-power coupler tests have been successfully completed

Wall Thickness for 650 MHz

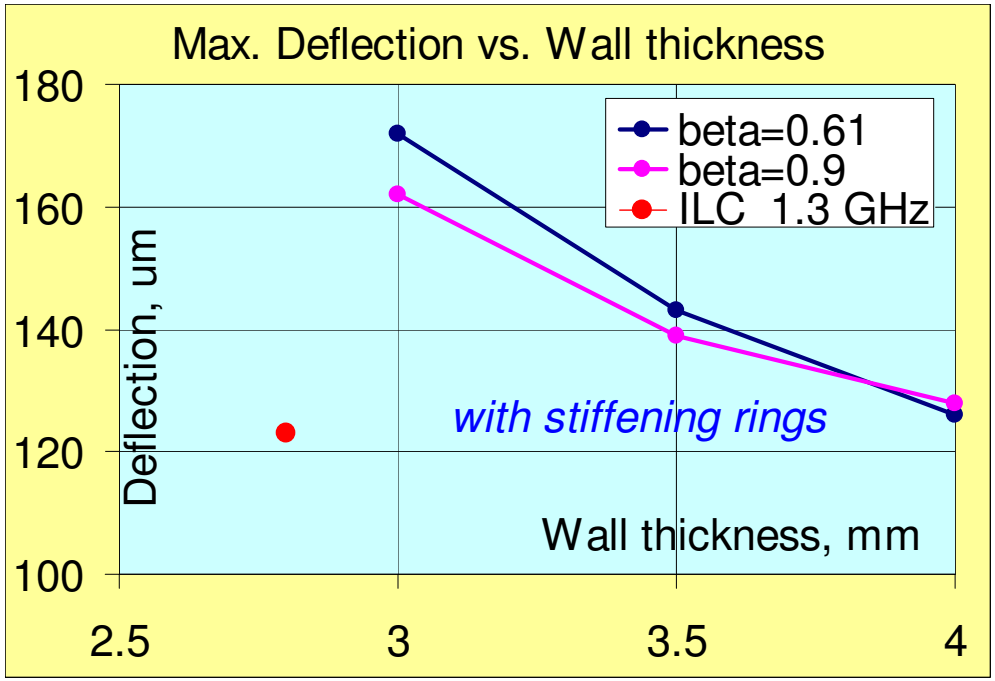

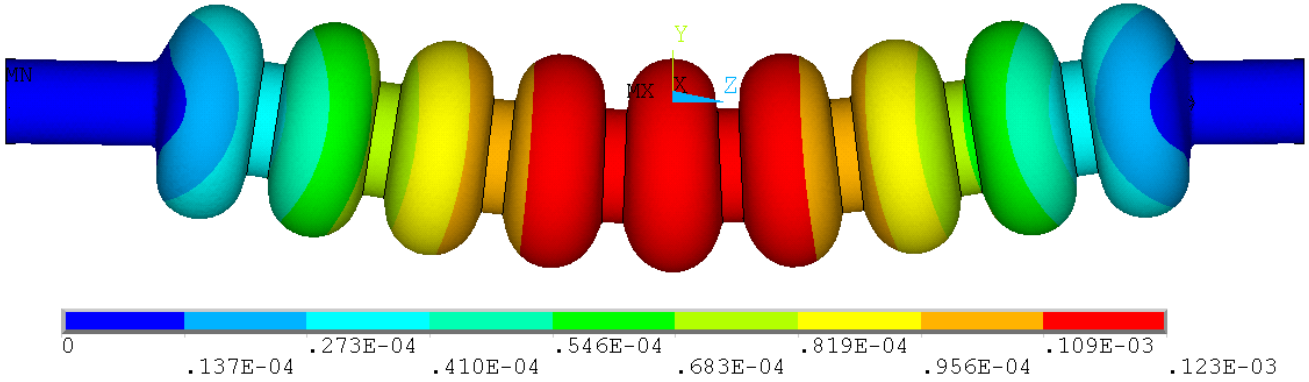

Max. sag of an ILC cavity is 123 μm for 2.8mm wall thickness.

We selected the wall thickness ~ 4 mm.

650 MHz, beta=0.9, 5 –cell cavity geometry

Project X

Left cell

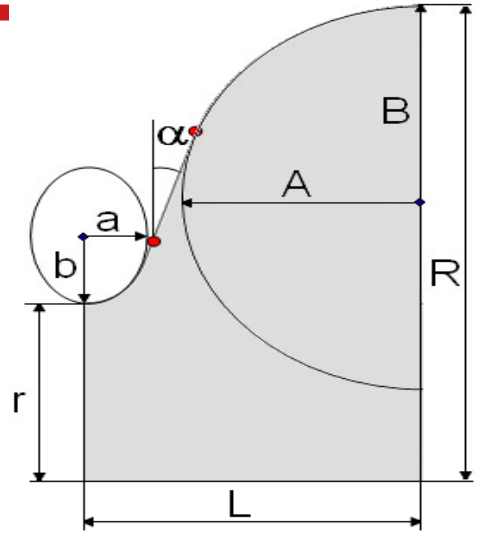

r	50
R	200.277
L	106.971
A	82.5
B	84.5
a	20
b	39.5
α	7.02

Regular cell

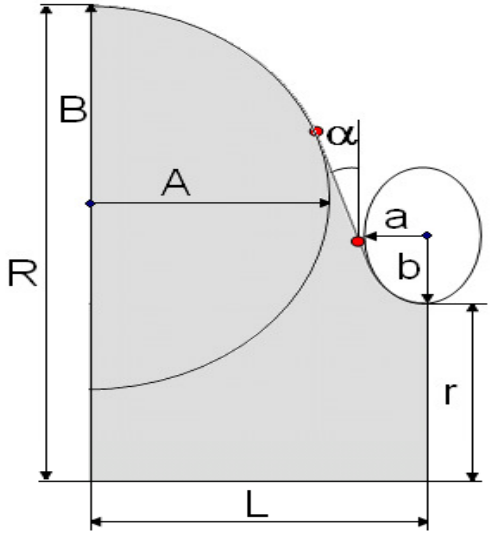

r	50
R	200.277
L	103.75
A	82.5
B	84
a	18
b	38
α	5.2°

Right cell

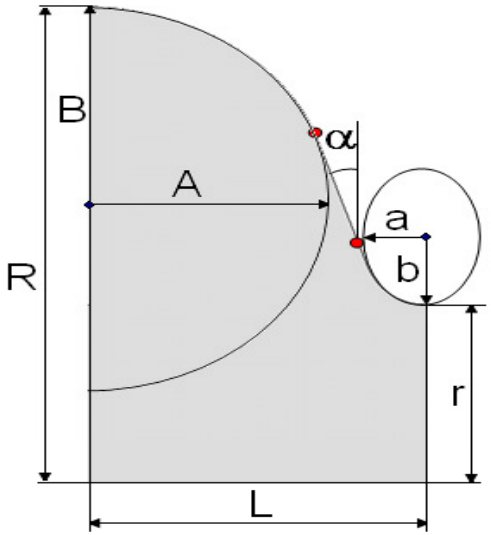

r	50
R	200.277
L	106.971
A	82.5
B	84.5
a	20
b	39.5
α	7.02

All dimensions are in mm.