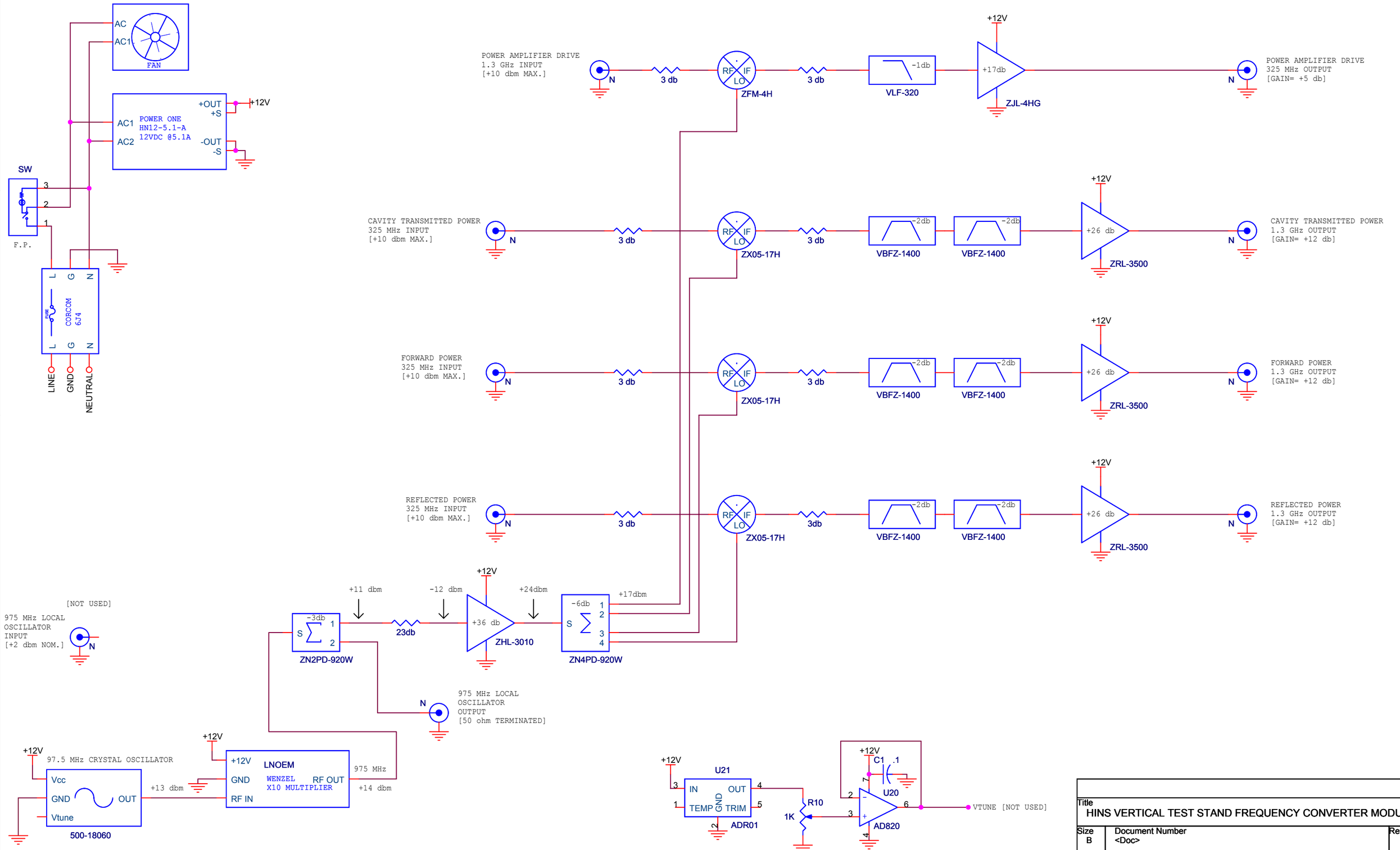

Title
HINS VERTICAL TEST STAND FREQUENCY CONVERTER MODULE

Size	Document Number	Rev
B	<Doc>	

Date: 8/29/07 Sheet 1 of 1