Project X Update

Valeri Lebedev, Sergei Nagaitsev and Slava Yakovlev
Fermilab

Fermilab
March 8, 2010

Objectives

- To show the logic of the Project X development
- To discuss where we are now and future possible developments
- To discuss SRF work required to put the project on right track

Contents

- Issues with Initial Configuration-1 (IC-1)
- Objectives for Initial Configuration-2 (IC-2)
- Short description of IC-2 and its possible choices for further developments
- SRF work required to keep us on the fast track
- Conclusions

Project X Initial Configuration - 1 (IC-1)

- IC-1 has been based on ILC-technology with a pulsed, 1.3GHz SC linac
  - Objectives for the initial proposal, 2007
    - 2 MW at (60 -120 GeV) in MI
    - ILC technology test
    - Replacement for a ~40 year-old Booster & Linac
  - Final IC-1 (as spring of 2009)
    - 2 MW at (60 -120 GeV) in MI
      - for LBNE
    - ~300 kW for 8 GeV program
      - Mu2e upgrade (slow extraction)
    - Reduced coupling to ILC
    - Improved but still comparatively narrow physics program

IC-1

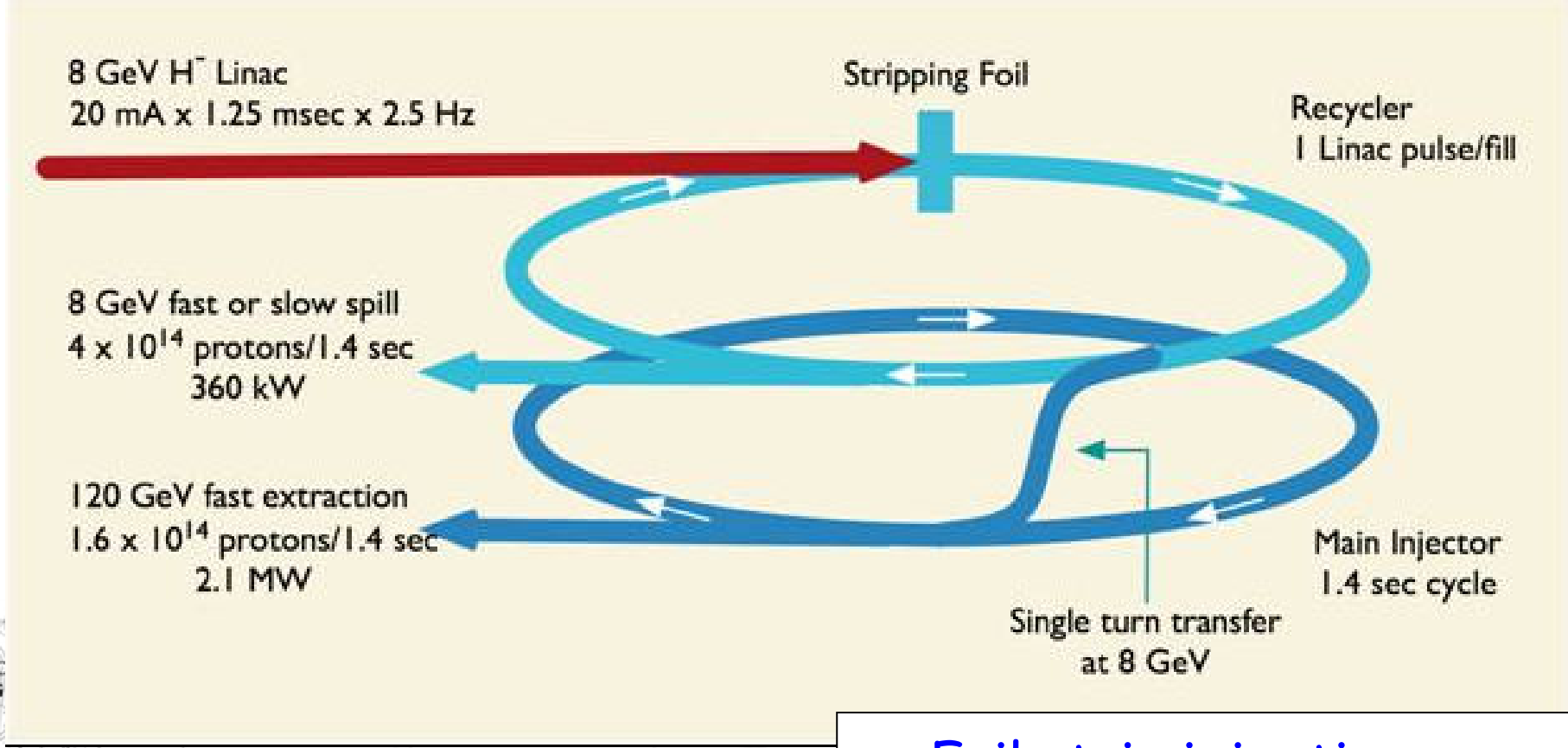

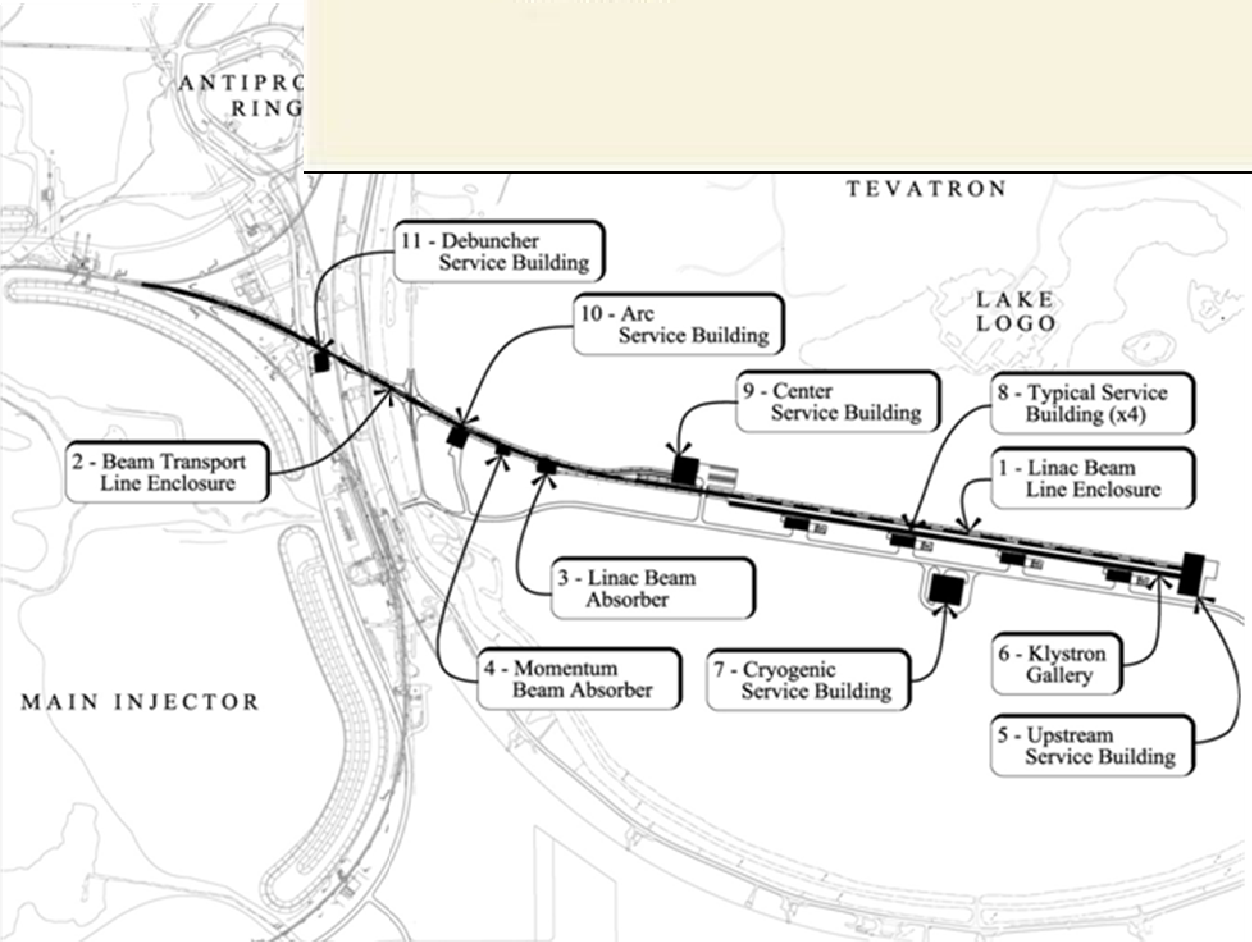

- Foil strip injection
- Large bending radius
  - Magnetic field stripping
- Cooled transfer line
  - Stripping due to blackbody radiation

IC-1 issues

- Slow extraction
  - ~70 kW demonstrated at Tevatron and AGS (1TeV&25 GeV)
  - High power ⇒high efficiency of slow extraction is required
  - Large ratio of acceptance to core emittance
- Slow extraction for mu2e
  - Only at 8 GeV (set by Recycler)
  - Small duty factor: 50 of ~500 ns (η~0.1)

    ⇒ Large tune spread due to beam space charge (γ^2/η~100)
- Mitigation of slow extraction problems
  - 3 ring scheme: Recycler – Accumulator - Debuncher
- Only one experiment can be supported

  Different time structure is required for different experiments
  - Rigid time structure – difficult & expensive to change

Objectives for Initial Configuration – 2 (IC-2)

- 2 MW at 60-120 GeV in MI
  - Same as IC-1

    LBNE, …
- 8 GeV program with a single turn extraction (≥100 kW)

  g-2, …
- Diverse program with muons & kaons

  μ-to-e, $K \rightarrow \pi\nu\nu$, …
  - Different experiments require different time structures
  - Power on the target has to be rather limited by event rate than by the available beam power
  - CEBAF is an example of such machine with e-beam
- Experiments in other fields
  - Nuclear physics and materials, energy

Project X IC-2

- IC-2 concept (as of end of summer 2009)
  - 2.0 GeV CW linac
    - potentially "unlimited power"
    - stable beam parameters
  - RF separation + bunch-by-bunch chopping
    - Multiple experiments operating simultaneously
    - Independent bunch structure control
  - "Pulsed" 2-to-8 GeV acceleration (10 Hz, 4.2 ms) to support MI program
    - Both RCS or pulsed SC linac are a good choice
- Results of November 2009 physics workshop
  - Energy of CW linac needs to be increased to 2.6 - 3 GeV
  - Better signal to background for experiments with kaons

IC-2 developments

- Development of IC-2 concept started in March, 2009
- It was supported by Physics Advisory Committee in June 2009 and by Accel. Advisory Committee (Nov 2009)
  - Highest priority since then
- Two reports were released at the end of 2009
  - Report on physics part
    "Report from the ICD-2 Research Program Task Force"
  - Report on accelerator part
    "Project X Initial Configuration Document – 2"

IC-2

- Linac current has to be ≥ 1 mA to support 2 MW in MI
- Transfer line is shorter than in IC-1 (no cooling)

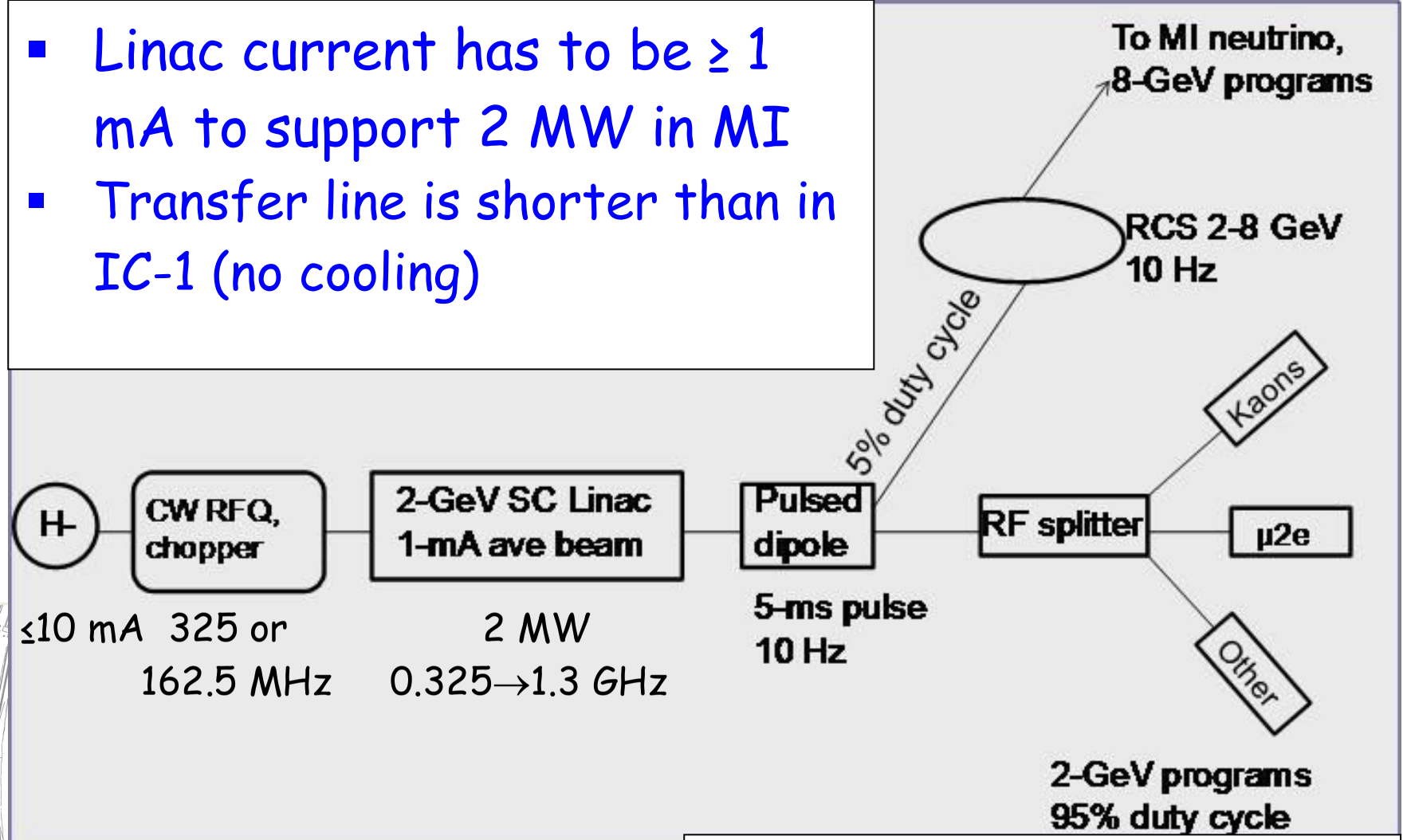

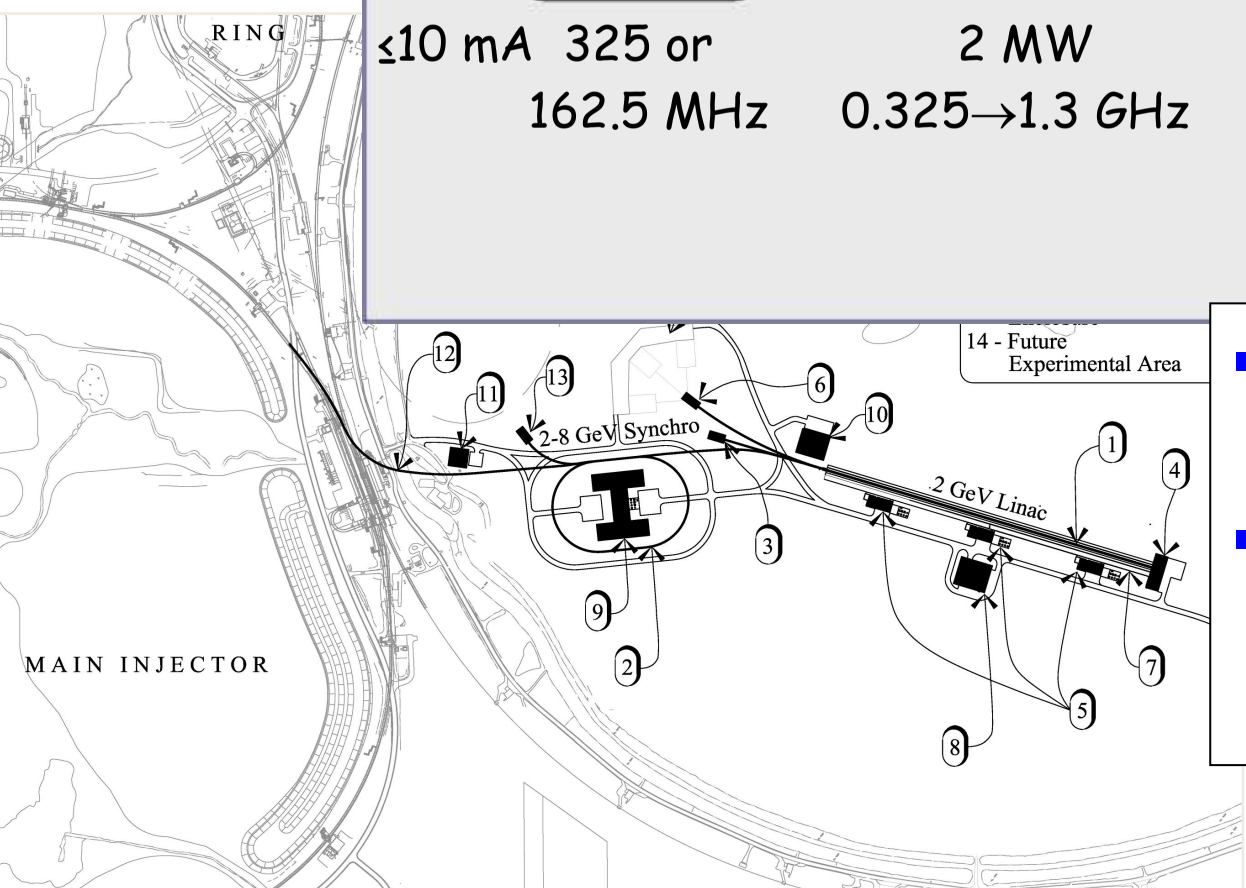

- Bunch length, ≤10 ps(rms)
  - Time of flight
- If required, more than 3 experiments can operate simultaneously

IC-2 linac layout

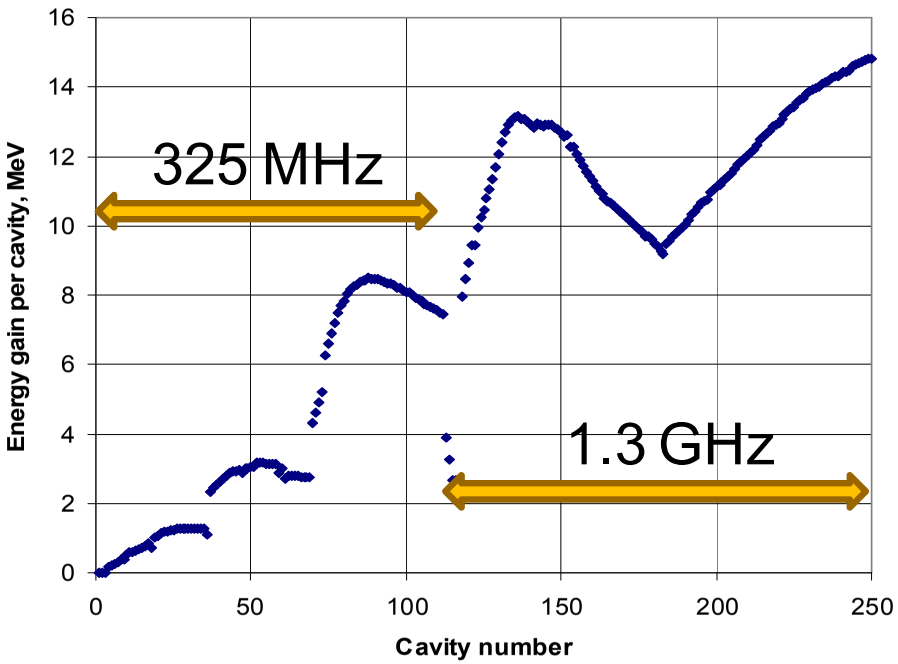

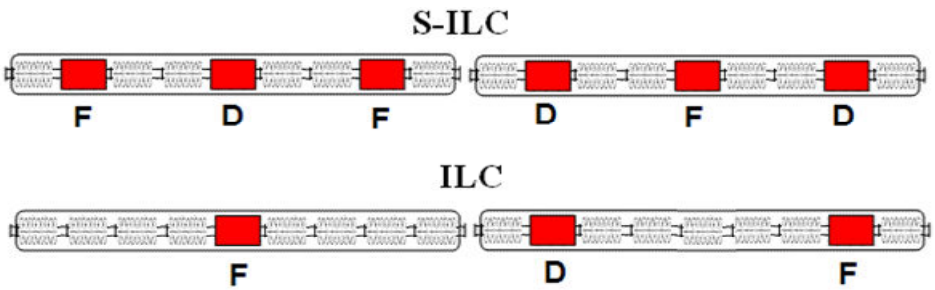

RF separation

- One RF separator can split linac beam into 2 or 3 beams
  - 3-rd sub-harmonic splitter – splits beam in 3 equal beams (CEBAF like)

    f_b = 162.5 MHz

    $f_{exp} = f_b/3 \approx 54$ MHz

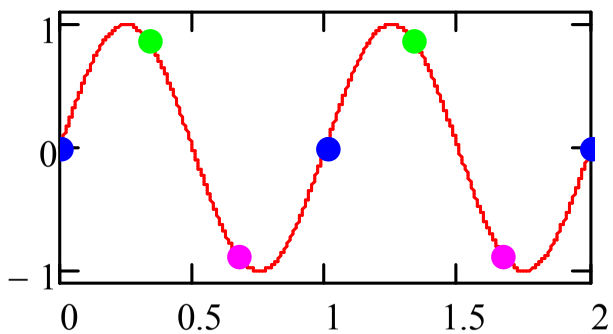

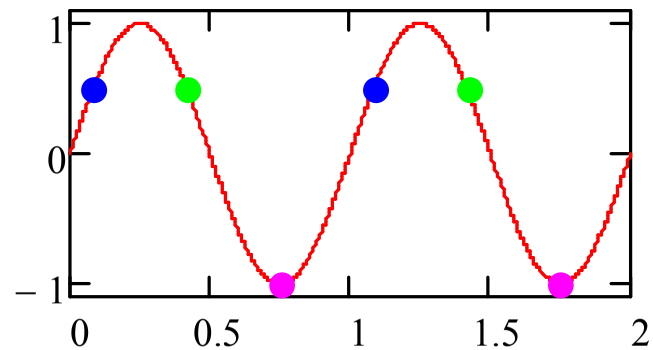

  - 4-th sub-harmonic splitter – one of 3 beams has twice larger intensity

    f_b = 162.5 MHz

    $f_{exp} = f_b/2 \approx 81$ MHz

    $= f_b/4 \approx 40.5$ MHz

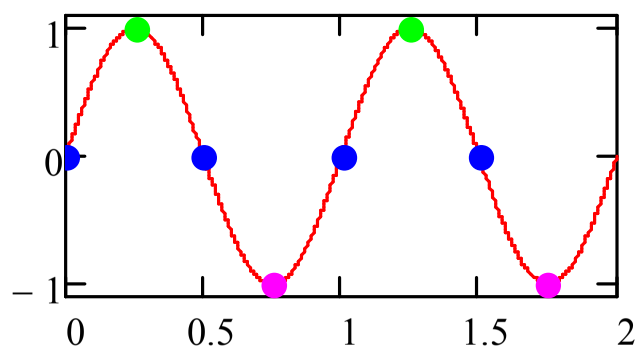

RF separation (continue)

- ICD-2 RF splitter:
  - 4 SC cavities ,
  - $f_{RF} = (2+1/4)f_b = 365.625$ MHz,
  - L=4.5m
  - $\theta = 5$ mrad
  - $E_{\perp}L=5$ MeV

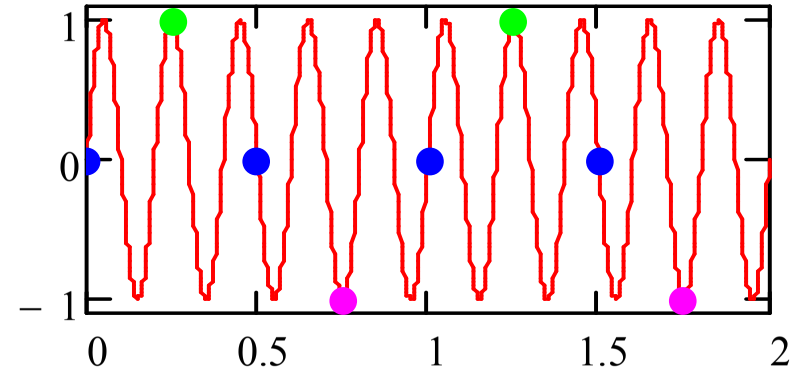

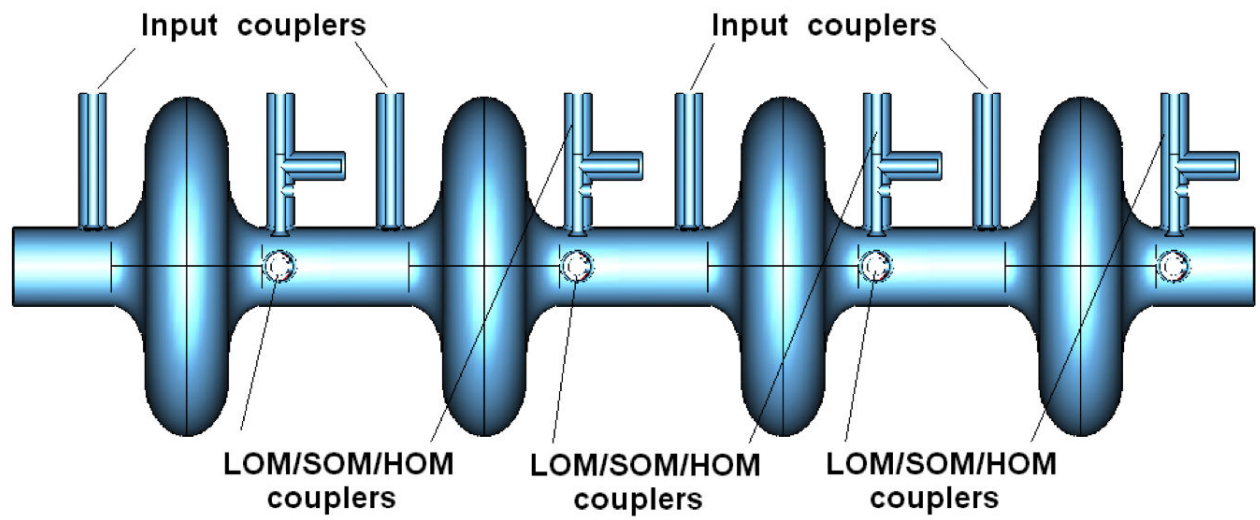

- Additional RF separators allow simultaneous operation for more than 3 users
  - Bunch frequency and power for each experiment will be smaller

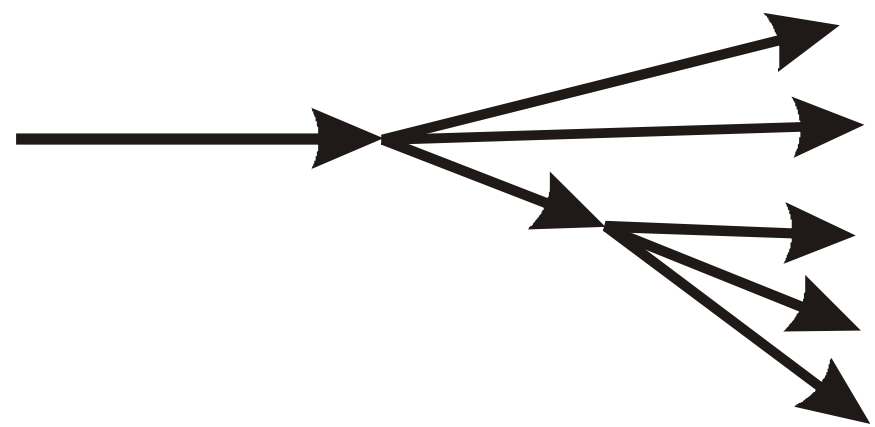

Beam chopping

- Bunch-by-bunch chopper supports a bunch structure required for each experiment
  - Setting desired structure on-line
  - Digital control of chopping pulses with FPGA
  - Wide band amplifier, ~1 GHz

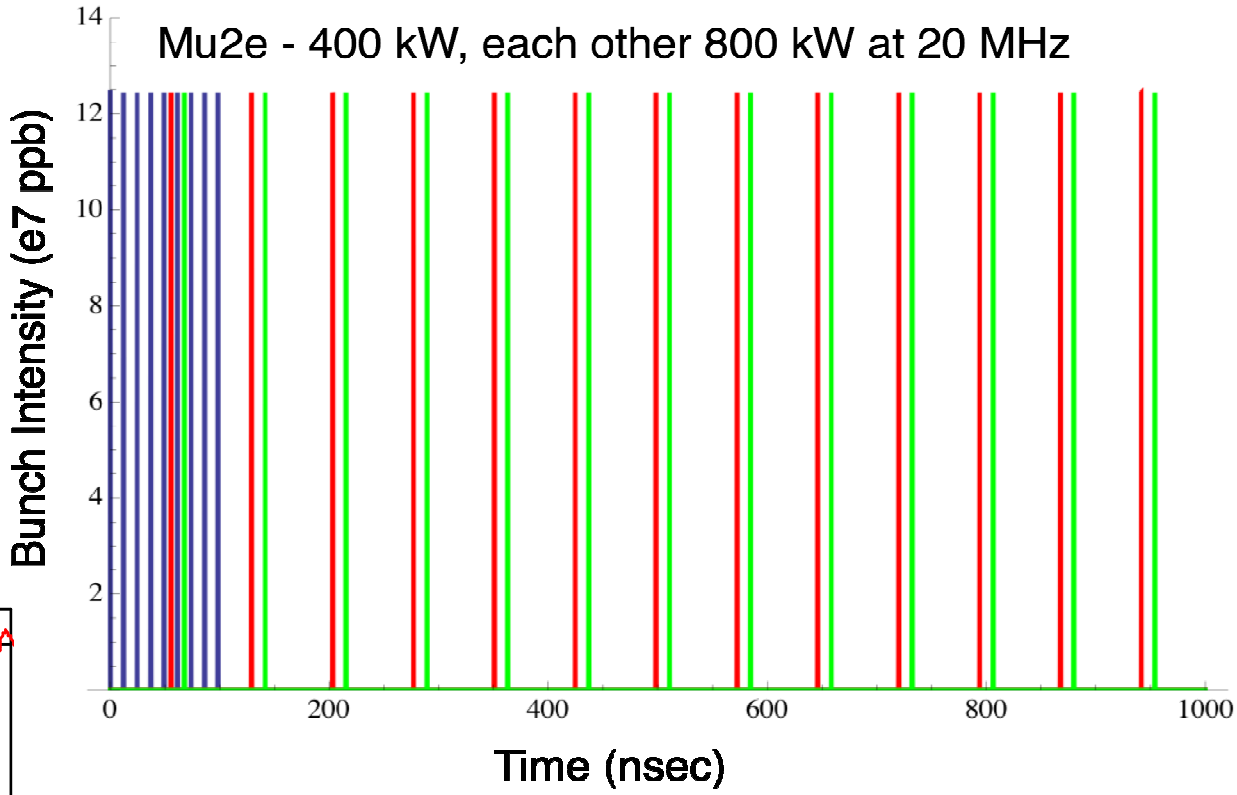

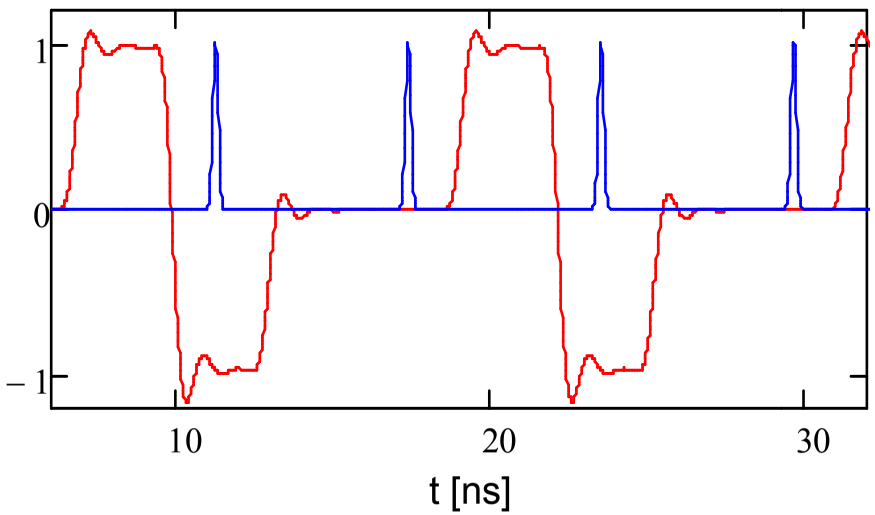

- Set time structure
- Adjust ion source current to get 1mA in linac

Beam chopping (continue)

- Chopper challenges
  - CW operation + wide band (50 Ω) → Limited power
    - → small kick → Large length of the system
    - → amplifies space charge problems
  - Bunch space charge can create tails
  - SSRO section has
    - short period - 65 (70?) cm
    - Large phase advance per cell ~90/70 deg
    - Small beta-functions – $\beta_{max\ (x,y,s)} \approx 70$ cm
  - Chopper section as part of MEBT should not have too different periodicity and beta-functions

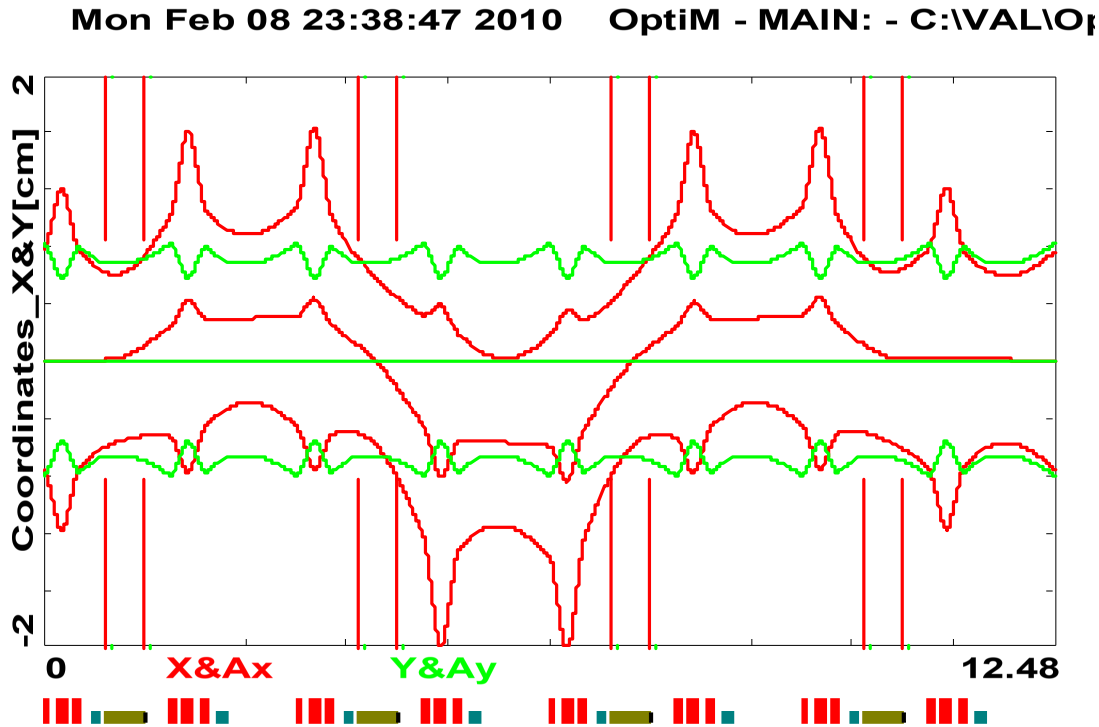

*0.4 mm mrad, 0.5 m kickers (2*350 V, 2*8.5 mm) (2*400 V, 2*8.6 mm)*

- Recent changes
  - Shortening of kickers (1 -> 0.5 m) and introduction of cavities results a kicker voltage increase: 225 -> 350 V
- Next step implies
  - Matching to linac frontend
  - Minimization of Space charge effects
  - Meander optimization or choice more reliable option

Recent Developments of Project X

- All recent changes for the project X look logical and well aimed from inside (not necessarily from outside)
  - Step 1
    - IC-1 $\rightarrow$ IC-2: improves the physics program
      $\Rightarrow$ IC-1 deficiencies with SRF linac were not addressed in IC-2 to make more accurate cost comparison
  - Step 2
    - Transition to 650 MHz and other recent changes address these deficiencies
  - Step 3 (we are at the very beginning now)
    - R&D and engineering of the SRF cavities
- We understand well the Project X physics base and believe that further development will not affect basic structure of the linac
  - Choice of frequencies and accelerating structure types (SSR0, SSR1, SSR2, elliptic β=0.6 & β=0.9: 650 MHz, elliptic 1.3 GHz)

Factors Determining Project X Development

- Constraints
  - Physics program needs to be finalized
  - CD-0 is delayed (wrt our expectations)
  - DoE may want to stage the project
  - Desire to be compatible with Muon collider needs
    - Needs are known but feasibility of the collider are not!!!
- Other circumstances
  - Development of SRF cavities requires more time than other Project X components (~2 more years)
    - DoE plans to have a vigorous support of the Project X SRF ($40M/year for 5 years)
- Conclusions
  - To accelerate and strengthen the project
    - Start the development of ALL Project X SRF cavities

Project Staging

- Several staging choices are possible
- These choices do not affect the structure and engineering of CW linac

SRF issues:

- *Thus, Project –X is a multi – user experimental facility based on the SC linac providing the H^- beam having the following parameters:*

- Energy -3 GeV,
- Average current – 1 mA,
- Pulse current – up to 10 mA,
- Power - 3 MW in a CW mode.

- *Basic technical features that determine the linac general concept:*

- High reliability;
- Acceptable beam losses (activation);
- Repairability

Approaches:

- *Front end:*

- High initial longitudinal beam emittance from RFQ:
- Consequently, strong longitudinal focusing is necessary;
- Small focusing period;
- Reduced acceleration gradient.

- *High-Energy part of the linac:*

- Higher effective accelerating gradient (650 MHz)

Why 650 MHz?

The cavity acceleration efficiency depends strongly on the number of cells:

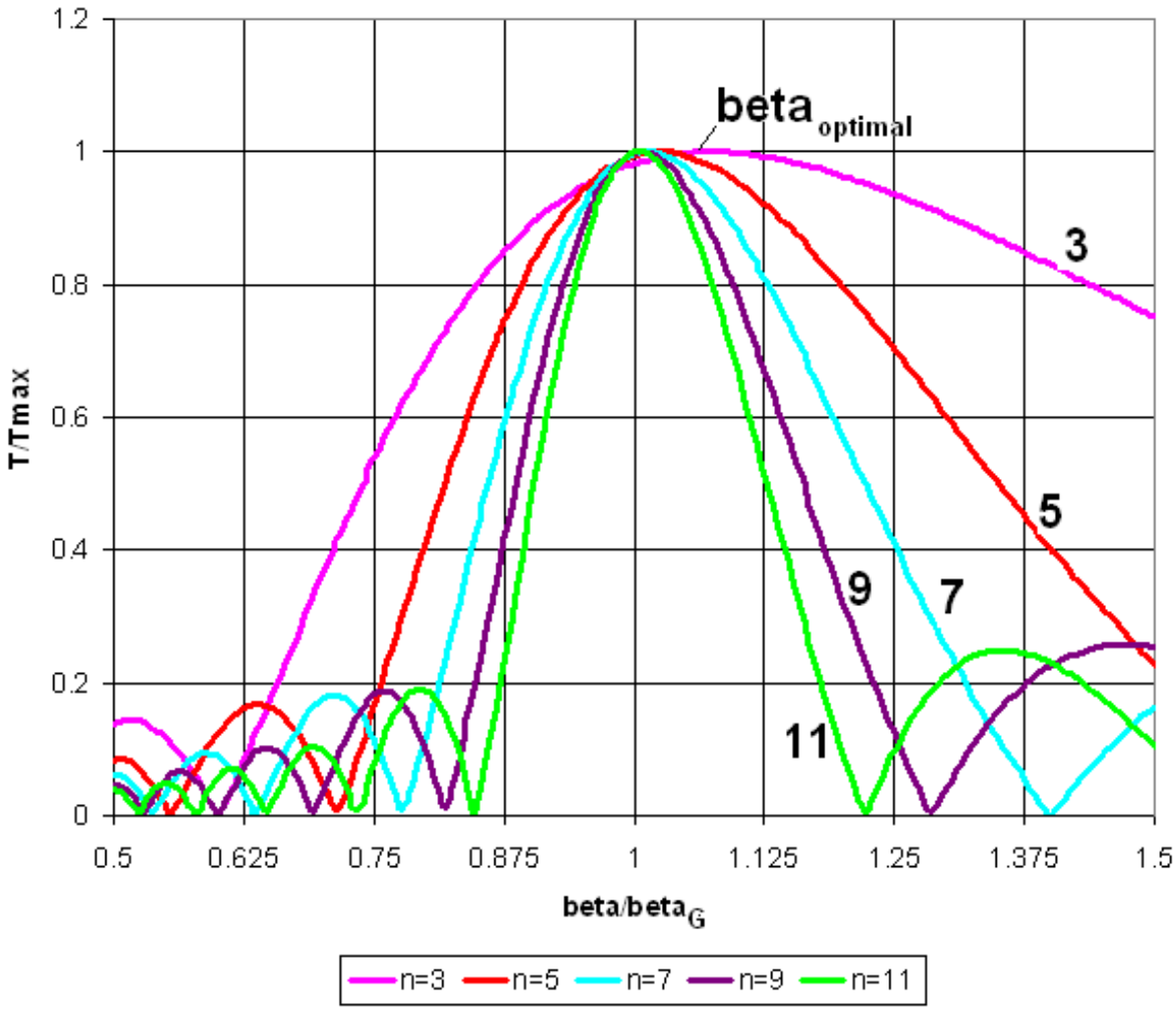

Geometric beta :

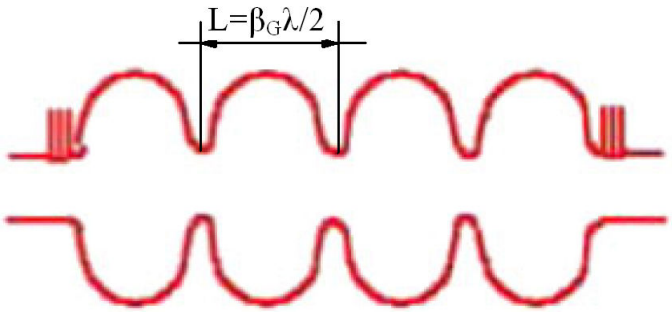

Optimal beta ≠ geometric beta

n is the number of cells in a cavity.

In order to increase operating range of a cavity one should decrease the number of cells.

ICD-1 version:

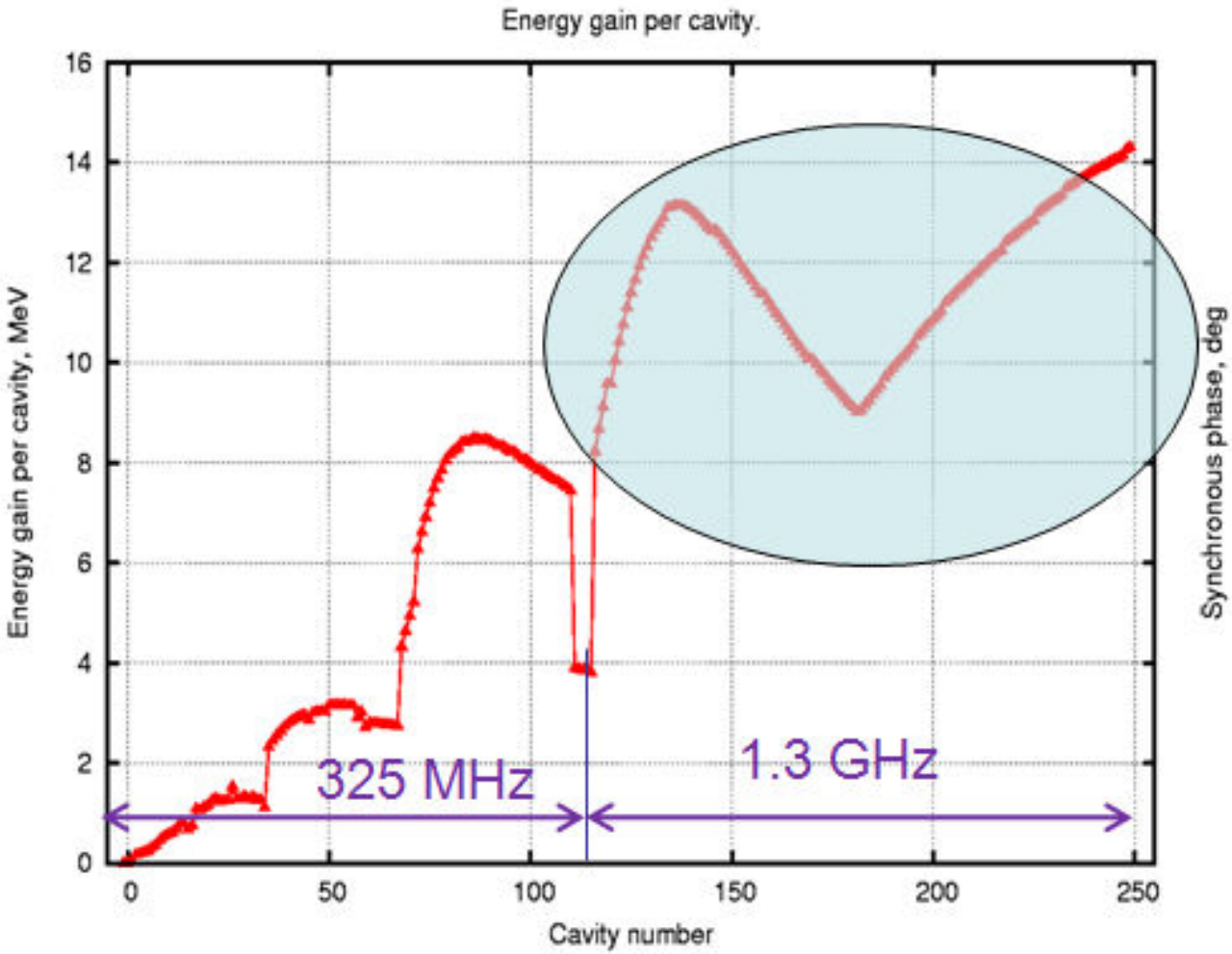

The energy gain per cavity

- Choice: 650 MHz, 5-cell cavity:
  - The same length as for ILC-type cavity (1090 mm for β=0.95);
  - About the same maximal energy gain per cavity;
  - The same power requirements.
- Benefits compared to 1.3 GHz ILC-type cavity:
  - Higher accelerating efficiency ➔ smaller number of cavities and RF sources:
    - Higher transit-time factor
    - Possibility to use smaller (a/λ) ratio ➔ smaller field enhancement factors
  - Beam dynamics
    - 2-fold frequency jump instead of 4-fold ➔ easier transition)
    - Smaller beam losses;
    - Less effect of cavity focusing (~1/ λ)
  - Smaller cryogenic losses, mostly because of smaller number of the cavities
- **Trade-off:**
- more serious problem with microphonics, but still may be manageable;
- RF infrastructure requirements will need to be reviewed for incompatibilities with the existing 1.3 GHz program infrastructure.
- 650 MHz, β_G=0.6 elliptical cavity instead of TSR:
  - Elliptical cavity is more simple;
  - Provides higher gradient;
  - TSR design doesn't exist

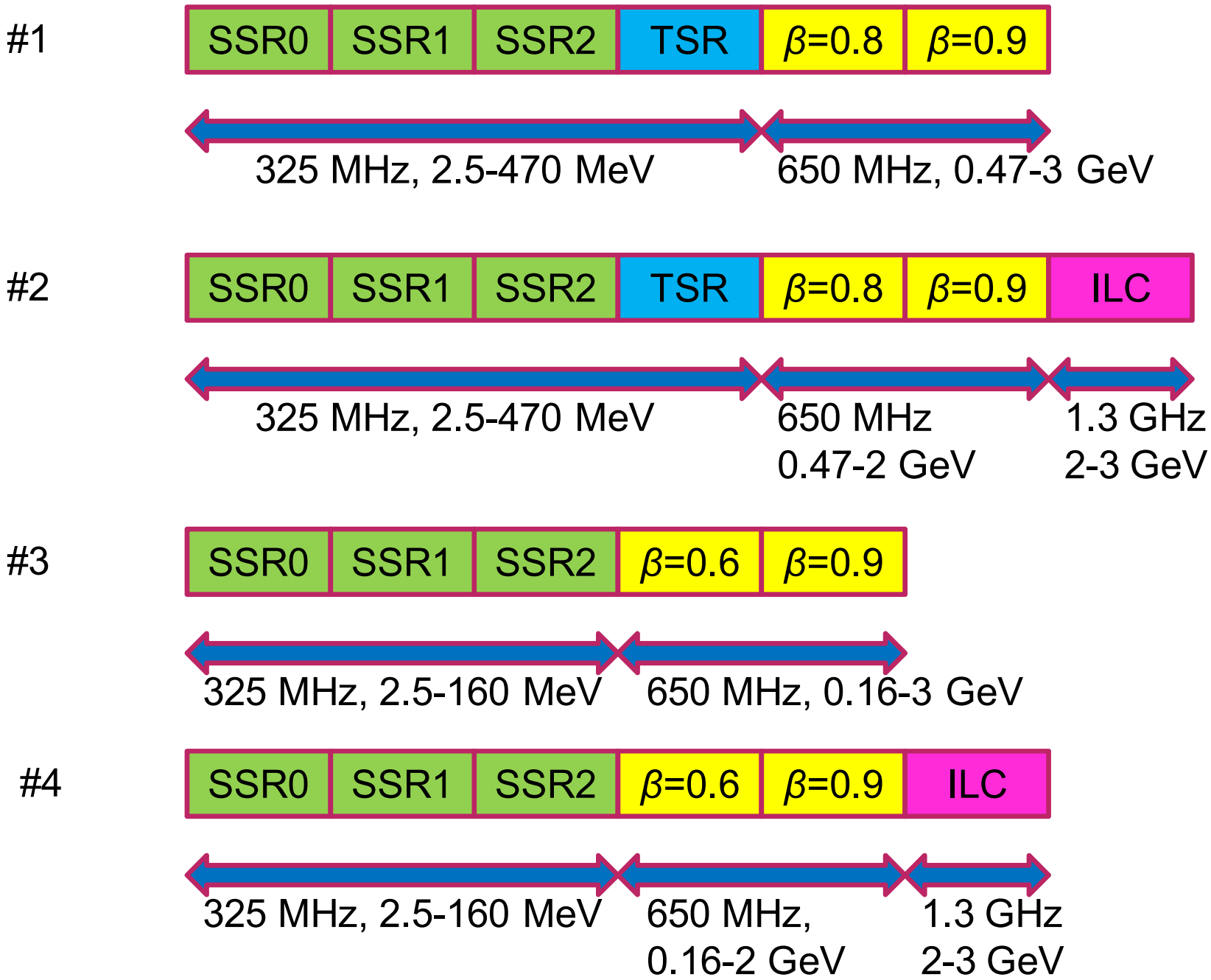
#1
SSR0
SSR1
SSR2
TSR
β=0.8
β=0.9
325 MHz, 2.5-470 MeV
650 MHz, 0.47-3 GeV
#2
SSR0
SSR1
SSR2
TSR
β=0.8
β=0.9
ILC
325 MHz, 2.5-470 MeV
650 MHz
0.47-2 GeV
1.3 GHz
2-3 GeV
#3
SSR0
SSR1
SSR2
β=0.6
β=0.9
325 MHz, 2.5-160 MeV
650 MHz, 0.16-3 GeV
#4
SSR0
SSR1
SSR2
β=0.6
β=0.9
ILC
325 MHz, 2.5-160 MeV
650 MHz,
0.16-2 GeV
1.3 GHz
2-3 GeV

Scheme for 3 GeV CW Linac with 650 MHz cavity, "option #4".

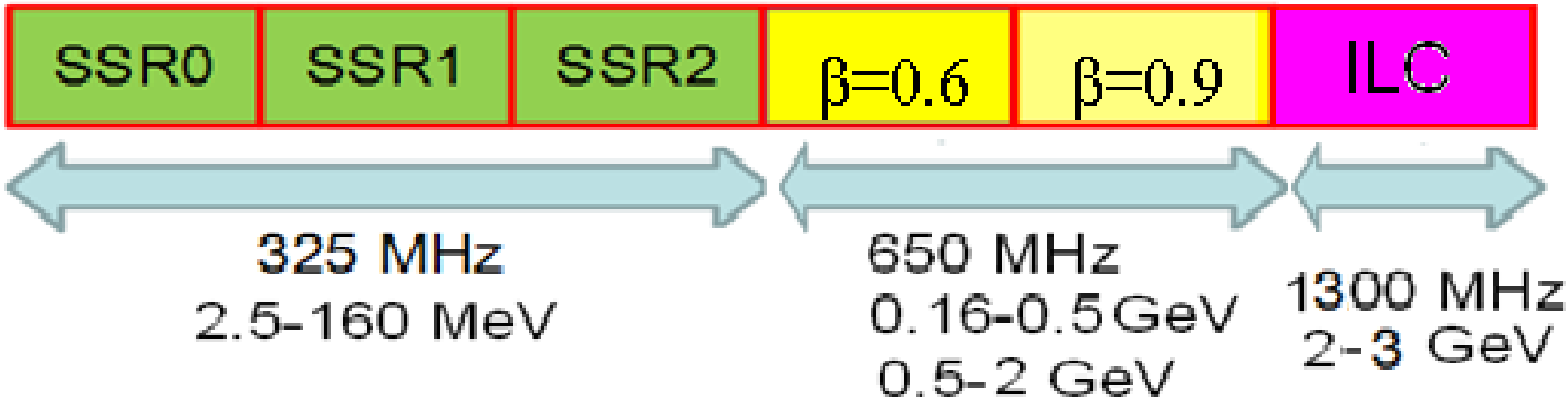

- "Physics design" for beam dynamics is completed: beam dynamics is understood and optimized for regulars lattices, break points and cavity types are determined;
- Next step is to clarify the CM segmentation, number of cavities/CM, and gaps between CMs.

Energy gain/cavity in IC-2v2.0

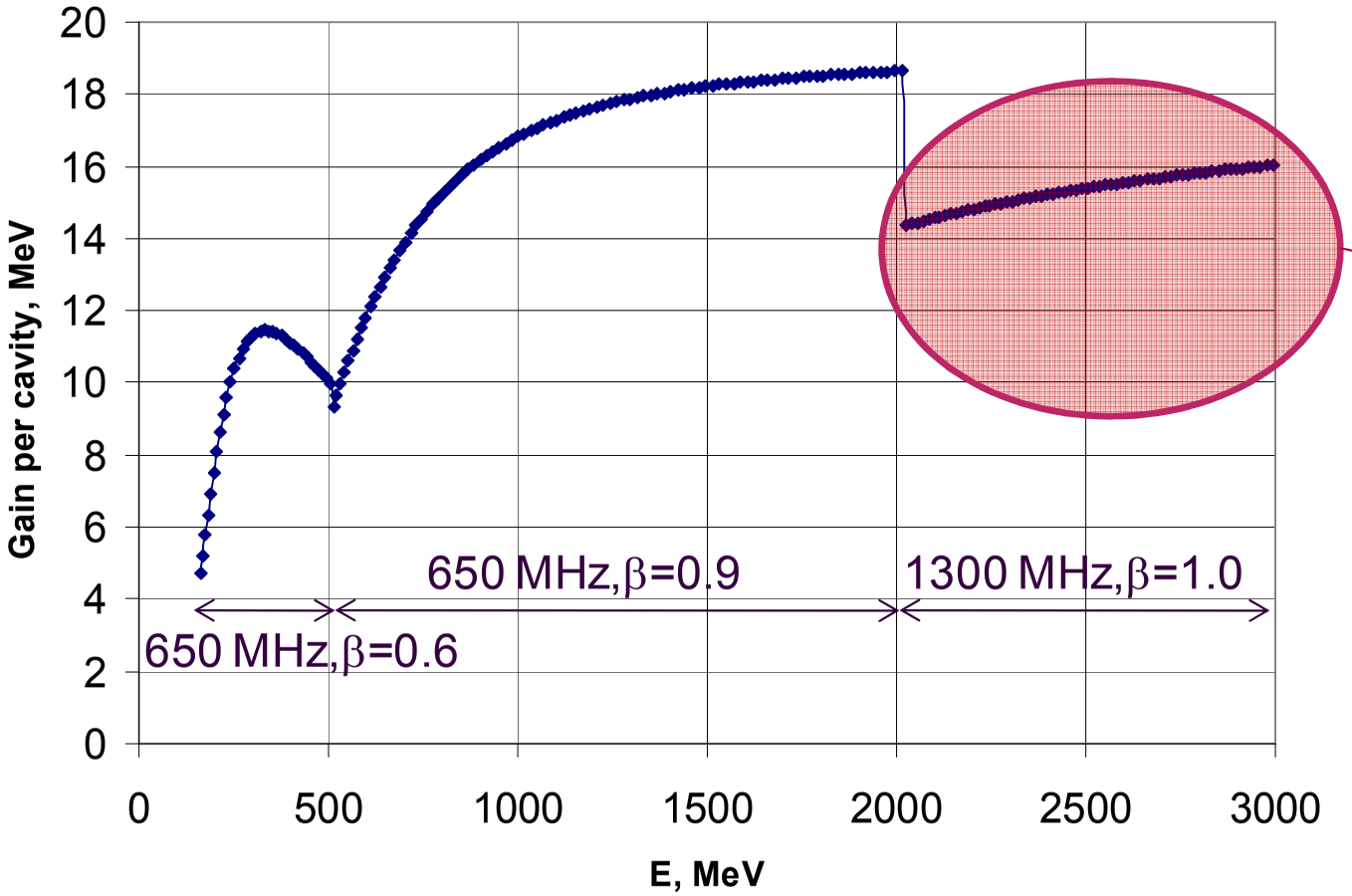

Discontinuity can be effectively eliminated with a β=0.95 cavity

Cavities of the option #4, preliminary version.

Section	Energy range MeV	β	Number of cavities*	Type of cavities	Maximal power per cavity**, kW
SSR0 (β_G=0.11)	2.5-10	0.073-0.146	26	Single spoke cavity.	0.5
SSR1 (β_G=0.22)	10-32	0.146-0.261	18	Single spoke cavity.	1.5
SSR2 (β_G=0.4)	32-160	0.261-0.52	44	Single spoke cavity.	3.2
650 MHz (β_G=0.6)	160-500	0.52-0.758	42	Elliptic cavity	11.5
650 MHz (β_G=0.9)	500-2000	0.758-0.95	96	Elliptic cavity	18.5
1300 MHz (β_G=1)	2000-3000	0.95- 0.97	64	Elliptic cavity	16

*Status for March 8, 2010. Number of cavities may vary depending on exact cryomodule design.

**Without overhead ($I_{average}$ = 1mA)

SSR0 section: to be designed, fabricated and tested.

E-field

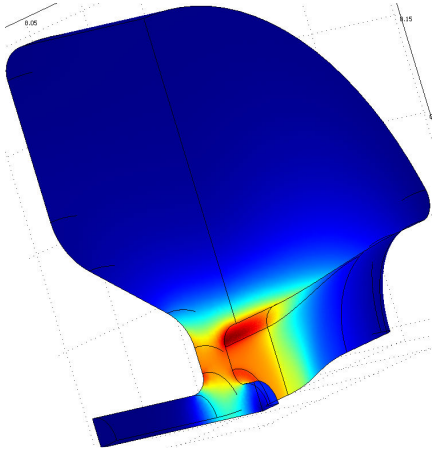

H-field

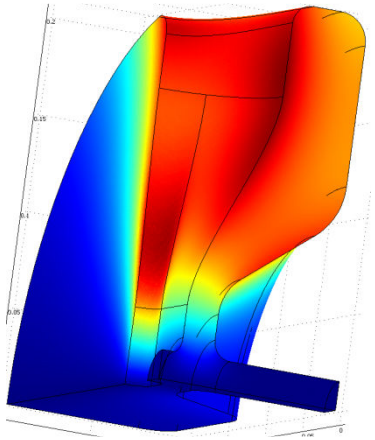

F(MHz)	325
$\beta_{optimal}$	0.117
R_{cavity},mm	204.3
L wall to wall,mm	175.5
R/Q, Ω	110
G, Ω	52
E_{max}/E_{acc}	5.97
H_{max}/E_{acc} (mT/MV/m)	6.89
$D_{eff}(2*\beta opt\lambda/2)$,mm	108

Why a spoke cavity for the initial stage (2.5 – 10 MeV)?

- Quarter wave cavity is complicated (problems with mechanical stability and field symmetry);

- Half-wave cavity has smaller R/Q.

Period of SSR0 section:

SSR0 cavity and solenoid with correctors and BPM (605 mm):

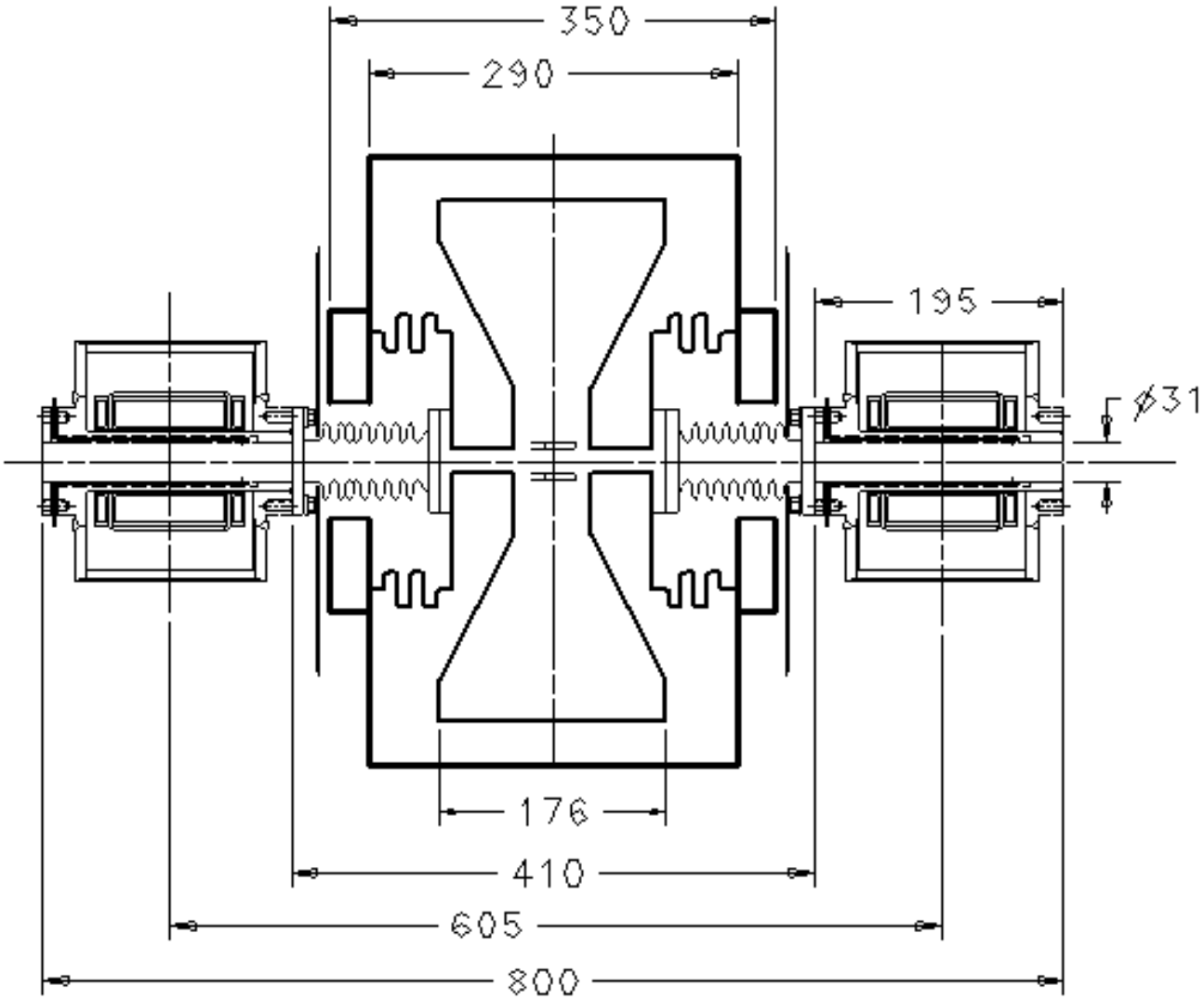

SSR1 cavity: the cavity prototype is tested.

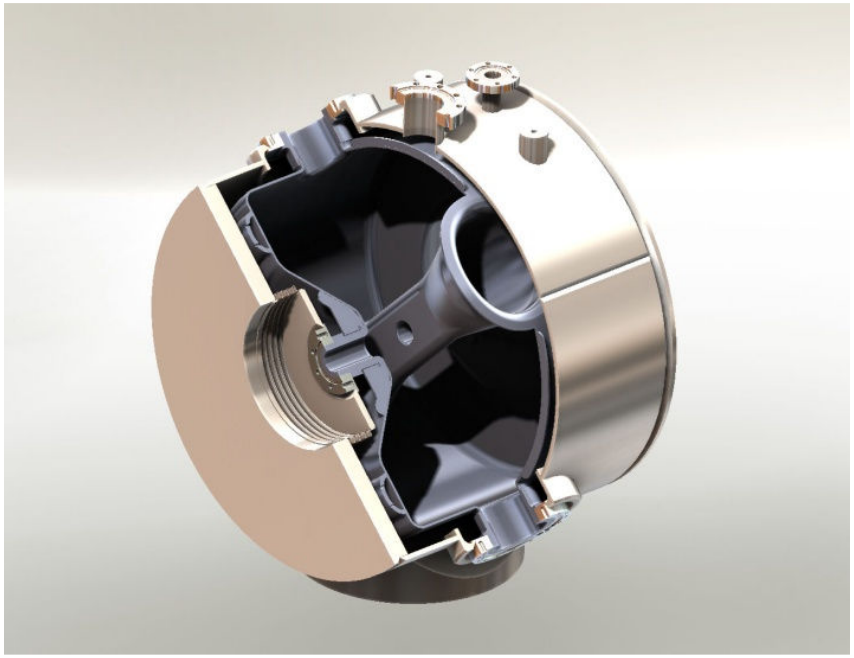

Operating frequency	325	MHz
β_G	0.22	
Cavity internal length (from wall to wall)	295.3	mm
Dressed cavity length	416	mm
Cavity internal diameter	490	mm
R/Q	242	Ω
G-factor	84	Ω
Max. gain per cavity (zero synch. phase)	1.53	MeV
Maximal surface electric field	34.4	MV/m
Maximal surface magnetic field	50.8	mT

Period of SSR1 section:

SSR1 cavity and solenoid without BPMs: 750-800mm.

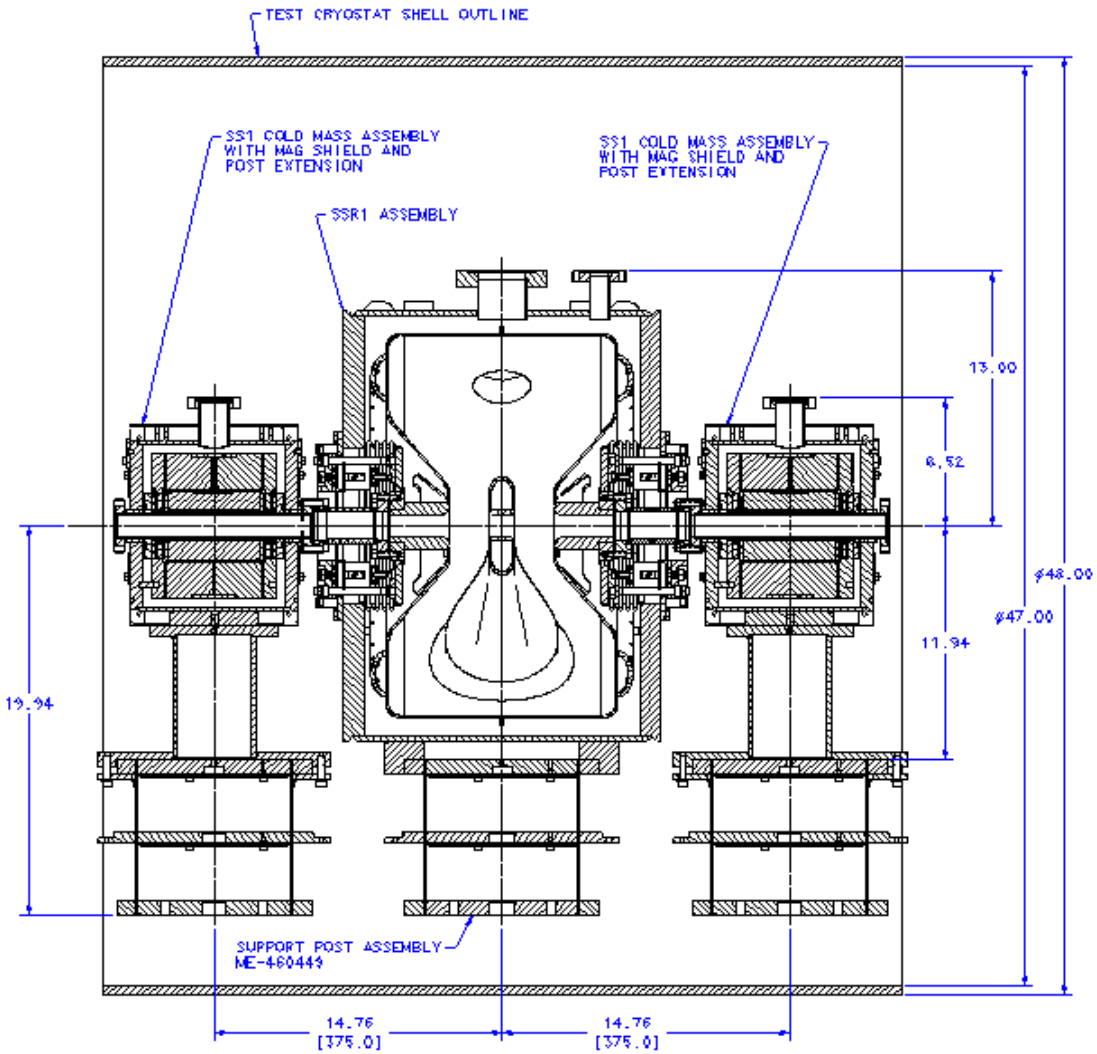

SSR2 cavity design is to be completed.

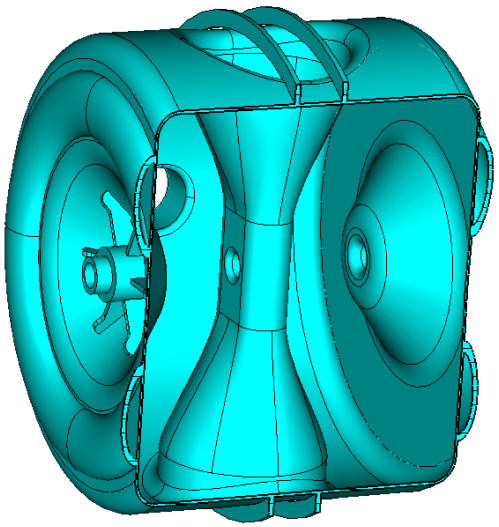

Operating frequency	325	MHz
β_G	0.4	
Cavity internal length (from wall to wall)	406	mm
Dressed cavity length	~530	mm
Cavity internal diameter	556.2	mm
R/Q	322	Ω
G-factor	112	Ω
Max. gain per cavity (zero synch. phase)	3.16	MeV
Maximal surface electric field	33	MV/m
Maximal surface magnetic field	54	mT

650 MHz – low beta

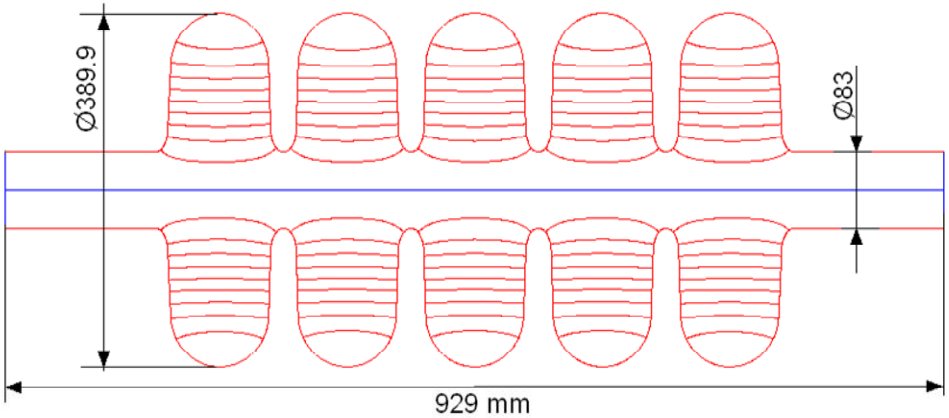

Operating frequency	650	MHz
β_G	0.61	
Cavity length (from iris to iris)	705	mm
Cavity internal diameter	389.9	mm
R/Q	378	Ω
G-factor	191	Ω
Max. gain per cavity (zero synch. phase)	12.0	MeV
Gradient	17.1	MeV/m
Maximal surface electric field	38.6	MV/m
Maximal surface magnetic field	72	mT

650 MHz, beta=0.61, 5 –cell cavity geometry:

Left cell

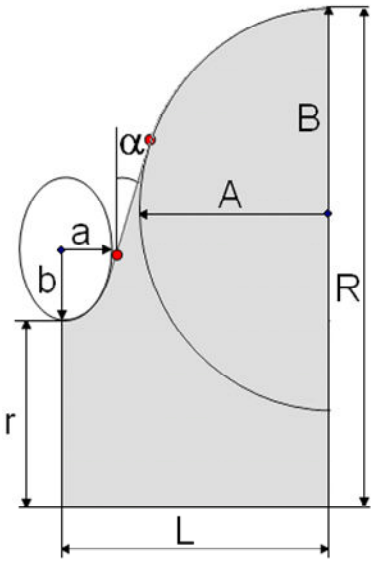

r	41.5
R	194.95
L	70.34
A	54
B	58
a	14
b	25
α	2°

Regular cell

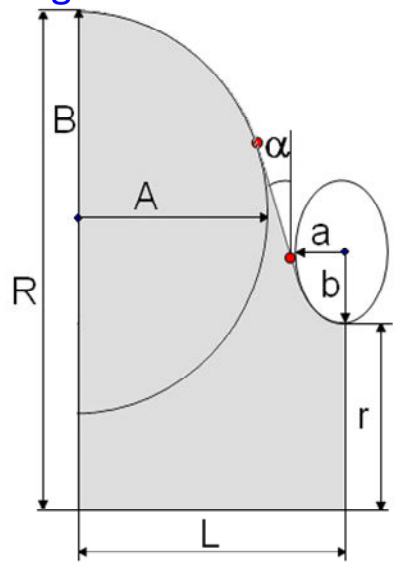

r	41.5
R	194.95
L	70.38
A	54
B	58
a	14
b	25
α	2°

Right cell

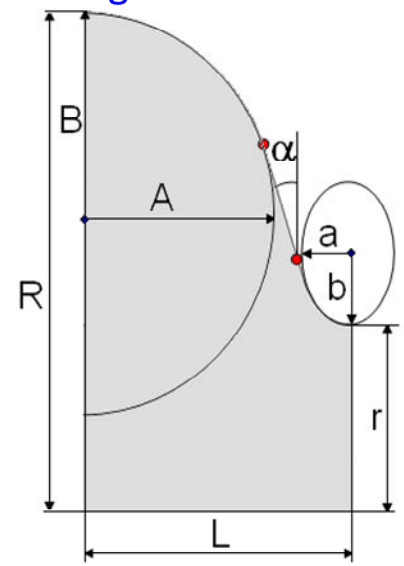

r	41.5
R	194.95
L	70.34
A	54
B	58
a	14
b	25
α	2°

All dimensions are in mm.

Should we increase the slope up to 5deg?

650 MHz – high beta

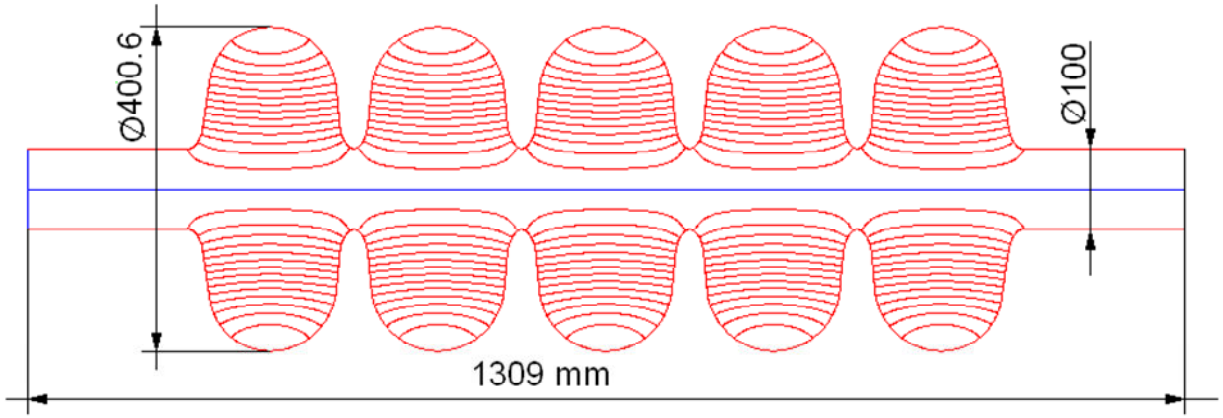

Operating frequency	650	MHz
β_G	0.9	
Cavity length (from iris to iris)	1038	mm
Cavity diameter	400.6	mm
R/Q	638	Ω
G-factor	255	Ω
Max. gain per cavity (zero synch. phase)	19.9	MeV
Gradient	19.2	MeV/m
Maximal surface electric field	38.4	MV/m
Maximal surface magnetic field	72	mT

650 MHz, beta=0.9, 5 –cell cavity geometry:

Left cell

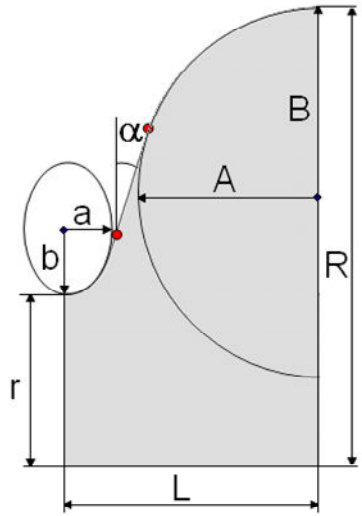

r	50
R	200.3
L	100.14
A	75
B	75
a	18
b	38
α	8.4°

Regular cell

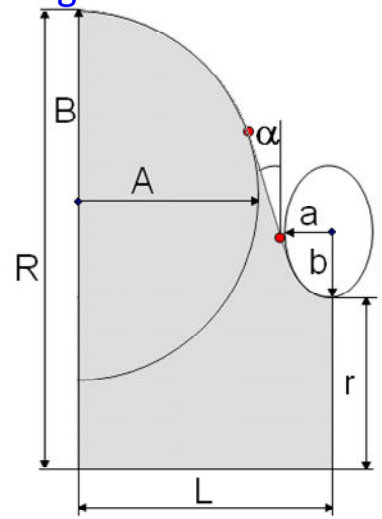

r	50
R	200.3
L	103.75
A	82.5
B	84
a	18
b	38
α	5.2°

Right cell

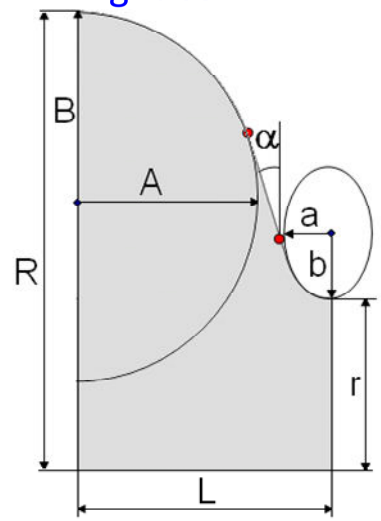

r	50
R	200.3
L	100.14
A	75
B	75
a	18
b	38
α	8.4°

All dimensions are in mm.

May we decrease the slope to 2-3 deg, as in LL structure?

Single –cell cavity tests:

Low-β single-cell cavity with the shape, corresponding mid-cell geometry

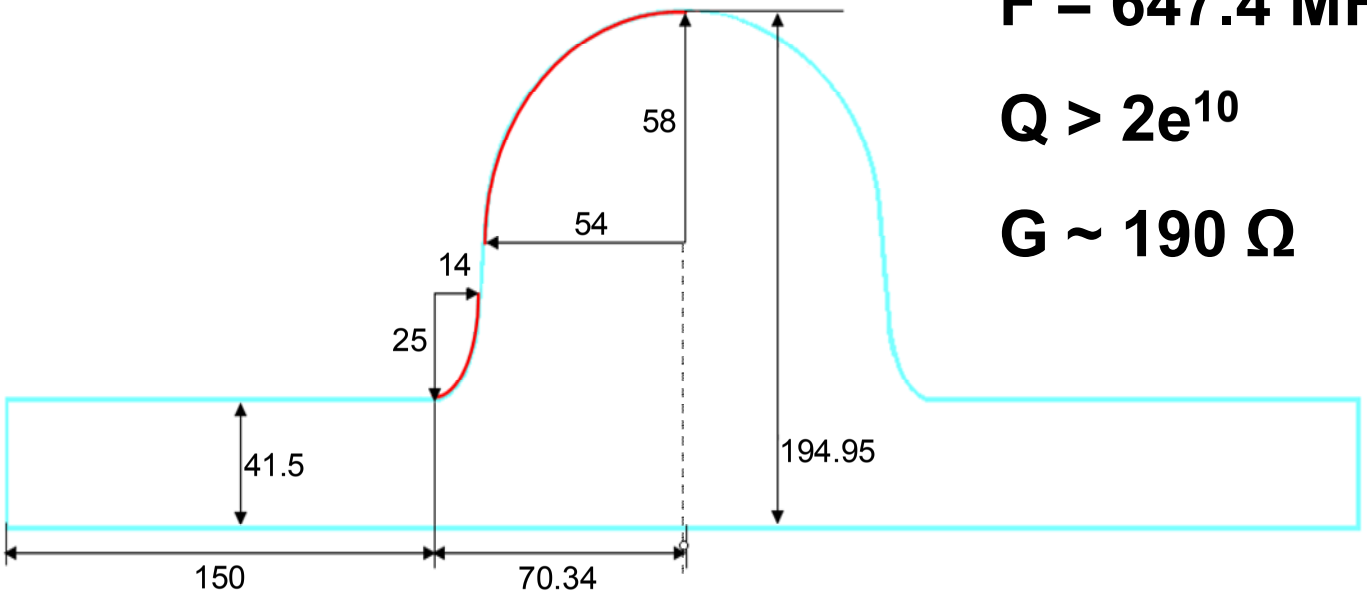

F = 647.4 MHz

Q > 2e^{10}

G ~ 190 Ω

Main dimensions (in mm) of single cell β=0.61 650 MHz test cavity.

High-β single-cell cavity with the shape, corresponding mid-cell geometry

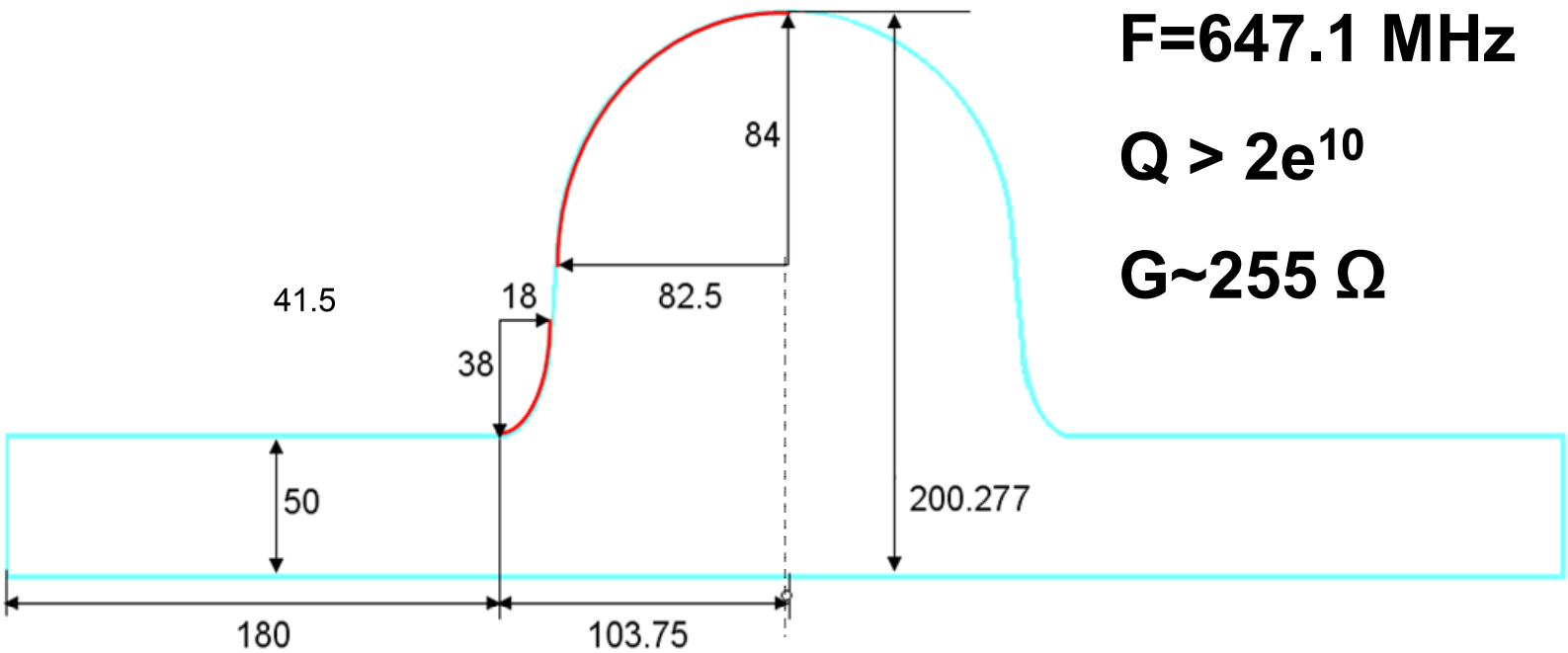

F=647.1 MHz

Q > 2e^{10}

G~255 Ω

Main dimensions (in mm) of single cell β=0.9 650 MHz test cavity.

Components necessary for option #4:

- Couplers: three types should be developed.

	Frequency	Power			
SSR0	325 MHz,	0.5	kW + 25% overhead =	0.63 kW	
SSR1	325 MHz,	1.5	kW + 25% overhead =	1.9 kW	5 kW
SSR2	325 MHz,	3.2	kW + 25% overhead =	4.0 kW	
Low beta	650 MHz,	11.5	kW + 25% overhead =	14 kW	
Mid beta	650 MHz,	18.5	kW + 25% overhead =	23 kW	25 kW
High – beta	1.3 GHz,	16.0	kW + 25% overhead =	20 kW	25 kW

- HOM couplers: two types may be necessary (or not?).

	Frequency	Q_{ext} **(to be clarified)**
SSR0	325 MHz,	<1.e7-1.e8
SSR1	325 MHz,	<1.e7-1.e8
SSR2	325 MHz,	<1.e7-1.e8
Low beta	650 MHz,	<1.e7-1.e8
Mid beta	650 MHz,	<1.e7-1.e8
High – beta	1.3 GHz,	<1.e7-1.e8 already exists and provides <1.e6

- Tuners (to compensate microphonics):

	Freq, MHz	Q_{load}	Bandwidth, Hz	
SSR0	325	6.5e6	45	Piezo-tuner
SSR1	325	6.5e6	45	
SSR2	325	1.0e7	27	
Low beta	650	3.3e7	20	Piezo-tuner
Mid beta	650	3.4e7	19	(CERN –type?)
High – beta	1300	1.7e7	76	Piezo-tuner (already exists)

- All the cavities –
  - SSR0;
  - SSR1 (prototype exists);
  - SSR2;
  - 650 MHz low beta and
  - 650 MHz high beta.
- Couplers (high average power);
- Tuners (including microphonic compensation system);

- Focusing elements (solenoids and quads) and
- CMs (period optimization, segmentation, alignment, microphonics, etc)

are to be designed, fabricated and tested.