Argonne NATIONAL LABORATORY

... for a brighter future

Design concepts for a pulsed multi-GeV H^- LINAC

Peter N. Ostroumov

Physics Division

U.S. Department of Energy

UChicago Argonne LLC

Office of Science
U.S. DEPARTMENT OF ENERGY

A U.S. Department of Energy laboratory managed by UChicago Argonne, LLC

Content

- Main specifications for the Linac
- Basic concepts for the Linac design
  - High energy section, ILC based, 1300 MHz
  - Front end up to 420 MeV
  - RFQ and MEBT
- Linac structure and base technology
  - Power fan-out to multiple cavities
  - SC accelerating structures above 10 MeV
- Choice of lattice parameters
- Beam dynamics

Main Linac Specifications

- Provide 8-GeV $1.56 \cdot 10^{14}$ protons per cycle in the MI
- Beam time structure
  - Extraction kicker -0.7 msec
  - Fit into MI 52.8 MHz rf structure without losses
- Repetition rate & pulse length
  - Initial configuration: 2.5 Hz at 3 msec, 0.5 MW at 8 GeV
  - ***Ultimate configuration: 10 Hz, 1 msec, 2 MW at 8 GeV***
  - ***Possible upgrades to higher power and peak current***
- This results to
  - Peak current for beam dynamics design is 40 mA
  - Average current over the pulse is 25 mA
  - Fast chopper in the MEBT (rise/fall time $\leq$ 2 nsec)

Linac conceptual design

- Use ILC cavities/cryomodules in the high-energy section
  - 45 cryomodules were supposed to be available
- RF power fan-out from one klystron to multiple cavities
  - TTF/ILC
- Two-frequency Linac option is proposed to produce multi-GeV H^-/proton beams:
  - 1300 MHz ILC cavities above ~1.25 GeV
  - Develop and use reduced-β ILC cavities (β=0.81) in the energy range ~420 MeV-1.25 GeV
  - Spoke loaded SC cavities in the Front End
- Front End: 325 MHz or 1300/3=433.3 MHz
  - Klystrons are available from TOSHIBA (J-PARC type) at 325 MHz

Front End, 325 MHz up to 420 MeV

- Obviously can be built as a normal conducting linac
  - J-PARC example
  - Cost is high
- We have proposed SC option
  - Cryoplant will be available anyway
  - Use RF power fan-out as in the high-energy section
- Use spoke-loaded cavities, developed to operate at ~350 MHz
- Transition energy from NC to SC has to be defined
  - SC is not cost effective for very low energies in pulsed linacs
- In the high-current linac:
  - Transition from RFQ to Drift Tube Structure requires ramping of accelerating gradient, SC cavities can not be used efficiently
  - RFQ provides very low accelerating gradients

Linac Structure

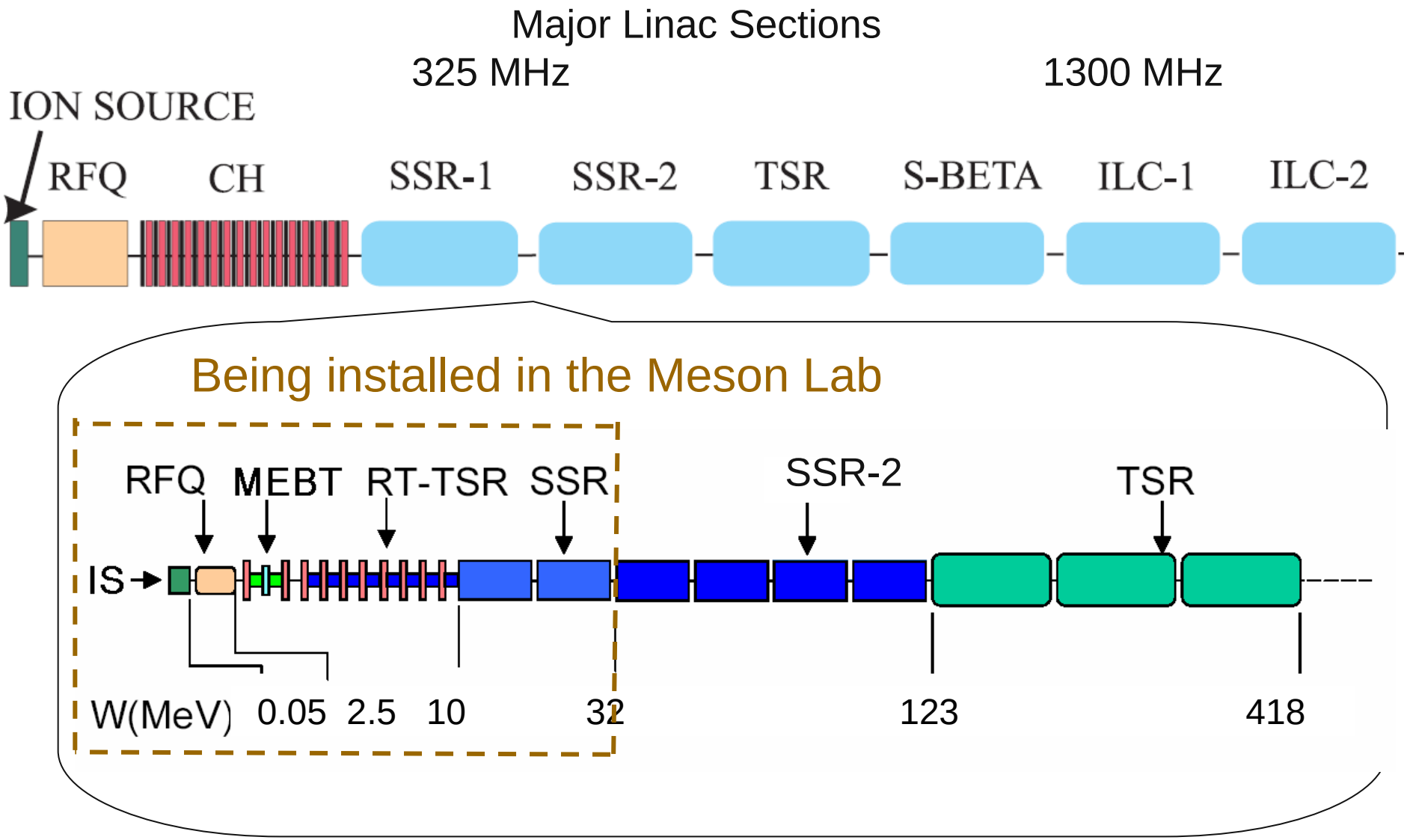

Accelerating cavities (not to scale)

NC spoke

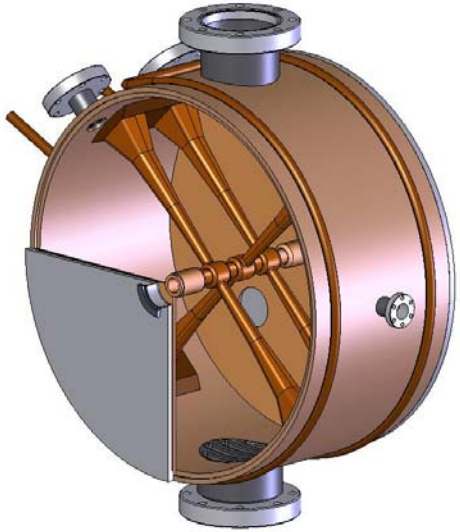

SC single spoke

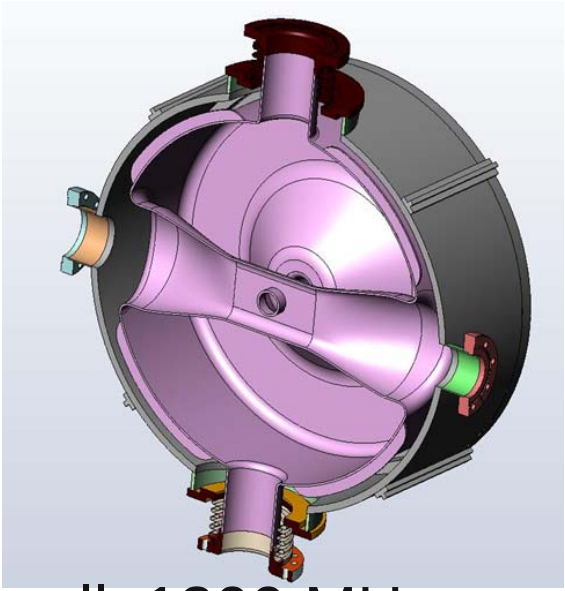

Triple-spoke cavity

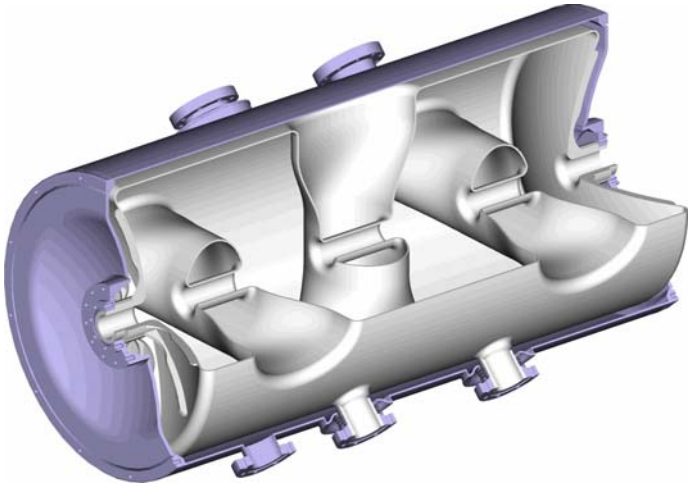

β_G=0.81, 7-cell, 1300 MHz

ILC, 9-cell

10 MeV section, 325 MHz

- Once RF power fan-out is available, NC CH-type cavities can be used
  - Very high shunt impedance (π-mode)
  - Aperture diameter is 18 mm. Small beam diameter thanks to the solenoid focusing
  - Total RF peak power consumption is ~348 kW for 16 cavities

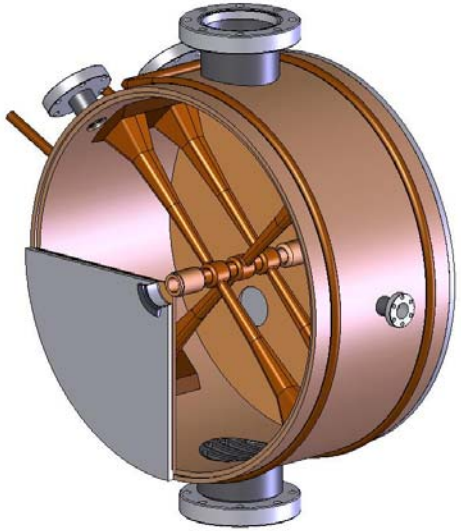

Radio Frequency Quadrupole

- Basic features:
  - Produce axially-symmetric beam
  - Small longitudinal emittance
  - No transverse emittance growth
  - Current limit is 140 mA
  - Field stabilization is by “fingers” on the end-plates

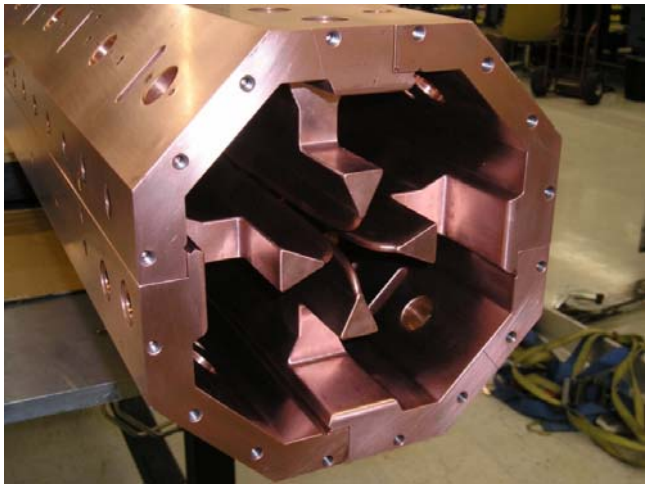

Average radius R_0, cm	0.340
Inter-vane voltage U_0, kV	90.45
Vane length, cm	302.428
Peak surface field, kV/cm	330
Output energy, MeV/u	2.498
Transverse emittance, rms, in/out, π mm mrad	0.10/0.10
Transverse emittance, 99.5%, in/out, π mm mrad	0.14/0.17
Long. emittance, rms, keV/u deg	133
Long. emittance, 99.5%, keV/u deg	1870
Transmission efficiency, %	97.8
Acceleration efficiency, %	95.9

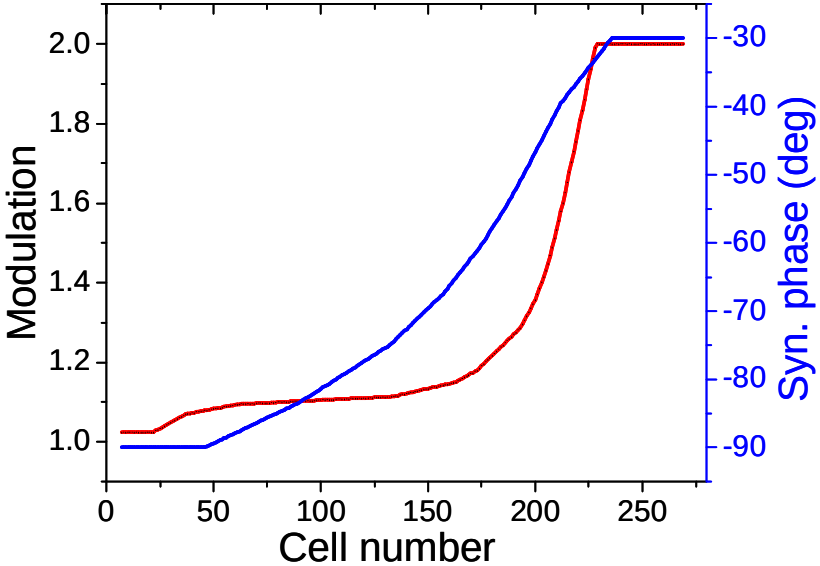

RFQ vanes

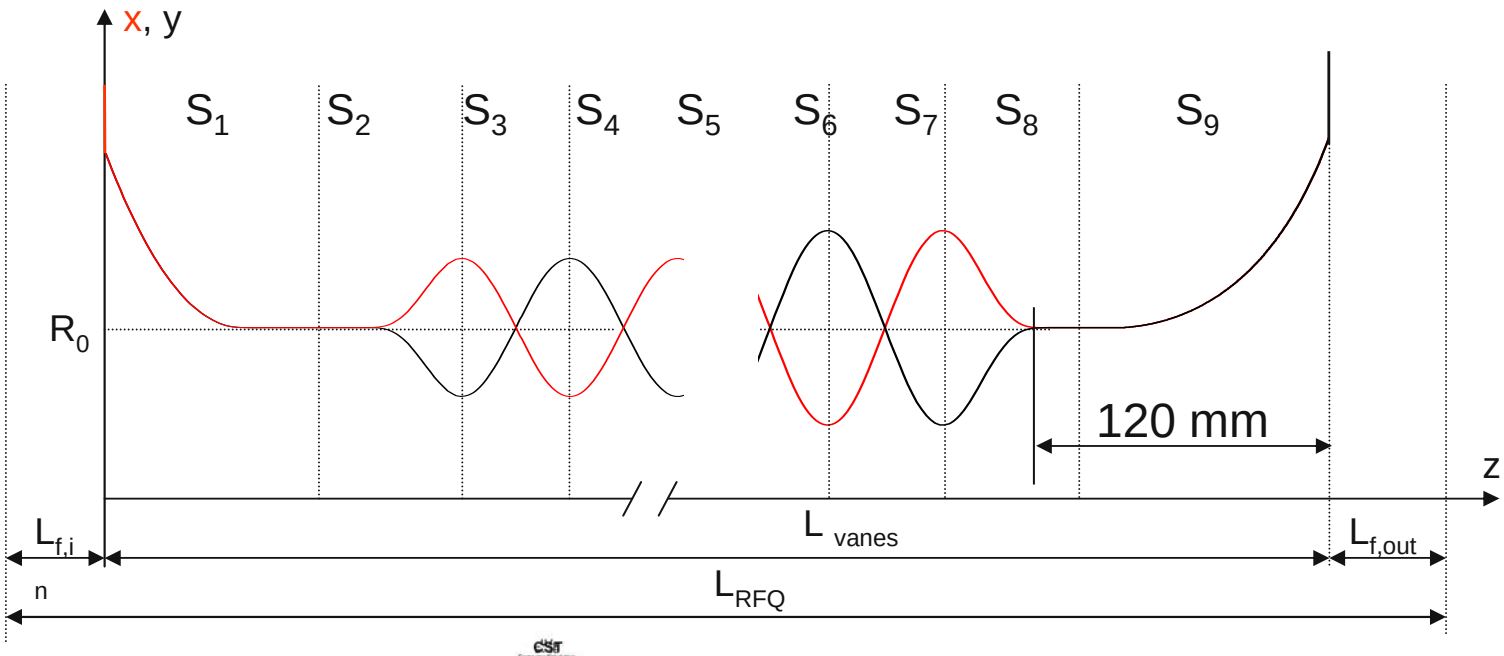
x, y
S1
S2
S3
S4
S5
S6
S7
S8
S9
R0
120 mm
z
Lf,i
L vanes
Lf,out
n
LRFQ

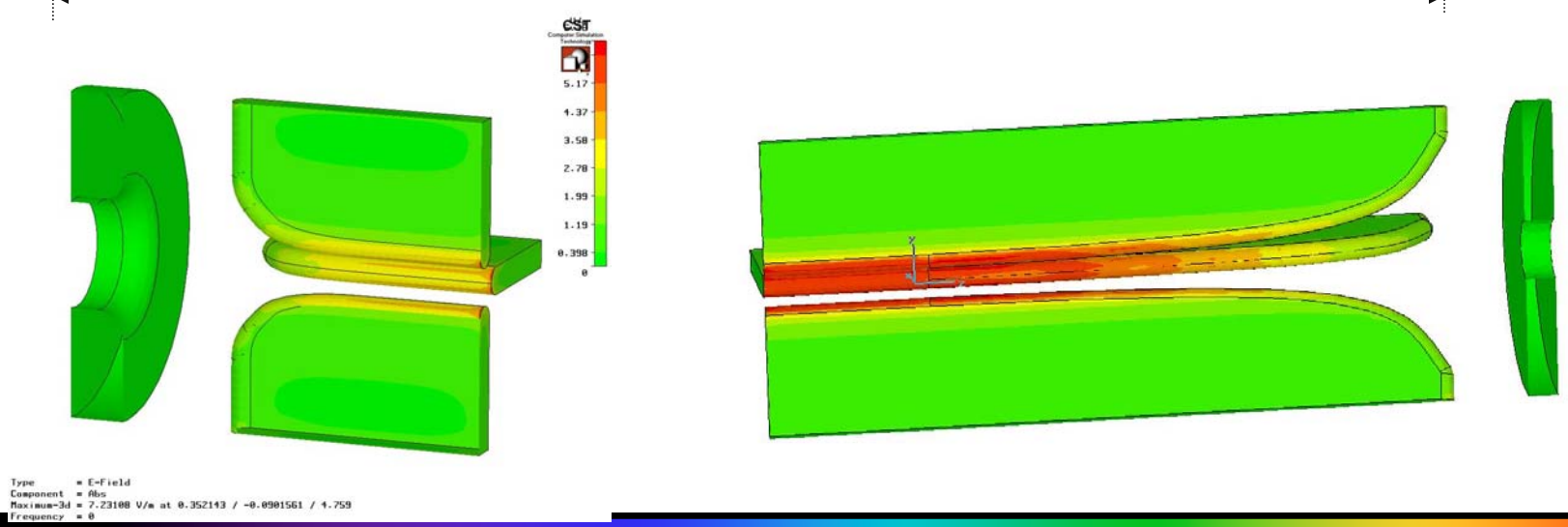
CST
5.17
4.37
3.58
2.78
1.99
1.19
0.398
0
Type = E-Field
Component = Abs
Maximum-3d = 7.23108 V/m at 0.352143 / -0.0901561 / 4.759
Frequency = 0

Beam envelopes along the RFQ

- Strong focusing: avoid large spread of $\Delta\sigma$
- Acceptance of the RFQ is smaller than the acceptance of the following linac

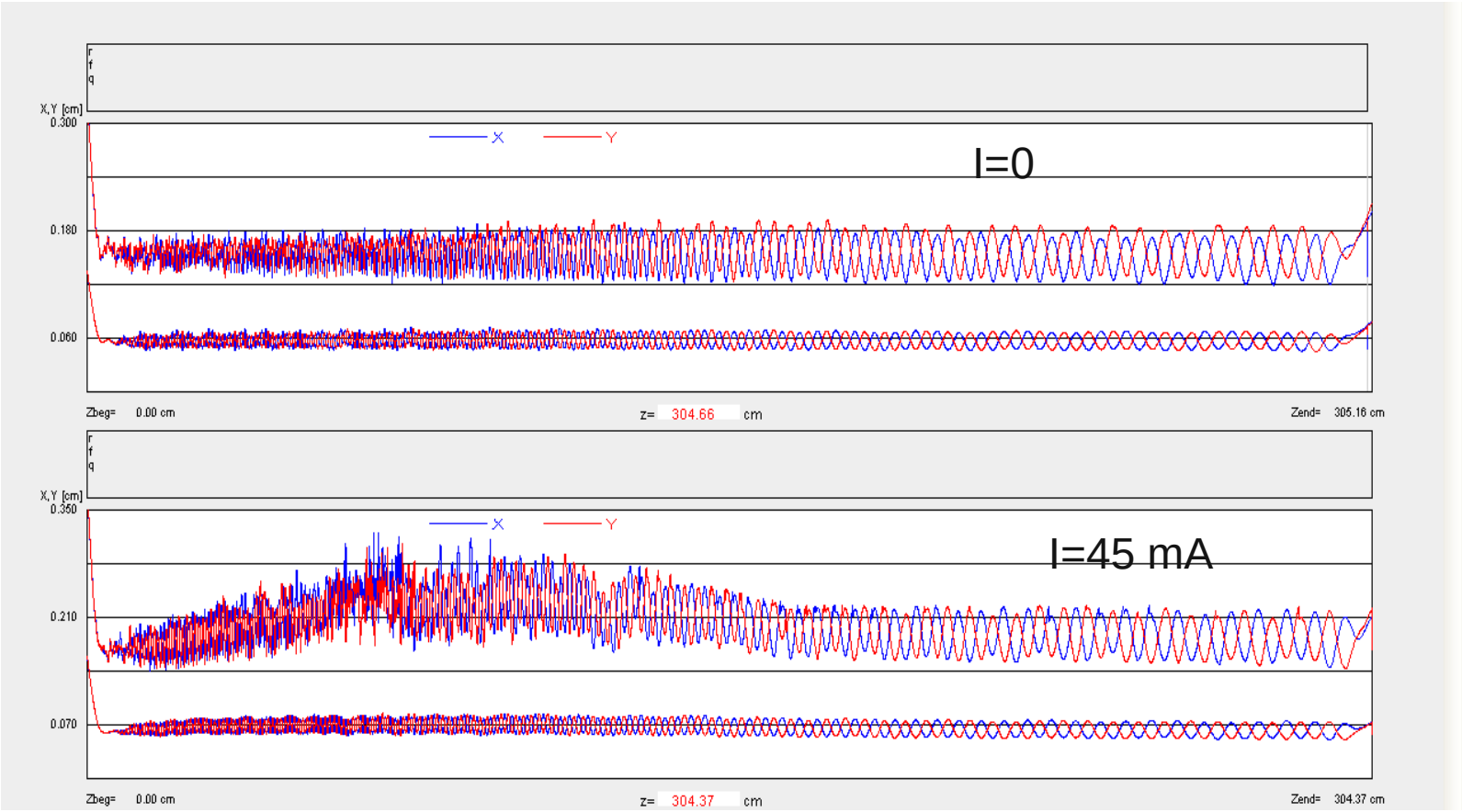

RFQ Beam Parameters (2.5 MeV, 43 mA)

Image of 100 million particles

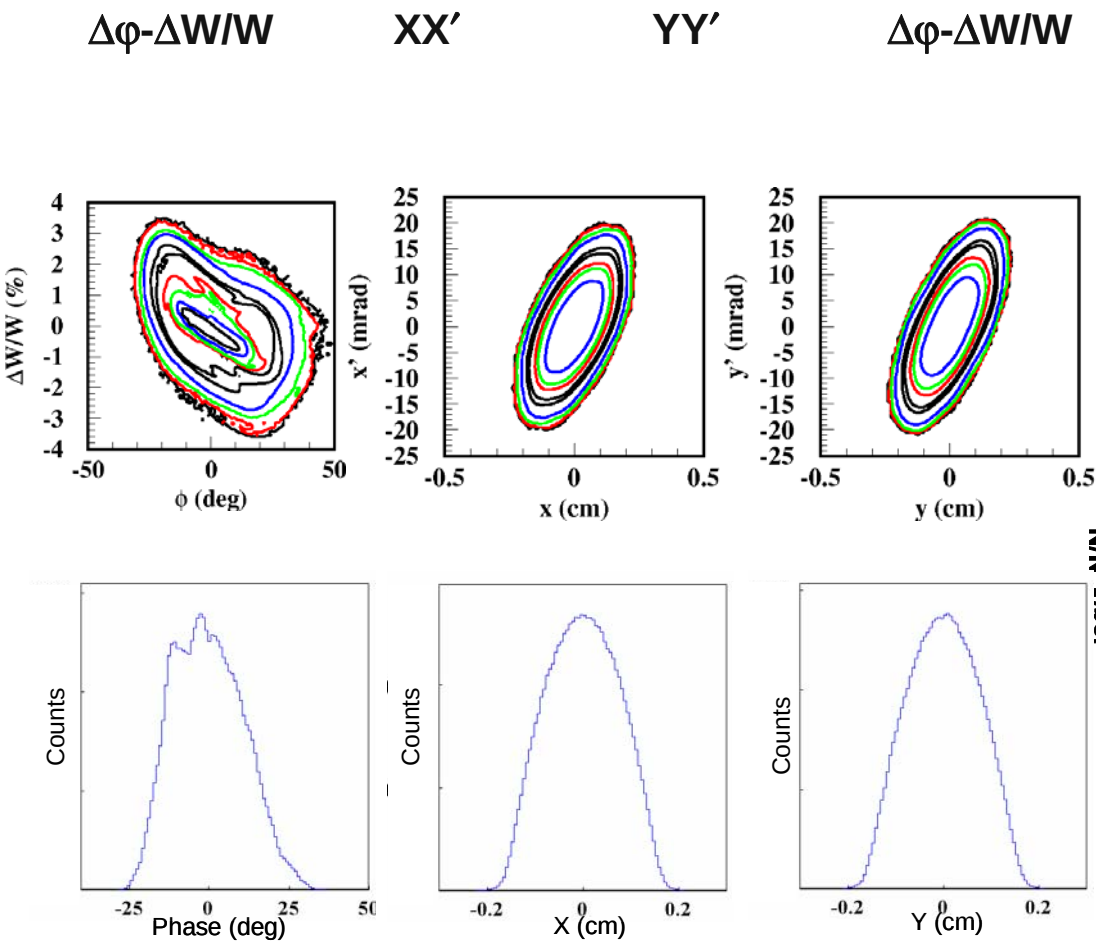

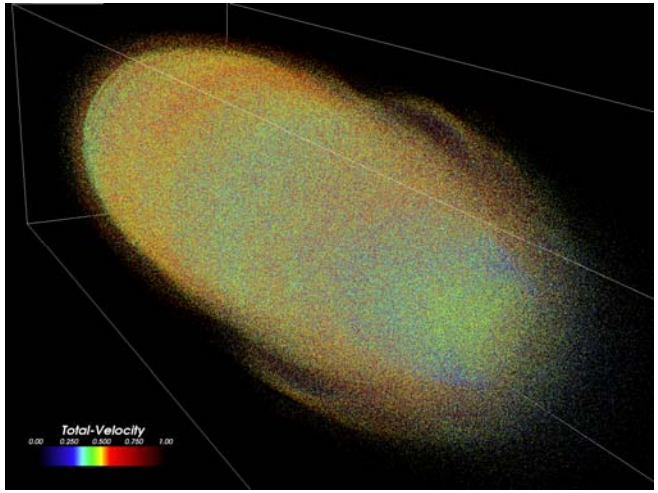

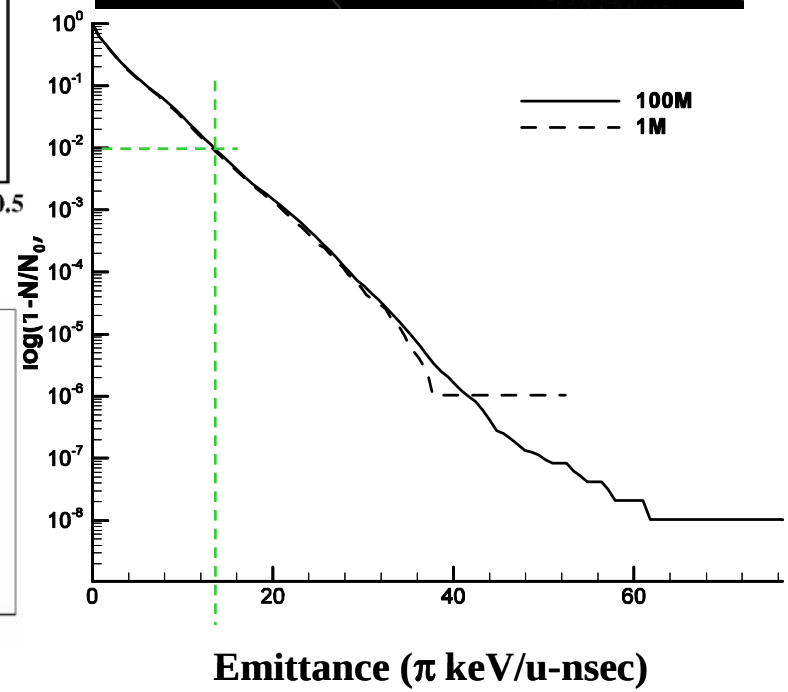

High intensity beam physics

- The zero-current phase advances of transverse and longitudinal oscillations should be kept below 90° per focusing period to avoid instabilities at high current.
- The wavenumbers of transverse and longitudinal particle oscillations must change adiabatically along the linac. This feature minimizes the potential for mismatches and helps to assure a current-independent lattice.
- Avoid the n=1 parametric resonance (zero current) between the transverse and longitudinal motion ($\sigma_{T0}=n\sigma_{L0}/2$). The strongest resonance is for n=1 and can occur particularly in SC linacs due to the availability of high accelerating gradients and relatively long focusing periods.
- Avoid energy exchange between the transverse and longitudinal planes via space-charge resonances, either by providing beam equipartitioning or by avoiding instable areas in Hofmann's stability charts .
- Provide proper matching in the lattice transitions to avoid appreciable halo formation. In the perfect "current-independent" design, matching in the transitions is provided automatically if the beam emittance does not grow for higher currents.

Beam physics, cont'd

- To avoid halo formation, the tune depression due to the beam space charge should be above 0.5. The tune depression,

$$\sigma_T = \frac{\sigma_{T0}}{\sqrt{2}}$$

  is considered a boundary between the "emittance and space-charge dominated" beams.
- Stability for zero current beam, defocusing factor

$$\Delta_s = \frac{\pi}{2}\frac{1}{(\beta\gamma)^3}\frac{S_f^2}{\lambda}\frac{eE_m \sin\varphi_s}{m_0 c^2}$$

  should be below ~0.7.
- The length of the focusing period must be short, especially in the front end.
- Defocusing factor is less for lower frequencies for given E_m
- Beam matching between the cryostats: adjust parameters of outermost elements (solenoid fields, rf phase)
- In the frequency transition at ~420 MeV, the longitudinal matching is provided by 90° "bunch rotation" , or bunch compression
- Minimize halo formation

Examples of wavenumbers for zero current

- SNS

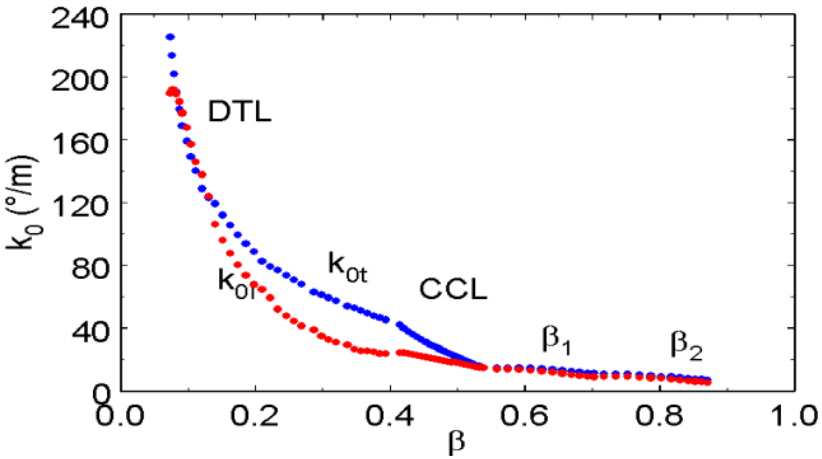

HINS

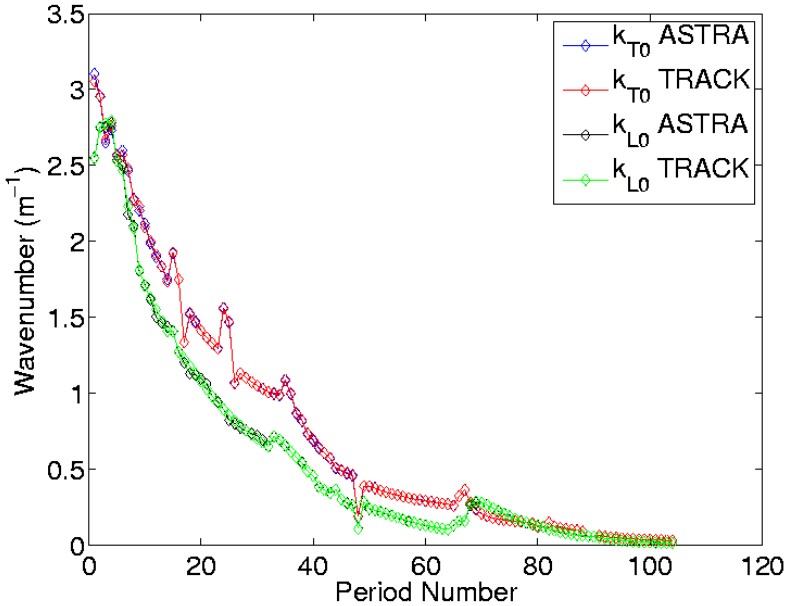

Apertures

- LANSCE experience
  - 1 MW beam power
  - aperture/rms=7
  - Hands-on maintenance
- In NC structures aperture has to be small to obtain higher shunt impedance
- Beam dynamics: beam halo development for high current beams (tune depressions <0.8). Source: beam mismatches, lattice transitions. Well collimated beam develops halo with amplitude/rms~12.
- For high power linacs: a/rms>12, especially in the high energy section >100 <MeV
- However, for proton beams below several hundred MeV: if particle is out of longitudinal stability area it will be lost independently of the aperture size

Focusing structure in the SC Linac

- In low energy section SC cavities can provide high accelerating gradients
  - CW linac: ~real estate ~5-8 MV/m
  - Pulsed: ~20 MV/m (real estate ~6-10 MV/m), (SNS = 2.0 MV/m)
- Real estate gradient is higher than in NC by factor of 3-5
  - To fully use available gradients, apply strong focusing
- Available options for the focusing structure
  - FODO

  - FDO

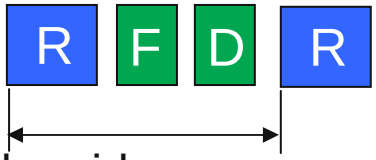

  - SC Solenoids

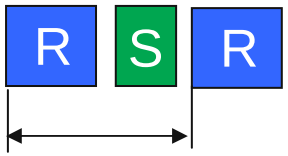

Beam size modulation is high
Long drift space for longitudinal dynamics

Focusing by SC solenoids

- Solenoids decrease the length of the focusing period S_f compared to FODO. Accelerating gradients can be higher.
- Other advantages of solenoids compared to typical FODO
  - Acceptance is large for the same phase advance σ.
  - Less sensitive to misalignments and errors. The most critical error – rotation about the longitudinal axis – does not exist
- Perfectly suitable for SC environment together with SRF
  - Beam quality is less sensitive to inter-cryostat transitions and mismatches
  - Easily re-tunable to adjust to the accelerating gradient variation from cavity to cavity. This is critical in low energy SC linac due to the beam space charge.
  - Can be supplemented with dipole coils for corrective steering
- MEBT: long drift space for chopper does not cause dramatic emittance growth for high current beams
- Long term experience at ATLAS (ANL).
  - Now operational at TRIUMF, SARAF, new projects: IFMIF
- Not suitable for H-minus above ~100 MeV due to stripping at solenoid edge field

Why SC solenoids in the HINS proton driver (or Project X) ?

- Cryogenics facility is available, major part of the linac is SC structures
- The Front End (up to 420 MeV) is based on SC cavities: 325 MHz SSR, TSR
  - Long cryostats house up to ~10 SC cavities and solenoids
- Can provide short focusing periods in the low energy region, 75 cm
- Axially-symmetric beam is less sensitive to space charge effects in the MEBT where the long drift space is necessary to accommodate the chopper and following beam dump
- Using SC solenoids in the NC section from 2.5 MeV to 10 MeV
  - Short section between axial-symmetric MEBT and cryostats with solenoid focusing
  - Small beam size, aperture of the cavities is 18 mm in diameter
  - Short focusing periods from 50 cm to 75 cm
- RFQ can provide axial-symmetric beam

Experience with SC solenoids at ATLAS and TRIUMF

- 9 Tesla, <100 A, current lead is ~$600.
  - Persistent switch
  - High-μ shielding
- Developed in 1976 and usually we purchase solenoids from AMI (originally for $5k/coil)
- After beam tuning is complete, the solenoids are switched to operate in persistent mode
- Cavities never quench, no impact of the stray magnetic field on SC cavities
- We have done RF conditioning of SC cavities and quenched cavities while solenoids were "on"
- TRIUMF has carefully studied solenoid alignment procedures and measured ~ ±200 μm

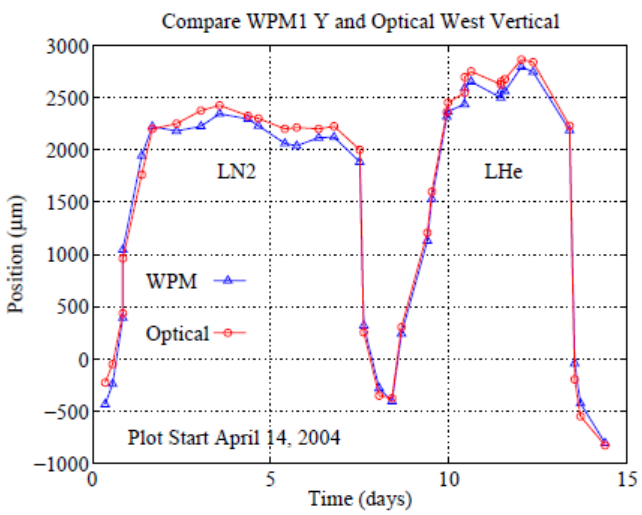

Cryomodule, SC solenoid and cavities

β_{OPT}=0.15

New cryomodule, under construction

- The most recent design from AMI ($26.5k): reduced stray field, no iron or high-μ shielding

β_{OPT}=0.077

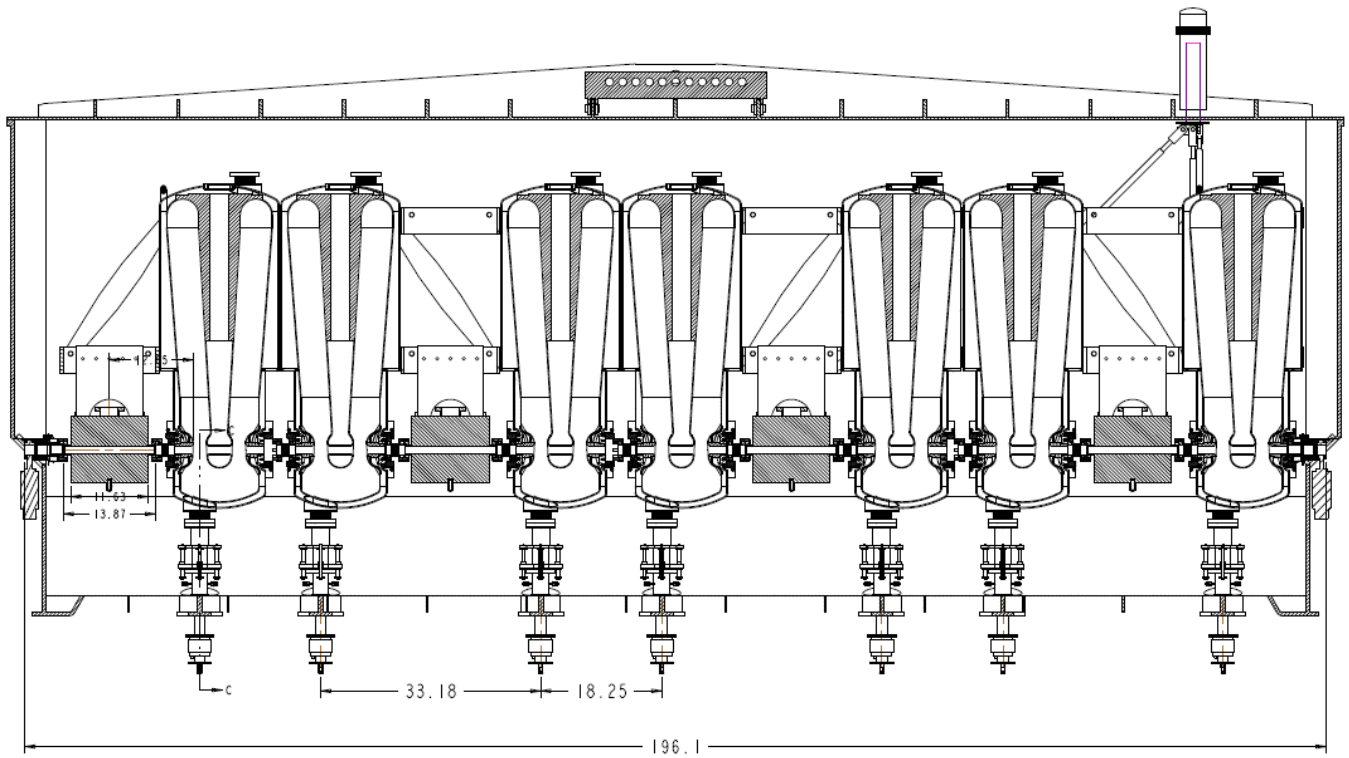

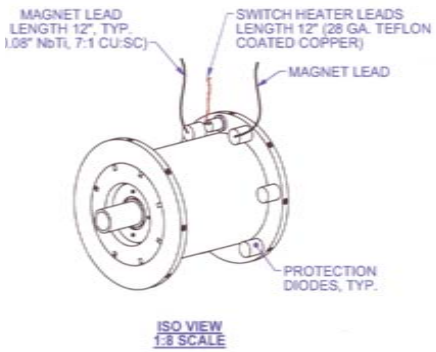

Cavity parameters and focusing lattice

Section	CH	SSR-1	SSR-2	TSR	S-ILC	ILC-1	ILC-2
β_G	-	0.2	0.4	0.6	0.83	1	
# of res.	16	18	33	42	56	63	224
# of cryost.	-	2	3	7	7	9	28
E_{peak} (MV/m)	-	30	28	30	52	52	
Focusing	SR	SR	SRR	FRDR	FR^2DR^2	FR^4DR^3	FR^8DR^8
L_F , m	0.515-0.75	0.75	1.6	3.81	6.1	12.2	24.4

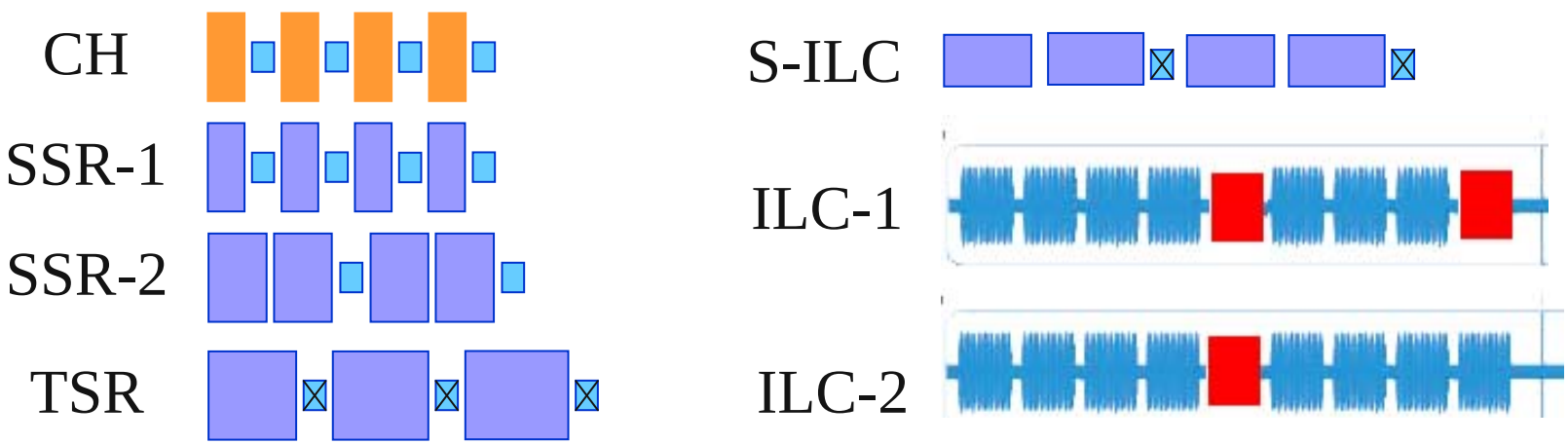

Focusing in TSR

- W > 120 MeV, beam is rigid
- Longer drift spaces and focusing periods are acceptable - FODO
- Longer quads, should be possible to align – requires cold tests

Voltage gain per cavity

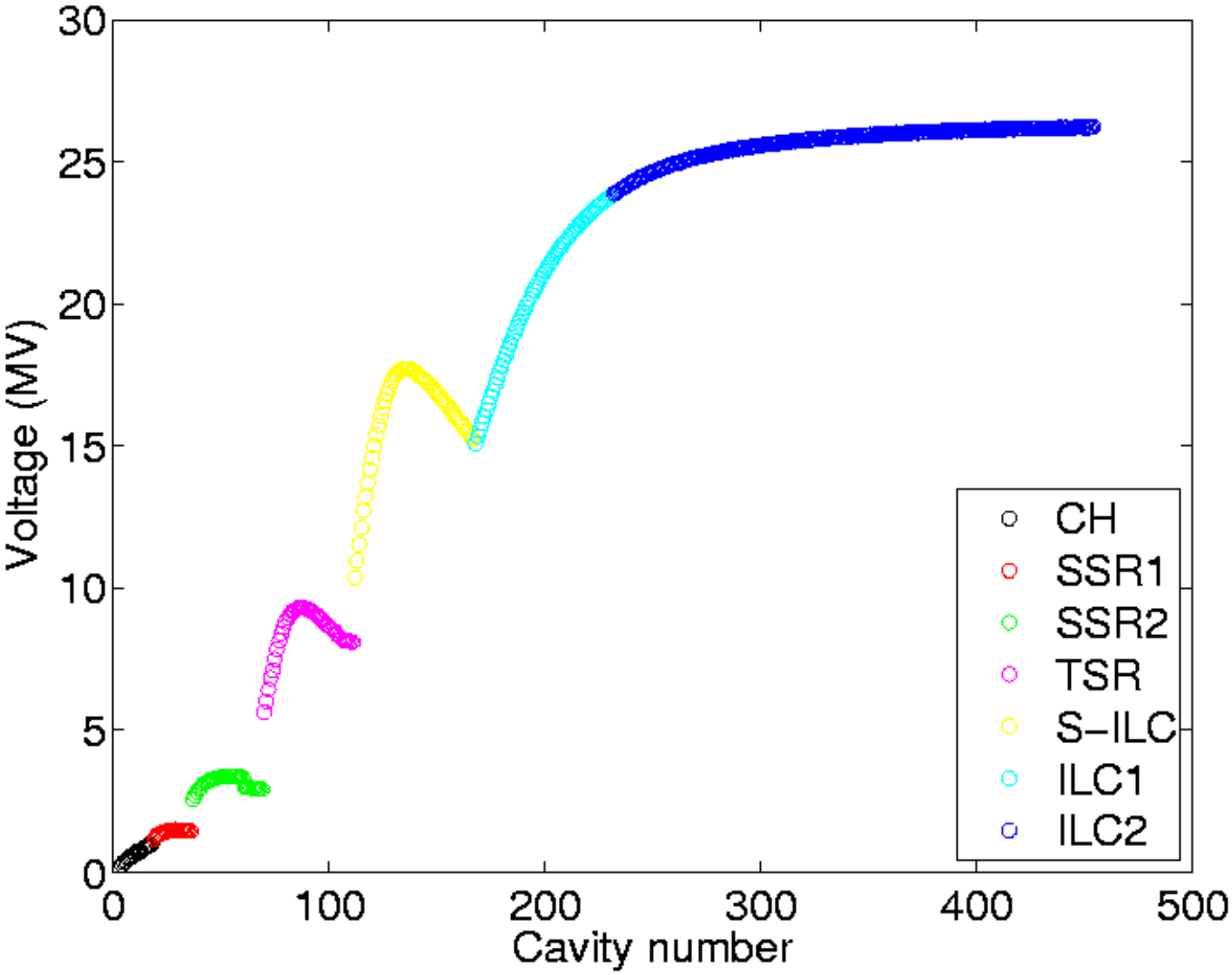

Properties of an ion SC linac, cost-effective design

- The acceleration is provided with several types of cavities designed for fixed beam velocity. For the same SC cavity voltage performance there is a significant variation of real-estate accelerating gradient as a function of the beam velocity.
- The length of the focusing period for a given type of cavity is fixed.
- There is a sharp change in the focusing period length in the transitions between the linac sections with different types of cavities
- The cavities and focusing elements are combined into relatively long cryostats with an inevitable drift space between them. There are several focusing periods within a cryostat.
- Apply an iterative procedure for the lattice design
  - Choice of parameters
  - Tune for “zero” beam current
  - Tune for design beam current
  - Multiparticle simulations
  - Iterate to improve beam quality and satisfy engineering requirements

HINS PD lattice, mitigation of the effect of the lattice transitions

- MEBT and NC section, short focusing periods, adiabatic change from 50 cm to 75 cm

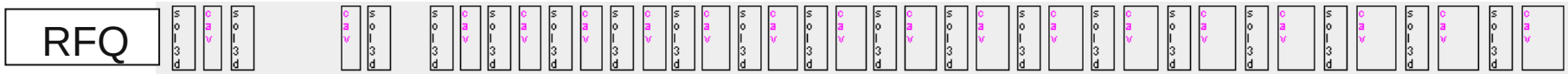

- 2 cryomodules of SSR-1: Minimize the inter-cryostat drift space

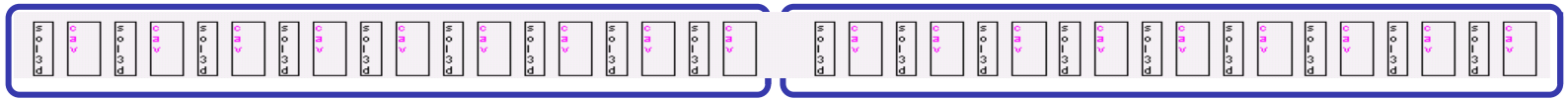

- 3 cryomodules of SSR-2: Provide a drift space by missing the cavity

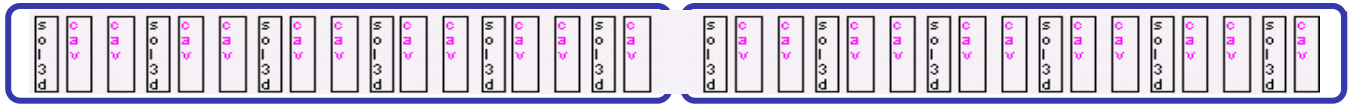

- TSR: Provide an extra drift space inside the cryostat

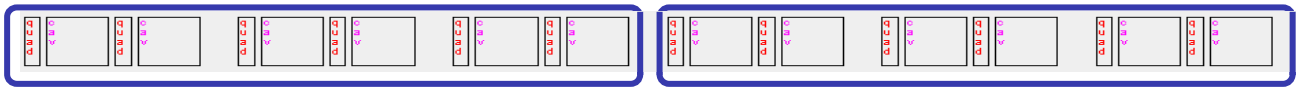

-

Beam Dynamics Simulations

- The major workhorse is TRACK
- "Zero-current" tune were created using TRACK routines in 3D-fields
- The tuned lattice was simulated with ASTRA for detailed comparison
- Tune depression with space charge:
  - rms beam dimensions are from TRACK or ASTRA

$$\gamma_s = \frac{\pi}{2}\frac{1}{(\beta\gamma)^3}\frac{L_f^2}{\lambda}\frac{eE_m \sin(\varphi_s)}{m_0 c^2}$$

Stability chart for zero current, betatron oscillations

o - TRACK × - ASTRA

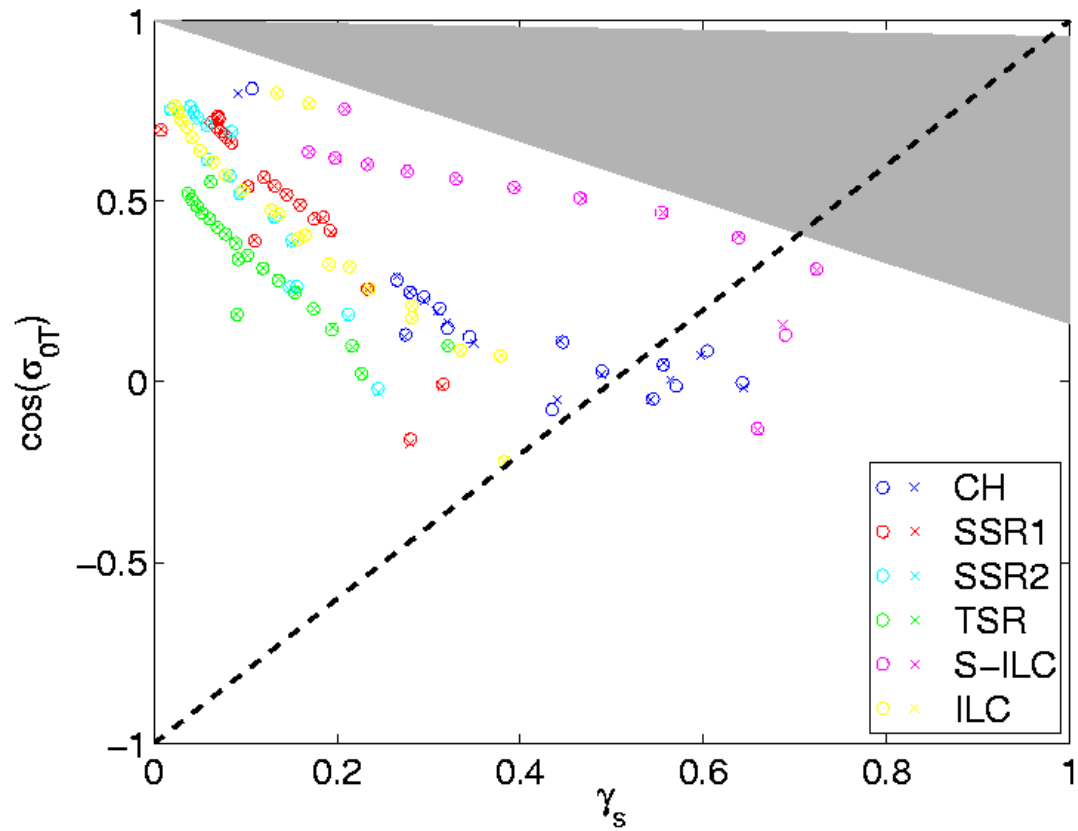

Variation of lattice parameters along the linac

- $\sigma_0<90°$
- k_{T0}, k_{L0} adiabatic despite of many lattice transitions with different types of focusing and inter-cryostat spaces, cavity TTF
- Beam matching in the lattice transitions is very important to avoid emittance growth and beam halo formation

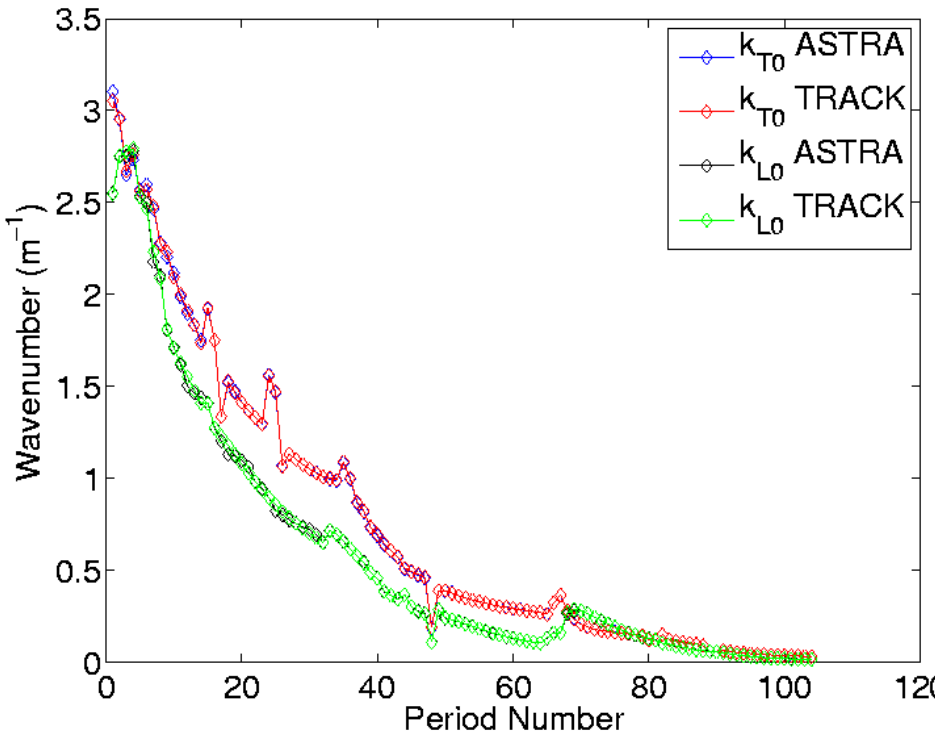

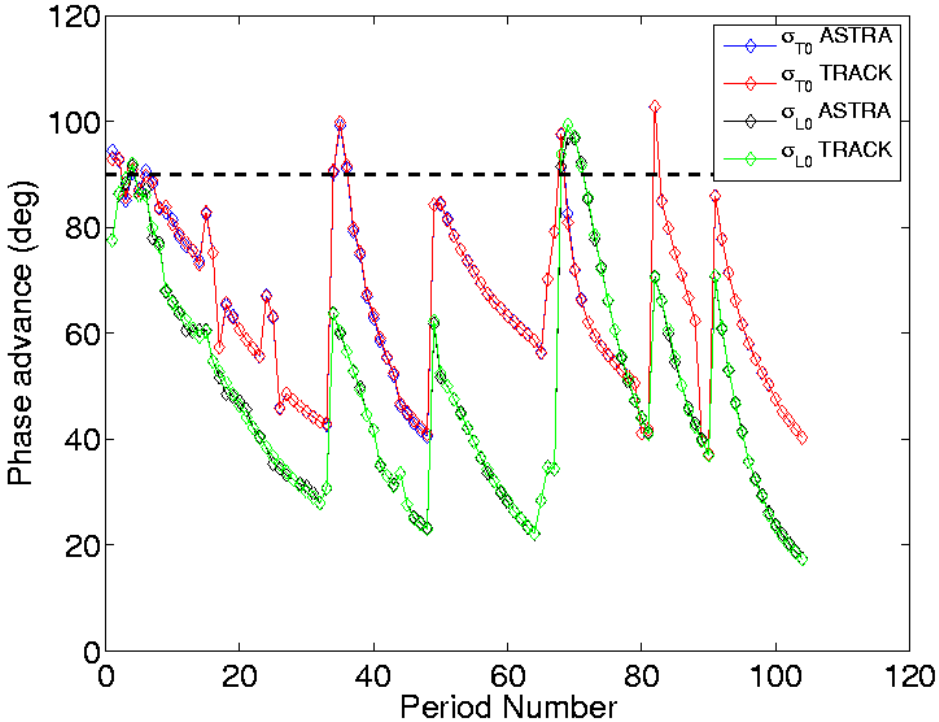

Hofmann's chart for the PD Front End

- Avoid strong space charge resonances (white area)
- Provide equipartitioning of betatron and synchrotron oscillation temperatures along the linac, primarily in the front end

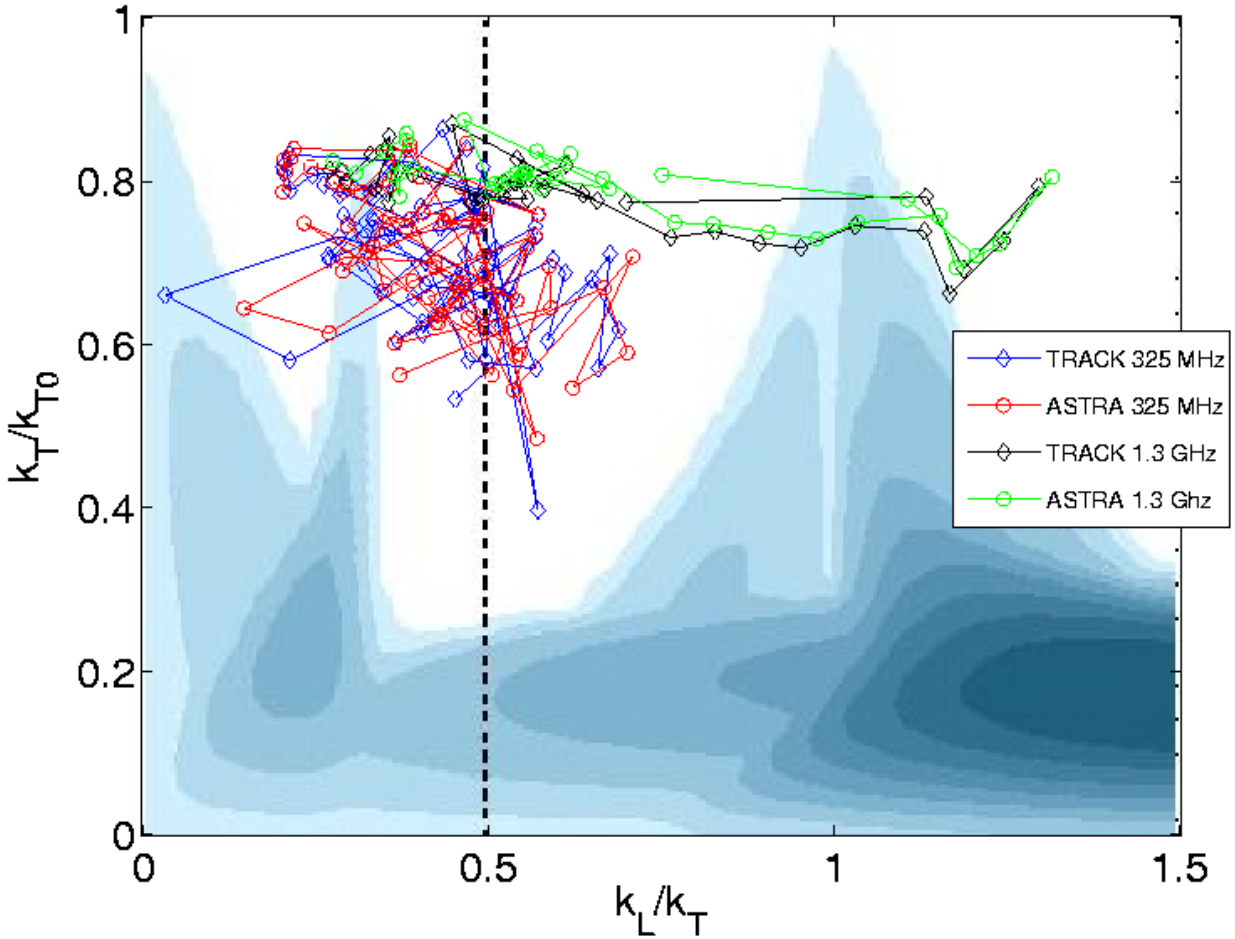

Beam envelopes, 45 mA RFQ entrance, 43.25 mA in the linac

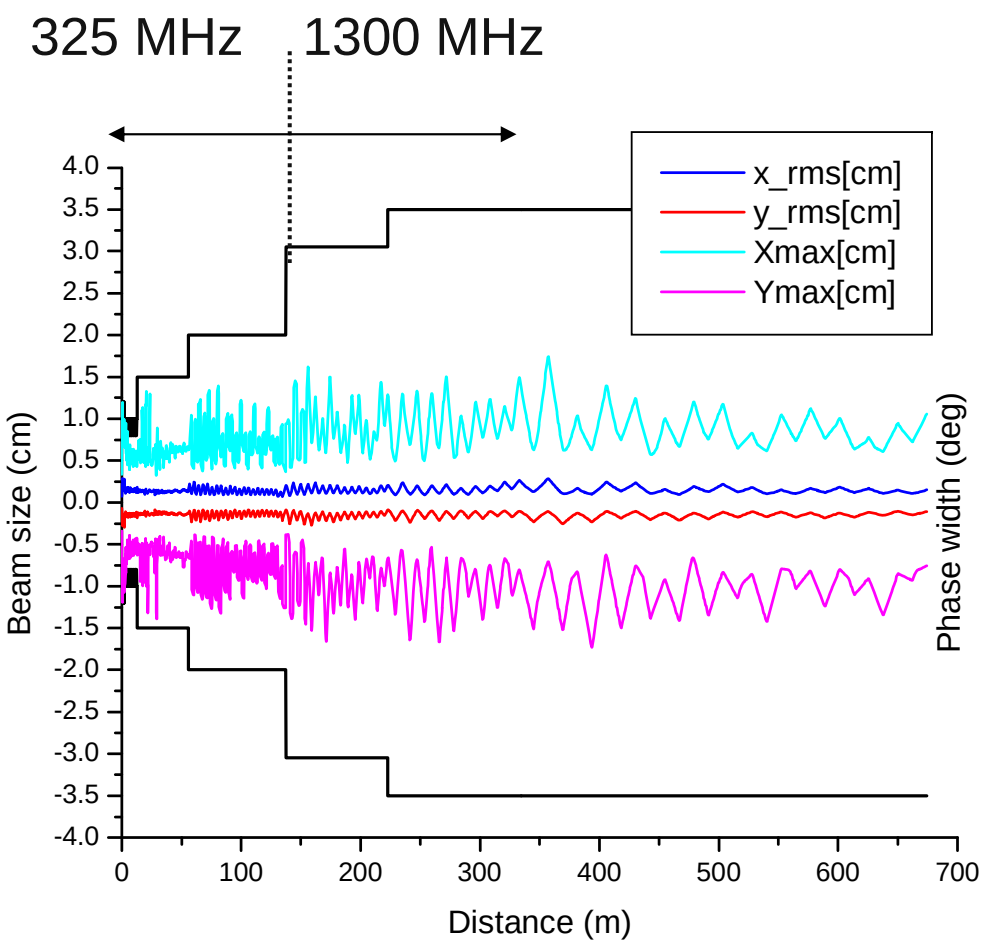

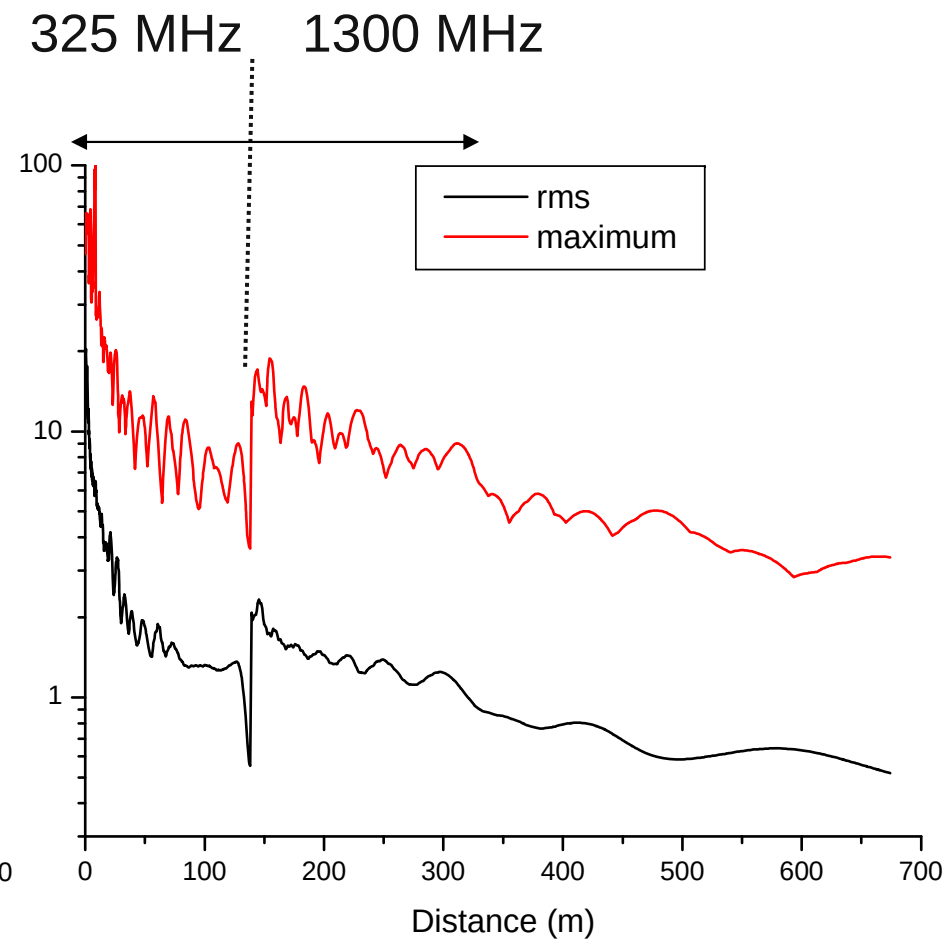

RMS emittance growth

- Main contribution from
  - MEBT, irregular lattice
  - Inter-cryostat drift space
    - *Beam diagnostics*
  - Lattice transition
    - *Increase of focusing length*
  - Long focusing periods in the S-ILC section
  - Beam matching is good but not perfect

- **Emittance growth is low and acceptable for the HINS PD**

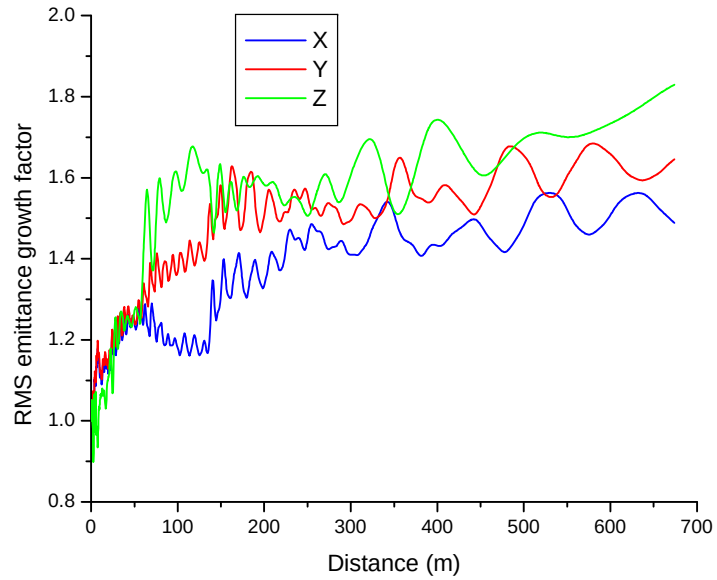

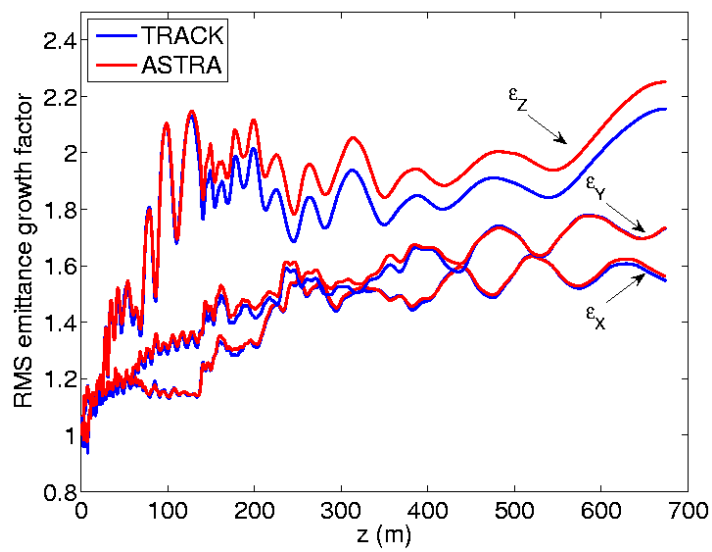

High statistics simulations for 8-GeV, 100 seeds with all errors

- Error simulations
  - Random, multiple seeds
  - For the static errors correction is applied in each seed
  - Dynamic errors are not corrected
- Type of errors
  - Misalignments
  - Dynamic errors of RF and focusing field

Envelopes

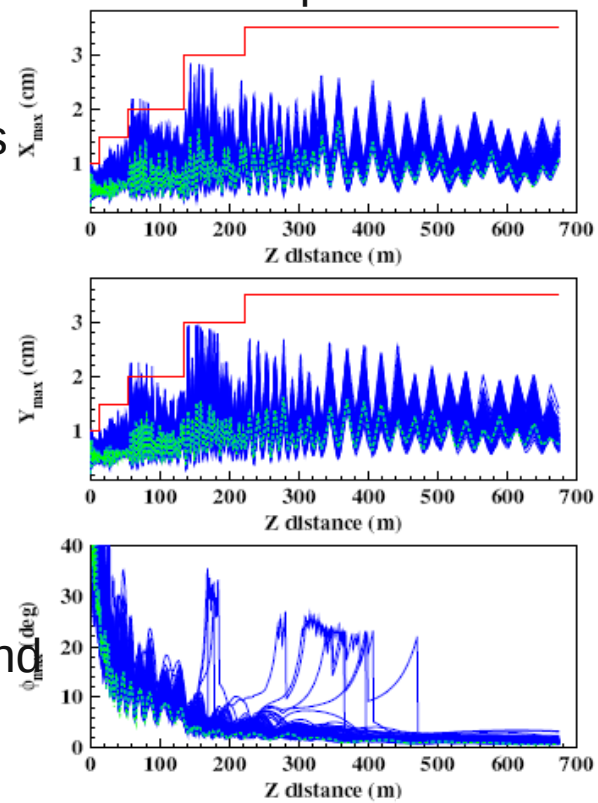

RMS emittances

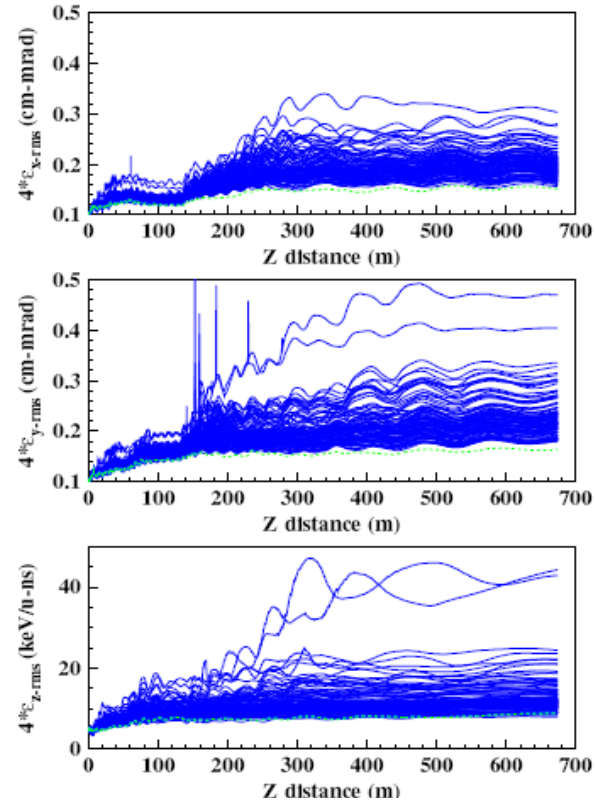

Misalignments: sol. - ±0.2mm, quads - 0.15mm

Quads rotation: ±5 mrad

Cavities: ±(0.5 -1.0) mm

RF errors:1 deg and 1%, rms

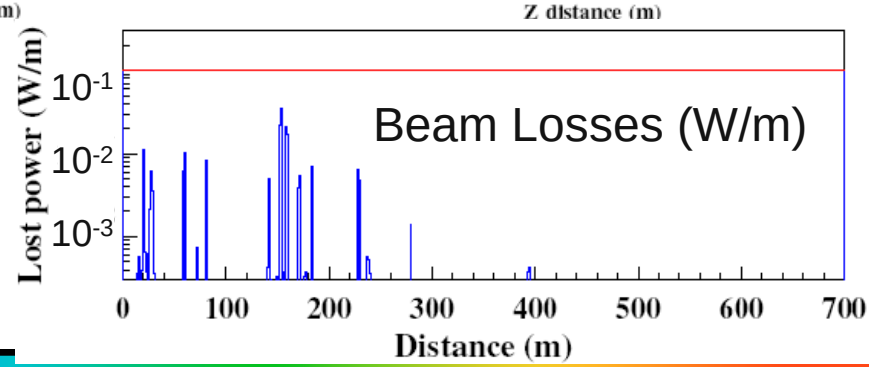

Conclusion

- Pulsed H-minus/proton linac design has been developed
  - All SC above 10 MeV
  - SC linac can provide good beam quality for peak current ~45 mA
- With the assumption that RF power fan-out is a practical approach, the SC linac is cost-efficient
- RFQ provides axial-symmetric beam
- Focusing of high-intensity beams with SC solenoids provides several advantages compared to quadrupole focusing
- Beam dynamics design of the linac is based on high-intensity beam physics approach
- High-statistics BD simulations with all machine errors and H-minus stripping show beam losses well below of <0.1 W/m for typical set of machine errors
-