Beam Preparation for X-Linac and Distribution after Acceleration

No Direct Solution Is Suggested.

Approach to Choosing a Design Concept Is Proposed

I. Terechkine, V. Yakovlev

Project X CW Linac Meeting
11/03/09

Content

1. Introduction: requirements and known proposals
2. Beam preparation: how and where Known approaches and problems
3. “Clean” LEBT concept
4. Based on “solid ground”, it is easier to apply some fantasy
5. How to choose right direction

Beam Distribution Requirements I

- Average current in the linac of ~1 mA at any time.
- Neutrino physics program requires high energy proton beam; hence RCS. 10 Hz, 4 msec pulses if H- beam are needed for injection in the RSC; additional chopping within the pulses with the beam circulation frequency (~500 kHz) and RF frequency (50.33 MHz) is needed.
- Mu2e experiment needs 1 MHz, 100 ns pulse sequence. Average beam current within the pulses ~3.3 mA.
- Kaon experiments require 20 to 30 MHz CW bunch sequence. Average current ~0.37 mA.
- There are other, not fully identified, experiments that also require 20 to 30 MHz CW bunch sequence with average current of ~0.37 mA.

Beam Distribution Requirements II

Pulse structure for injection in the RC

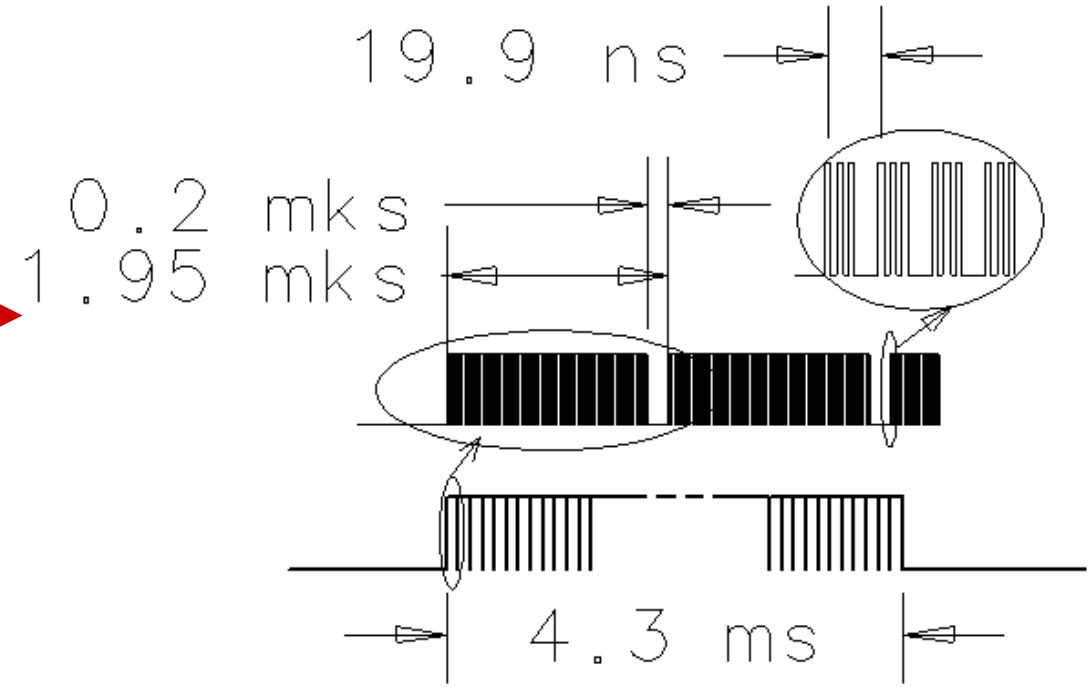

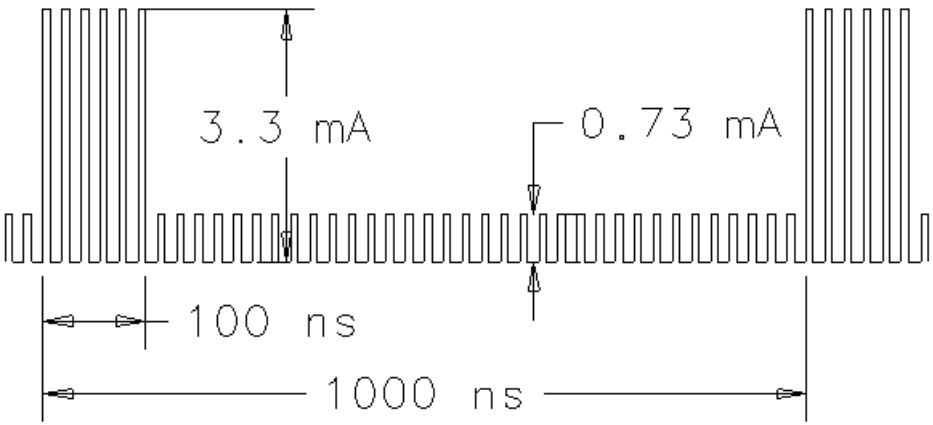

Pulse structure for 2-GeV experiments

Known Proposals: I

A chopper in the MEBT section: removes individual bunches from 162.5 MHz bunch train.

Employs:

- H^- ion source current modulation;
- Wide-band, multi-kicker beam deflection system
- Three-way RF beam splitting

Beam power dumped in MEBT - 5.6 kW

Known Proposals: II

A Narrow-Band Chopping System
in the MEBT section

Employs:

- ~30 MHz chopper band width – a big plus;
- 13 MHz beam deflector

Not fully satisfies the beam distribution requirements

Beam power dumped in MEBT - ~10 kW

Beam Preparation Study Strategy

- Beam preparation and beam distribution are interconnected tasks
- The main work of chopping made in LEBT section; fine cleaning left for MEBT chopper(s)
- Find appropriate combination of LEBT optics and beam deflector solutions
- Make a choice of the beam handling scheme and agree on the system's critical elements development and testing plan
- A devoted test facility must include H^- source, LEBT, RFQ, MEBT, and beam diagnostics equipment. Beam transport modeling activities must interactively support the development

Beam Preparation: Experience and Known Problems - I

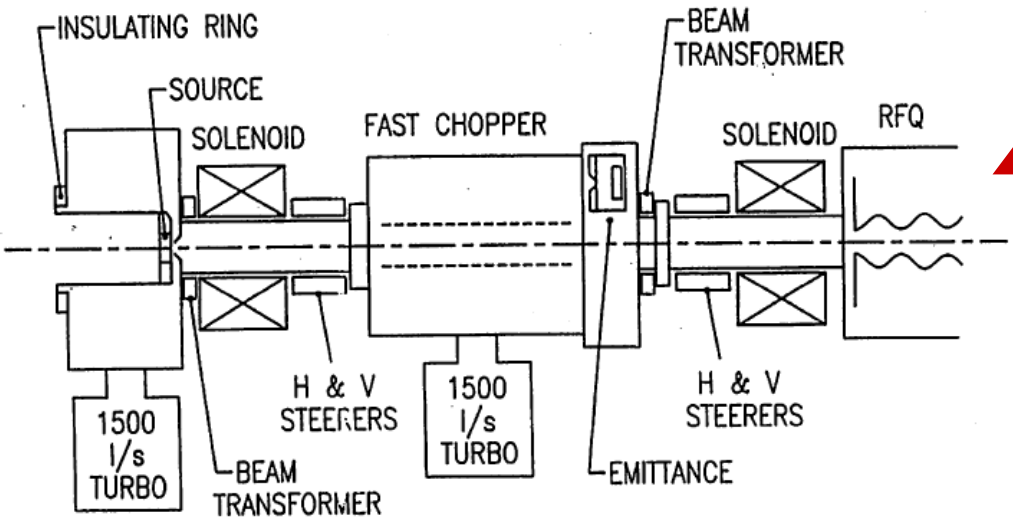

BNL – 1989 (AGS Booster)

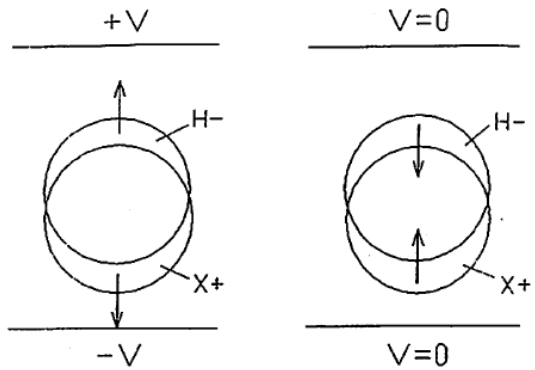

Ion channel issues

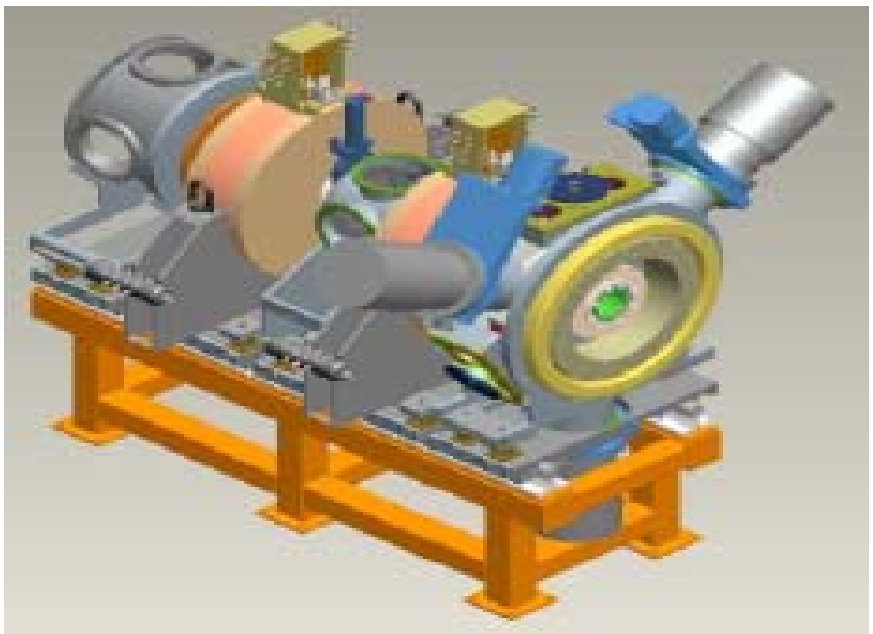

SNS - 2008

Beam dump activation;

Beam deflector sparking

Beam Preparation: Experience and Known Problems - II

Report by V. Sahni at the HPPA-09 (Oct 09, FNAL)

INDIA

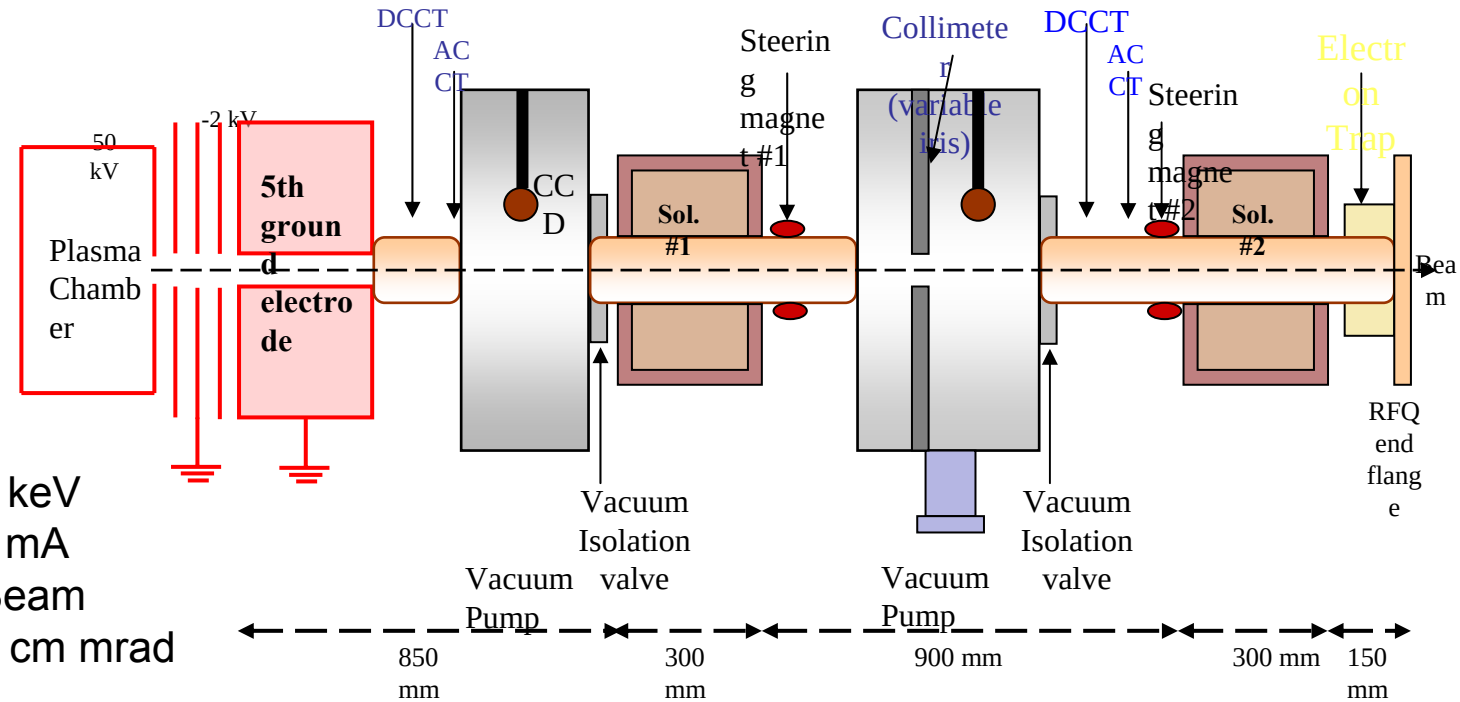

Beam Energy = 50 keV
Beam current = 30 mA
RMS Normalized Beam Emittance = 0.02 π cm mrad

Degree of Space Charge Compensation (%)	I_{eff} (mA)	Max. Beam size (cm)	Emit at end of LEBT (cm mrad)	Transmission through the RFQ (%)
0	30	13.0	0.02081	97.1
90	3.0	7.0	0.02003	96.0
95	1.5	6.8	0.02000	97.3
98	0.6	6.4	0.02000	97.4

Beam Preparation: Experience and Known Problems - III

CERN – LINAC-4
Report by C. Rossi in 2007

LEBT

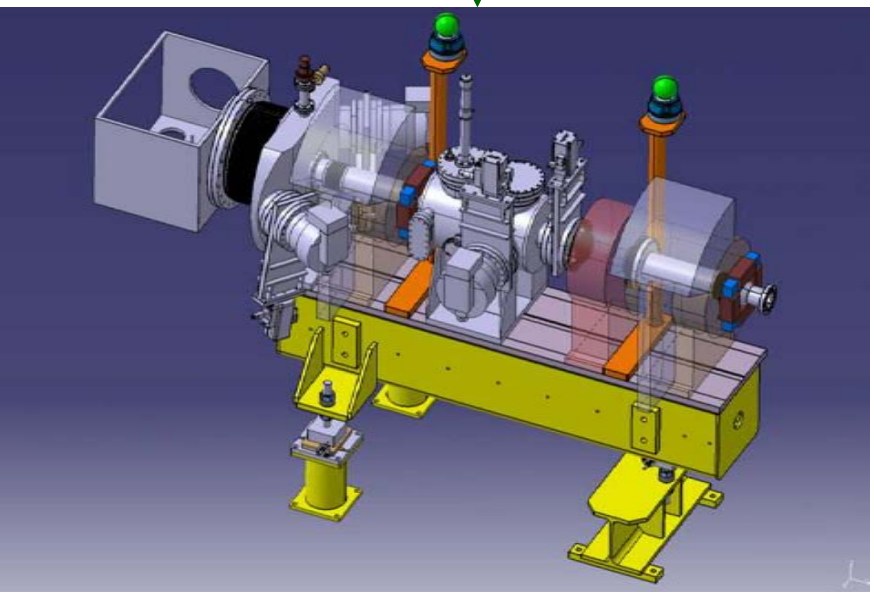

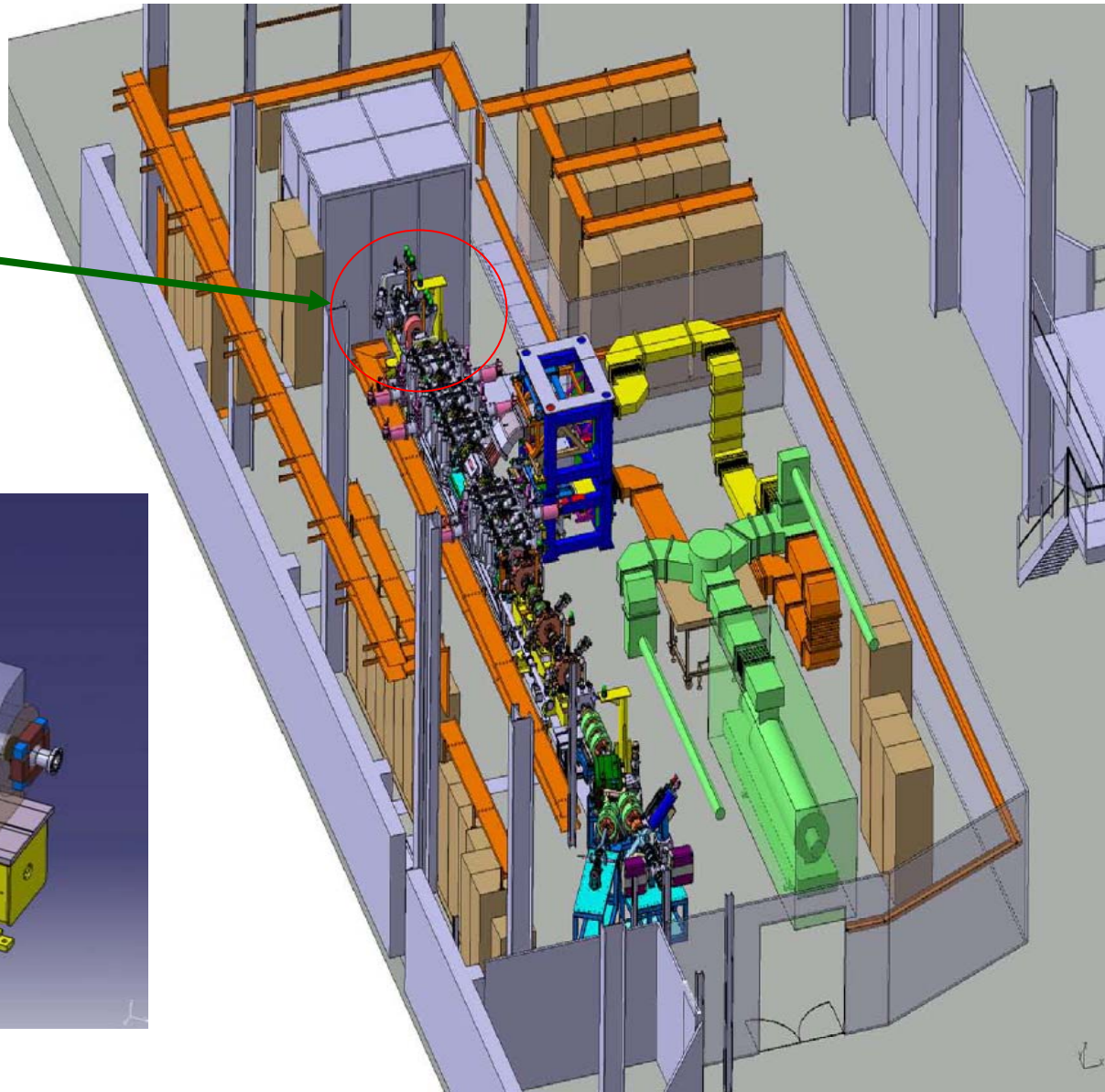

LEBT Concept

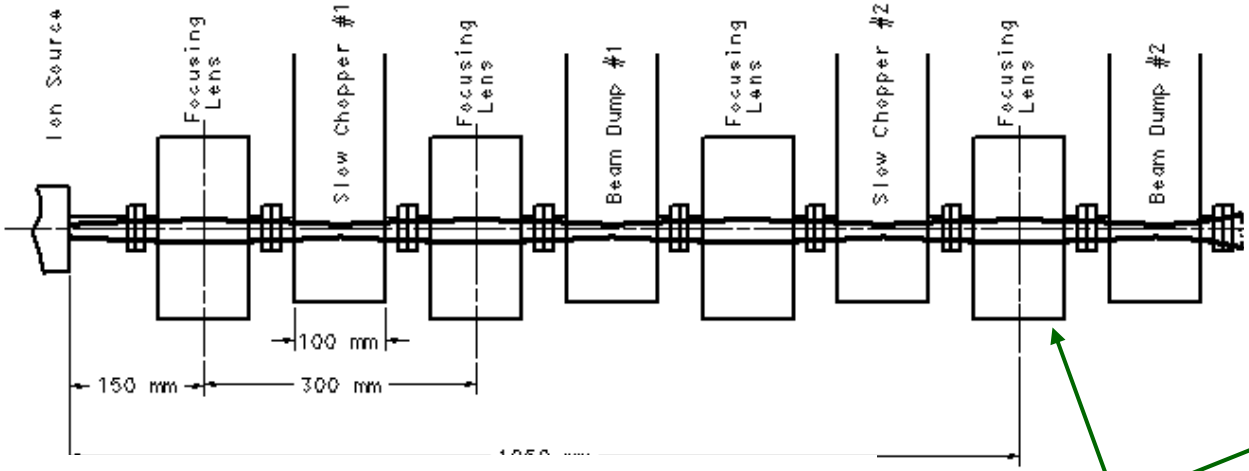

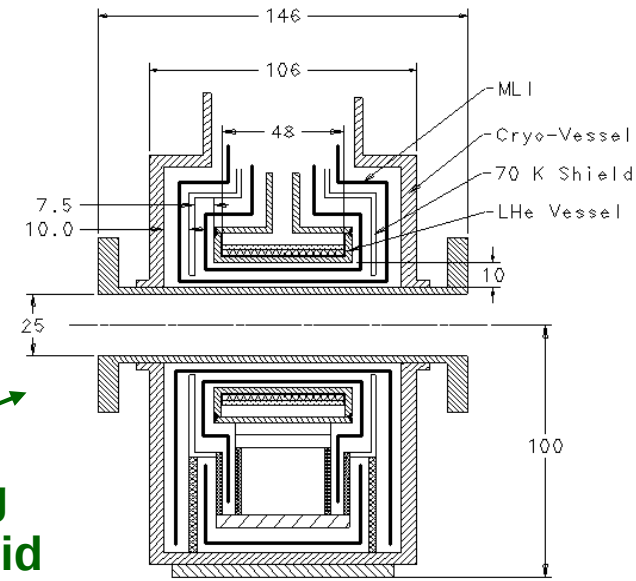

Superconducting Focusing Solenoid

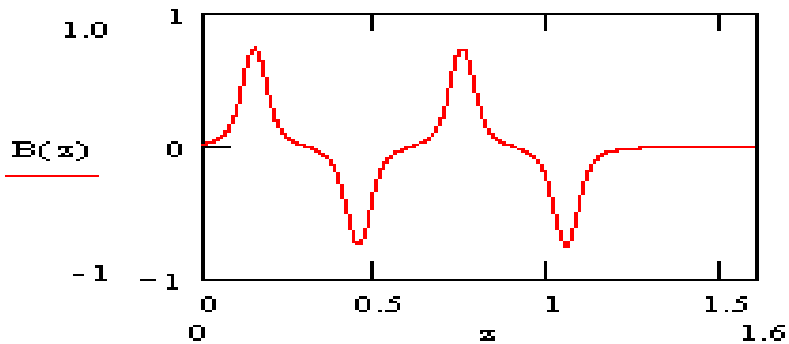

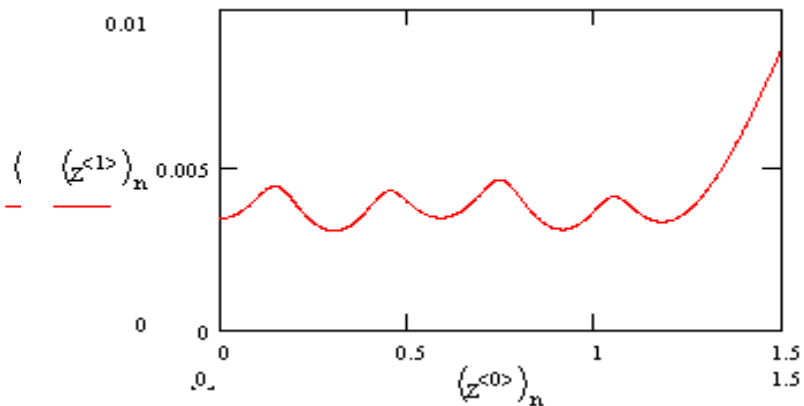

RMS Beam Radius
I = 10 mA;
ε_n = 0.25 mm-mrad

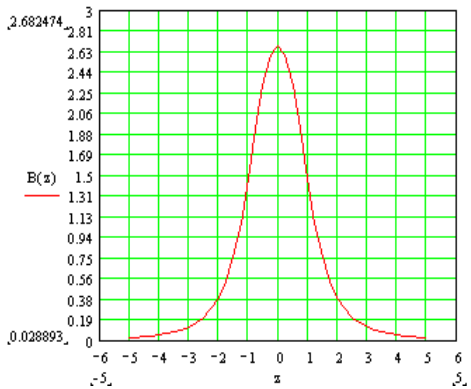

B @ I = 330 A;
Max B < 1.5 T

LEBT Chopping

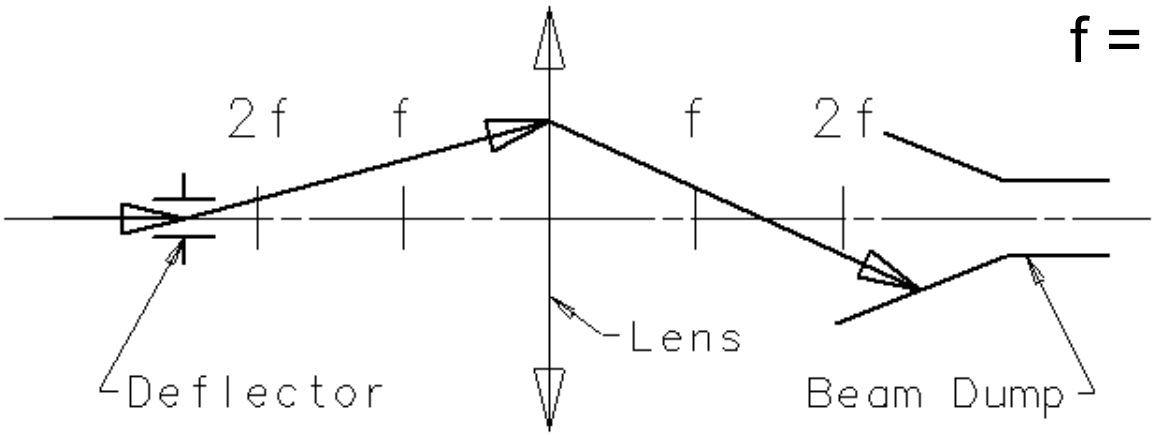

$f = 8*m/q*T(eV) / \langle B^2 Ls \rangle$

$$\alpha = \frac{E_\perp \cdot L}{2 \cdot T(eV)}$$

Put a beam dump inside focusing solenoid

α = 0.1
(Δr = 15 mm,
Δ L = 150 mm) → L = 75 mm; T = 50 keV,
→ E = 0.13 kV/mm → H = 25 mm → U = ± 1.7 kV

Beam deflector concept

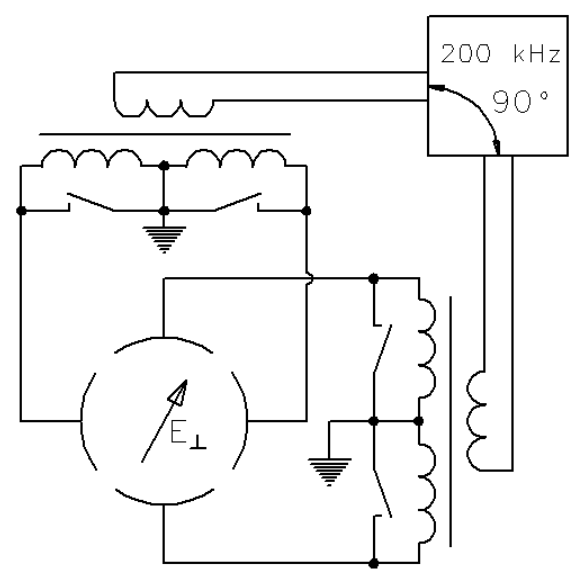

The approach can work for :

- 100 ns, 1 MHz pulses for Mu2e;
- 4 ms, 10 Hz pulses for RCS with embedded 200 ns, 500 kHz gaps

Beam Preparation/Distribution Schemes - I

- Starting with the most flexible:
  3 ion sources

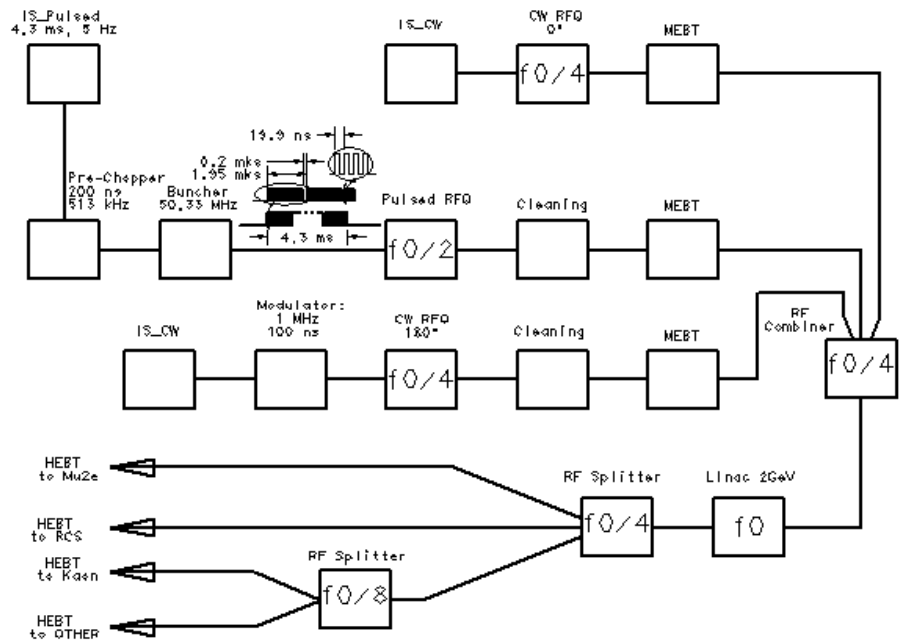

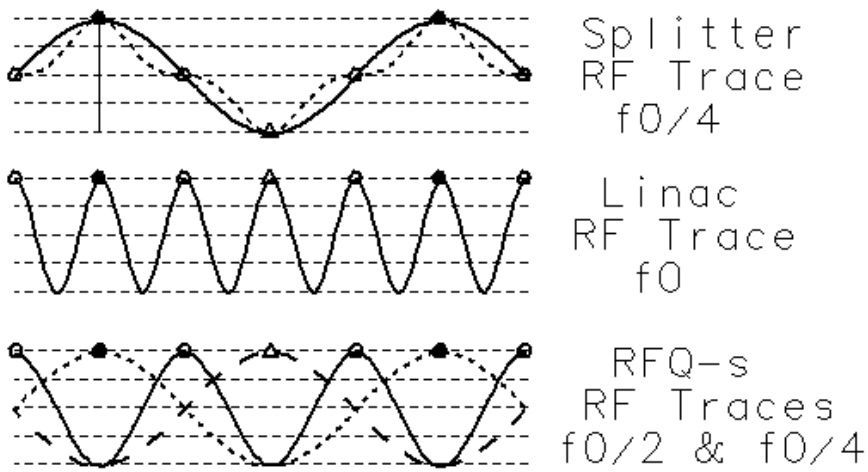

4-ms gaps must be created in the 1-st and the 3-d channels;
100-ns gaps must be created in the 1-st channel

Beam Preparation/Distribution Schemes - II

2 sources – RF Combining/Splitting

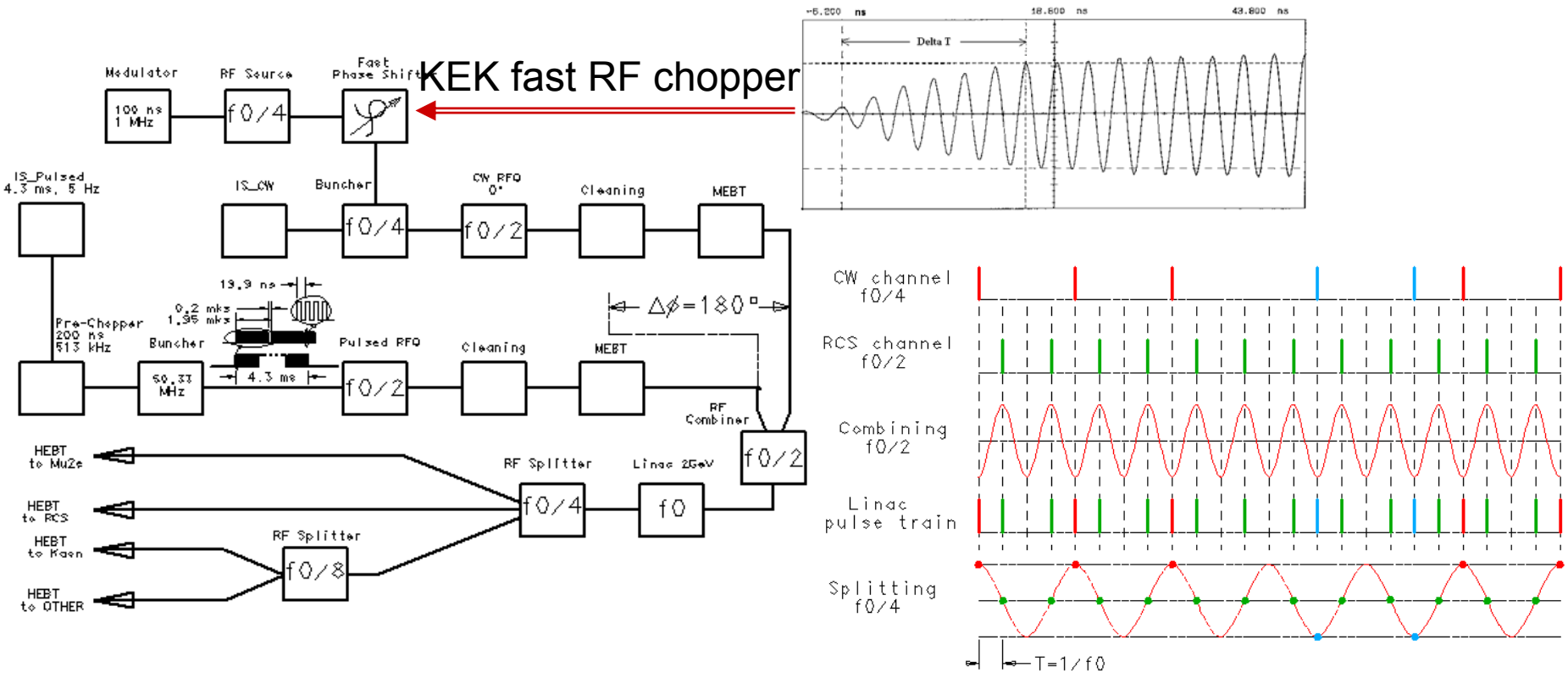

4 ms gap in the CW channel is needed

Ion source current modulation is needed

Beam Preparation/Distribution Schemes - III

2 sources – Mixed Splitting

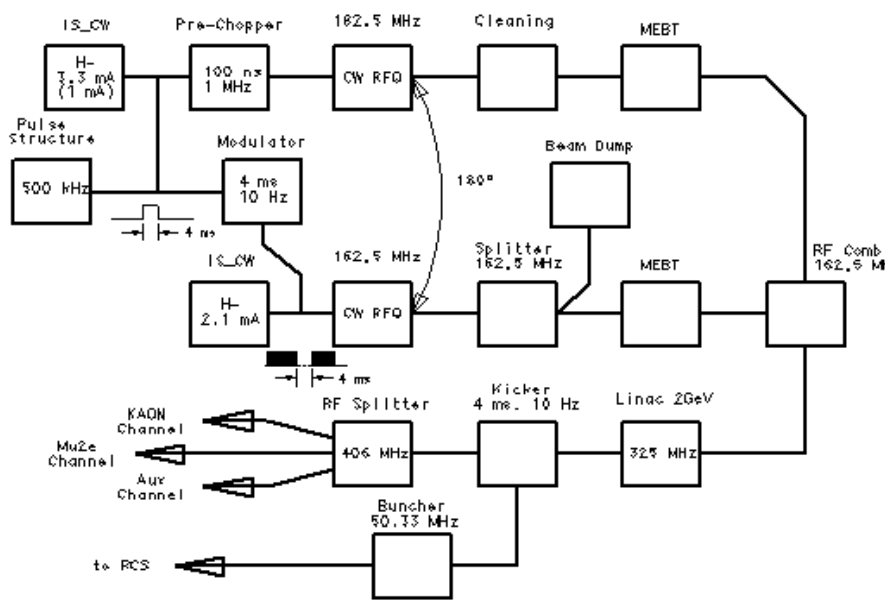

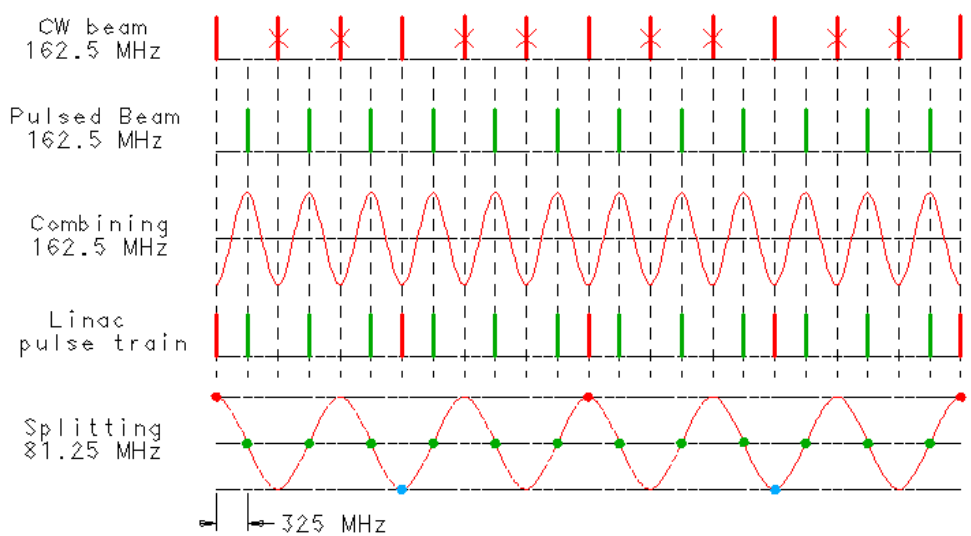

Current modulation in the ion sorce of the first channel

1.4 mA (3.5 kW) beam dump in the second channel MEBT

4-ms gap needed as before

Beam Preparation/Distribution Schemes - IV

2 sources – kicker-based

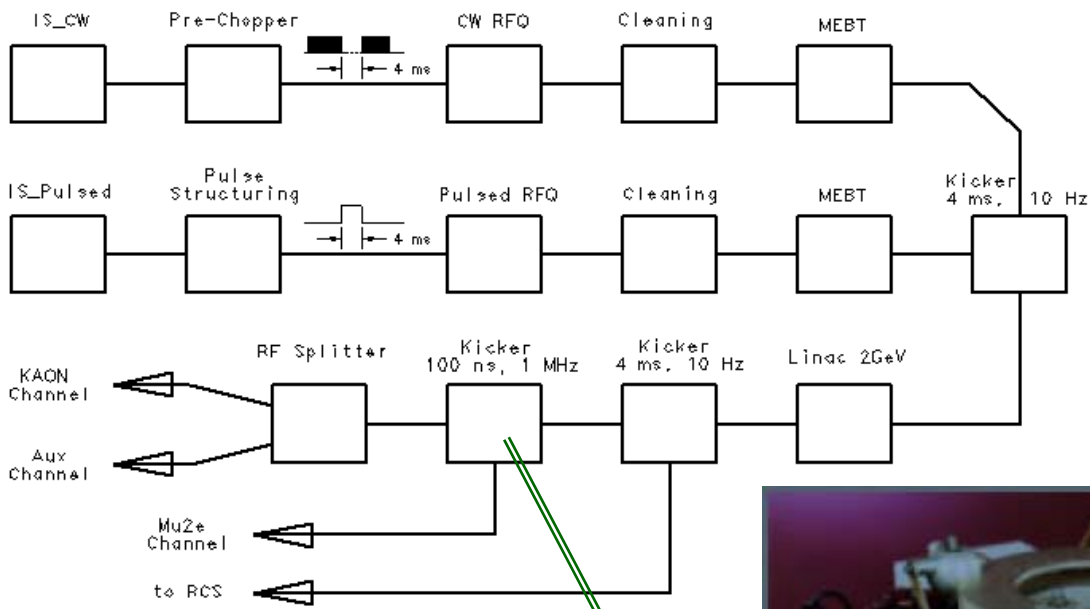

LLNL Pulser (Linac-2000)

Output Voltage	20 kV into 50Ω
Voltage Risetime/Falltime	<10 ns 10-90%
Pulsewidth	16ns-200ns variable within burst
Burst Frequency	>1.6 MHz - 4 pulses

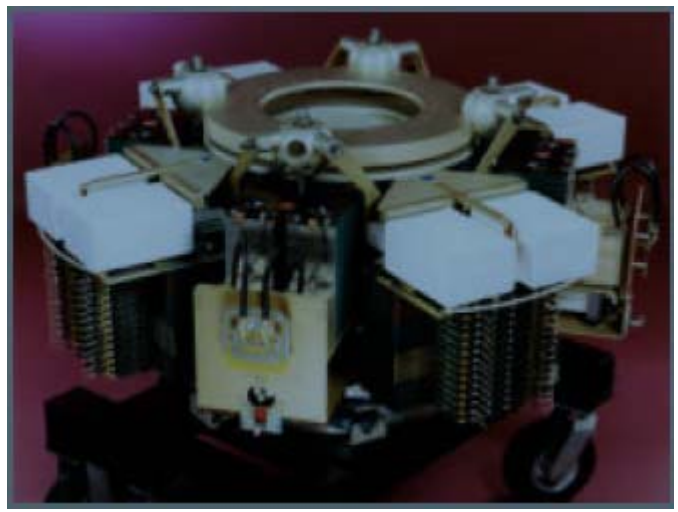

1 MHz, fast rise and fall time, 100 ns pulse width 2 GeV extraction kicker;
Beam structure within 4-ms pulse and corresponding gap in the first channel

Beam Preparation/Distribution Schemes - V

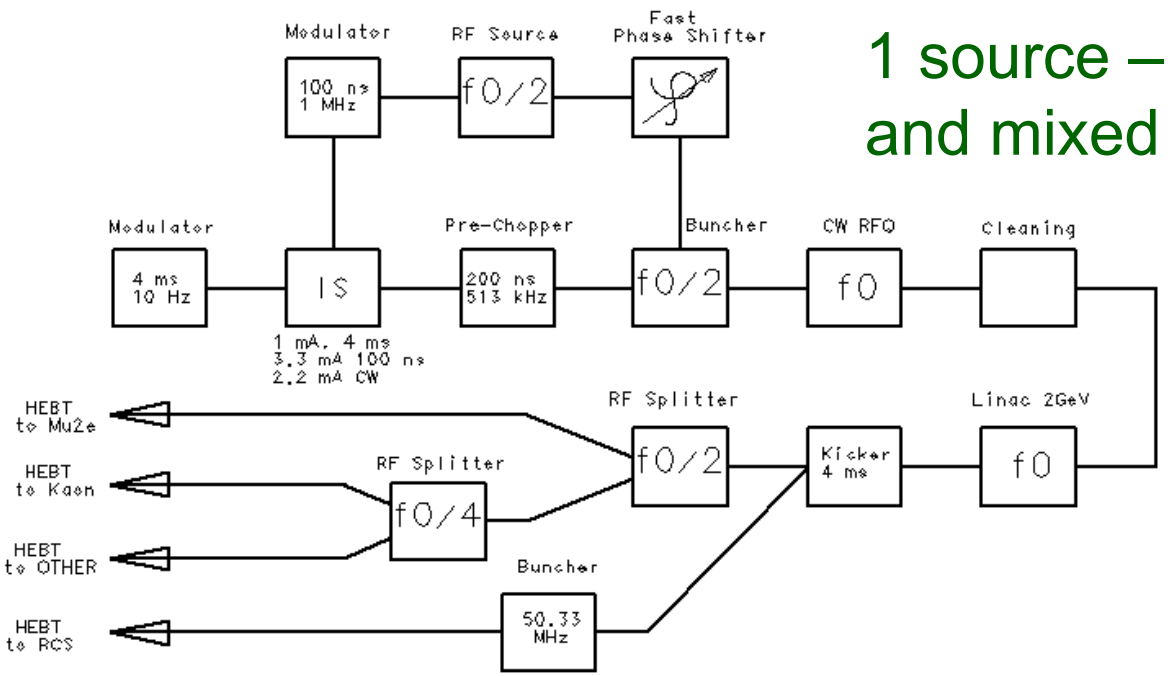

1 source – phase shift combining and mixed splitting

Very ambitious

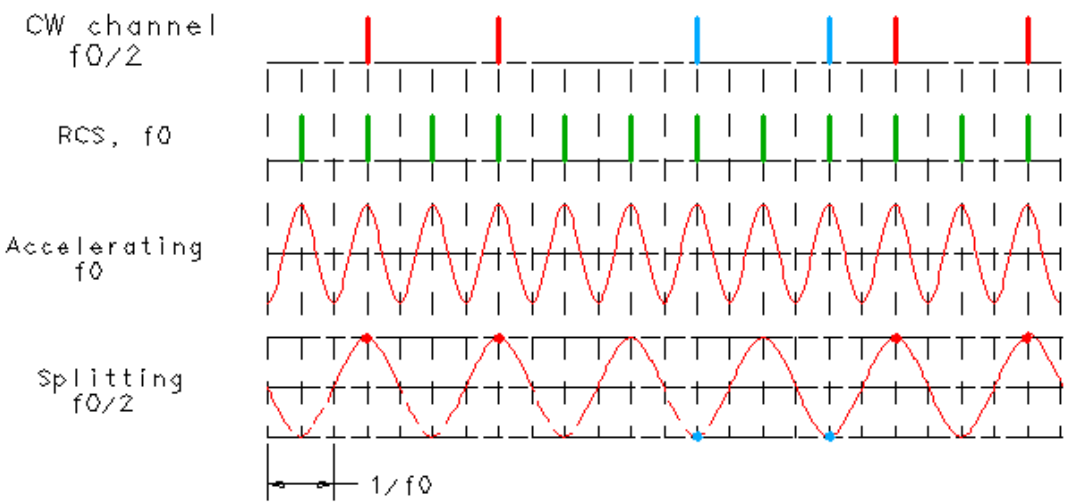

How to Make the Right Choice

Scheme #	I	II	III	IV	V
Number of Ion Sources	**3**	**2**	**2**	**2**	**1**
4 ms Pulse Structure	+	+	+	+	+
1 MHz Pre-Chopper	+	+	+	+	—
Source Current Modulation: 10 Hz	—	—	+	—	+
Source Current Modulation: 1 MHz	—	+	—	+	+
LEBT	+	+	+	+	+
1 MHz Kicker	—	—	—	+	—
10 Hz Kicker	—	—	+	+	+
RF Splitter	+	+	+	—	+
RF Phase Modulation	—	+	—	—	+