Argonne NATIONAL LABORATORY

... for a brighter future

Triple-Spoke cavities for a CW proton Linac

P.N. Ostroumov

Physics Division

September 11, 2009

U.S. Department of Energy

THE UNIVERSITY OF CHICAGO

Office of Science
U.S. DEPARTMENT OF ENERGY

A U.S. Department of Energy laboratory managed by The University of Chicago

Properties of SC TSRs

- Proven technology in frequency range ~325-350 MHz
  - Accelerating field ~11.5 MV/m
  - ~10 W into LHe at 2K
  - Residual resistance ~6 nOhm@1 kGs
- Effective in the energy range from 100 to 600 MeV
- High-shunt impedance – low cryogenics load
- Excellent mechanical stability - low microphonics
- Provide ~10 MV per cavity at moderate level of peak fields, demonstrated in 2 prototypes

Main TSR parameters for the CW Project X

	Parameter	**Unit**
Frequency	**325**	**MHz**
Optimal β	**0.62**	
Operating temperature	**2.1**	**K**
Operation mode	**CW**	
Nominal accelerating voltage	**~10**	**MV**
Beam power	**<9**	**kW**
Residual resistance, R_S	**<15**	**nOhm**
E_{PEAK}	**~34**	**MV/m**
B_{PEAK}	**<800**	**Gs**
R/Q_0	**~550**	**Ohm**
$G=R_S \cdot Q_0$	**~110**	**Ohm**

Project X

- Requires about 50 TSRs in the energy range 120-460 MeV
- RF power ~9 kW per cavity for 1 mA beam
- Requires ~17 kW RF amplifier

ANL TSRs: 2 prototypes

345 MHz β=0.5

Triple-spoke

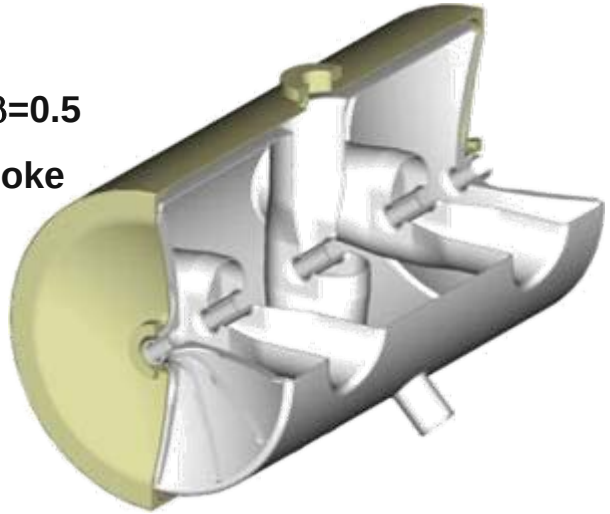

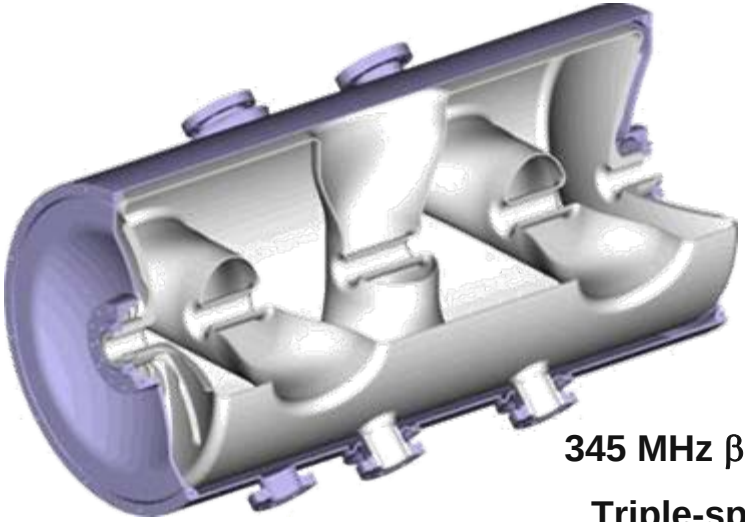

345 MHz β=0.62

Triple-spoke

TSR fabrication technology

- Bulk Nb cavities, optimized to reduce B_{PEAK} and E_{PEAK}, mechanically stable, negligible He pressure sensitivity
- Stainless steel He vessel
- Electropolishing, degassing in vacuum furnace, HPR

Automated HPR: Triple-Spoke

TSR – present status

- ANL built and tested 2 prototypes
  - β_G =0.5 TSR prototype is a full-production style cavity (jacket, flanging, ports, mechanical supports)
- Demonstrated 6 nOhm@1 kGs residual resistance. Operation at best Q_0 achieved using electro-polishing (EP) and baking
  - Our experience justifies $Q_0=1\times10^{10}$ and we suggest ~10 nOhms@800 Gs to give appreciable operating margin

TSR performance

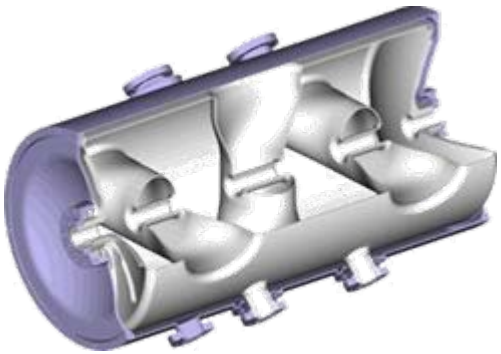

- Q-disease was observed; hydrogen degassing at 600 ^{o}C was performed at ANL
- 2 K surface resistance decreased substantially after 600 ^{0}C bake.
- This low surface resistance for this class of cavities has only been achieved using electro-polishing and baking

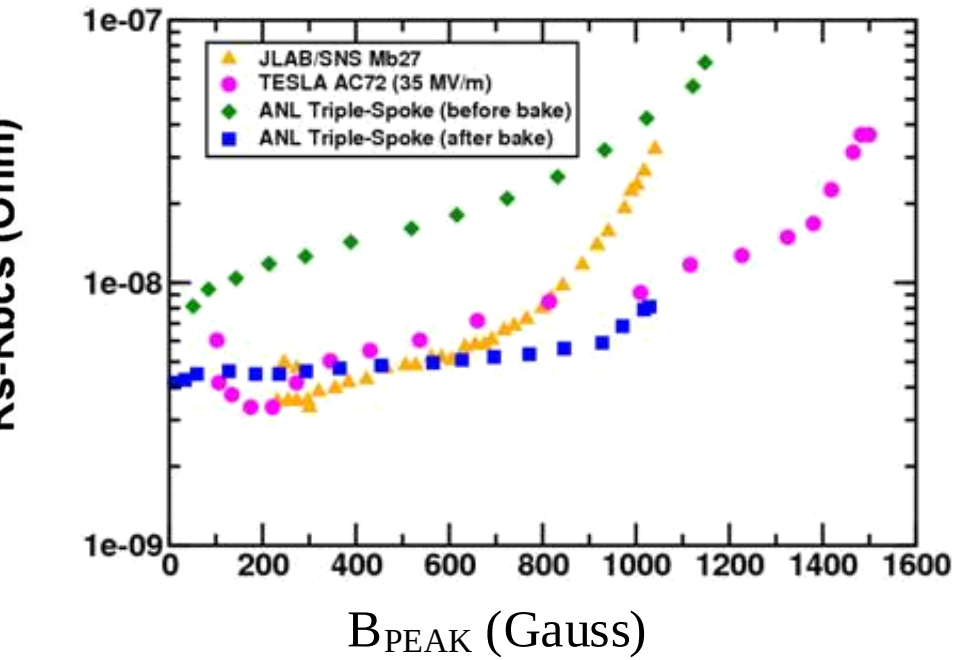

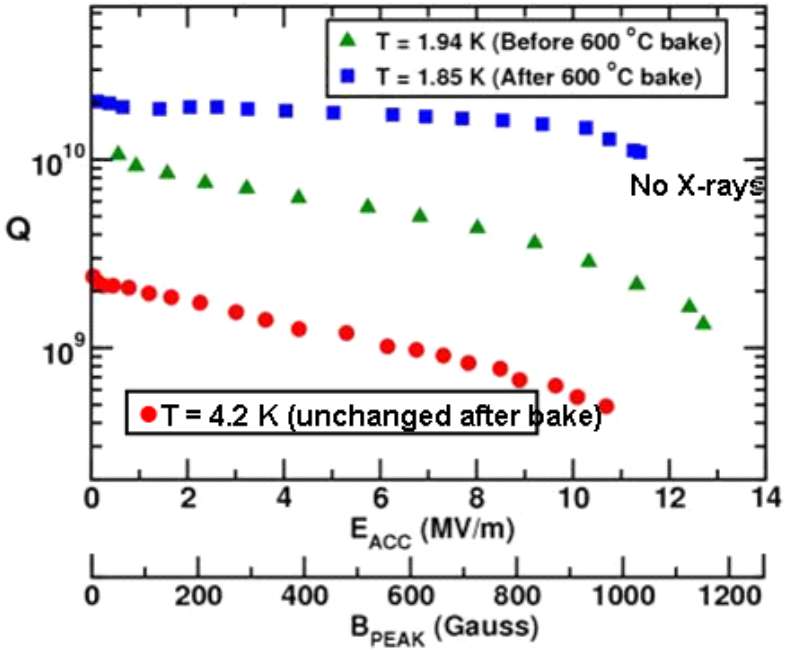

Cryogenics load

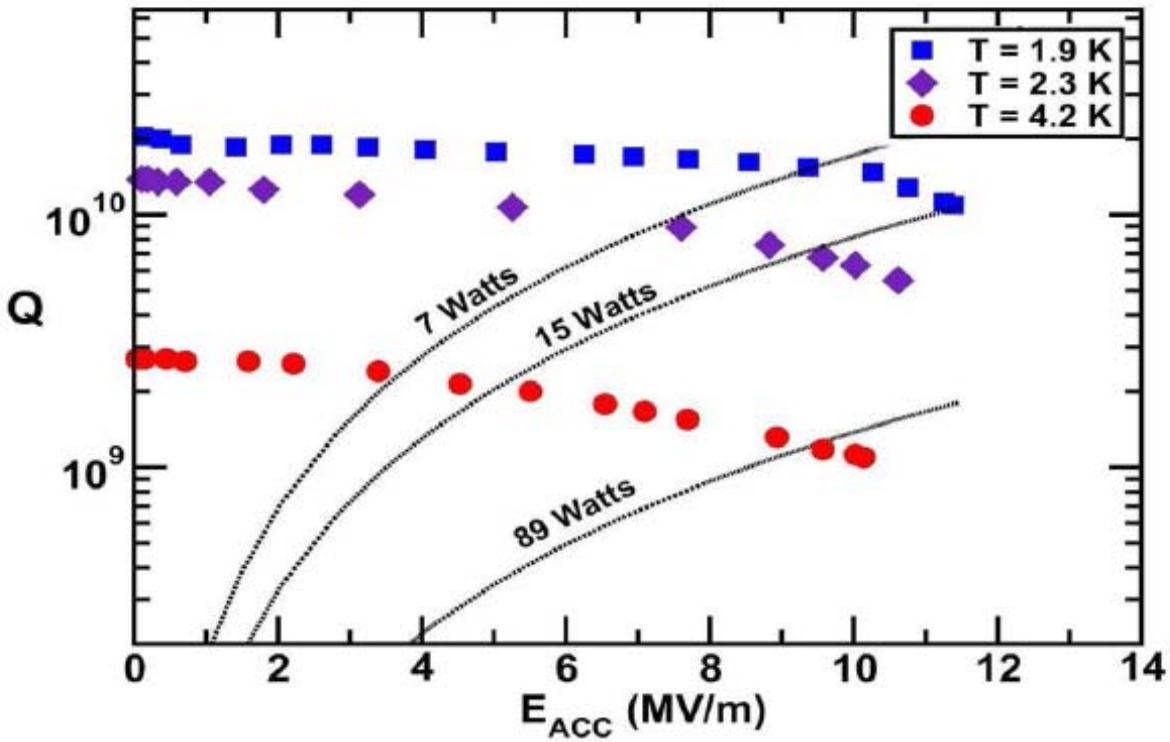

Figure 8: Q-curve test results (colored symbols) and lines of constant rf power for a 345 MHz β=0.63 triple-spoke cavity developed at ANL. At T=2 K, 7 Watts input power gives and energy gain of 7 MV/cavity.

Microphonics at 4.2K

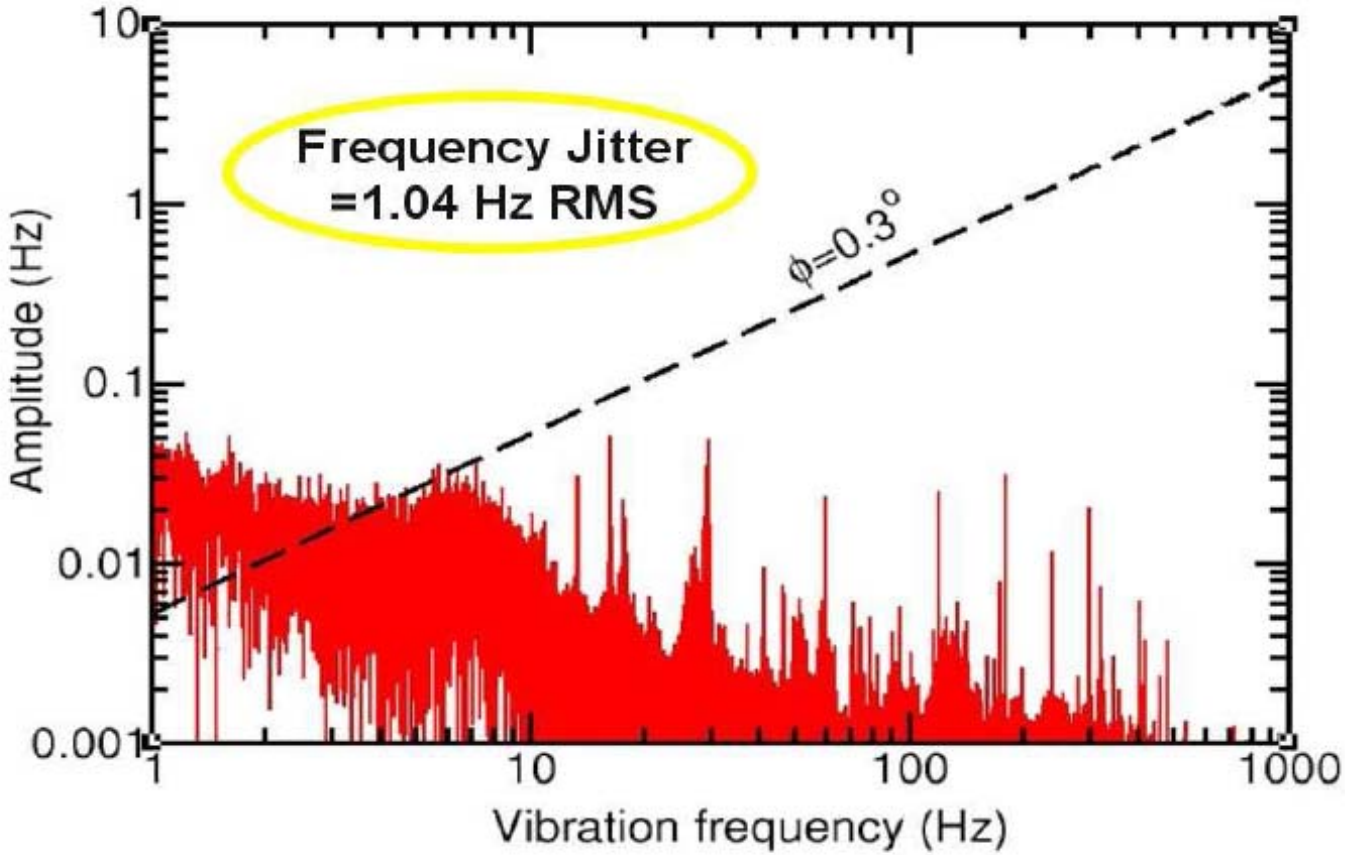

Figure 9: Microphonics spectrum of the ANL β=0.5 SC 3-spoke cavity operating at T=4.2 K and E_{ACC}=9.7 MV/m.

TSR: RF power and microphonics

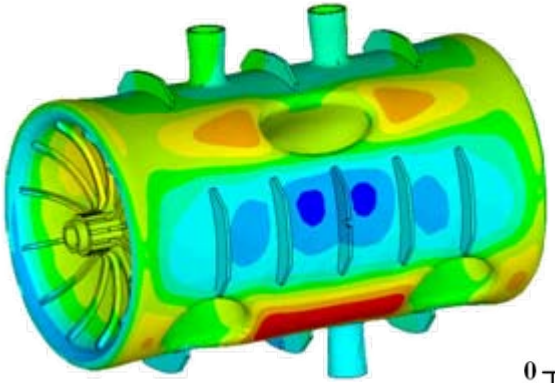

TSR df/dp tuned to~0 and Tested experimentally

RMS microphonics 0.44 Hz for β=0.5 TSR

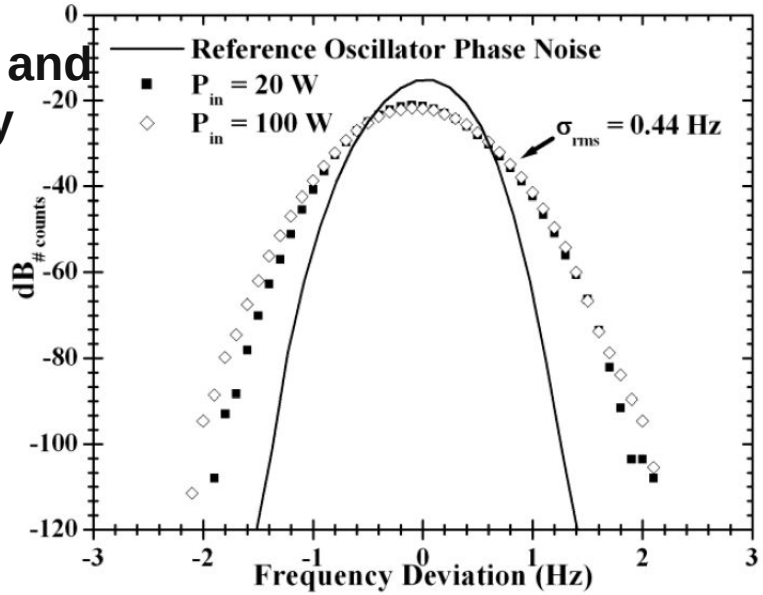

TSR w/ piezo as tested

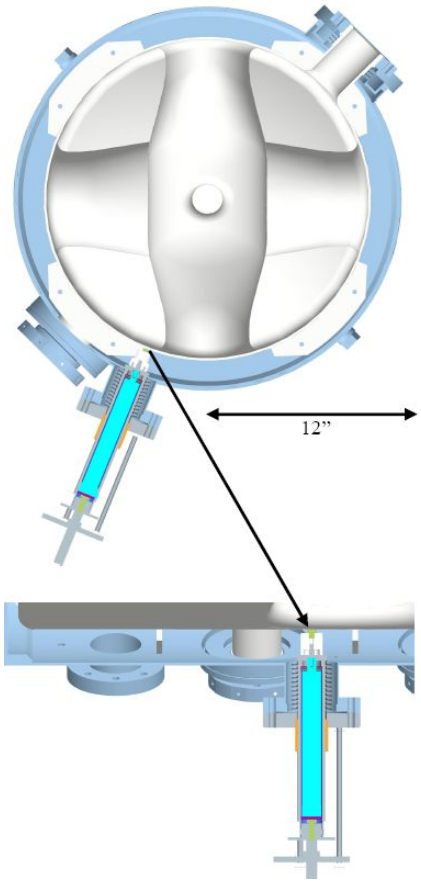

- Fast tuner reduces a tuning window required from RF to <10 Hz

RF power and microphonics

- Fast tuner at 1 mA may not be necessary, extra 2.5 kW provides ±10 Hz window

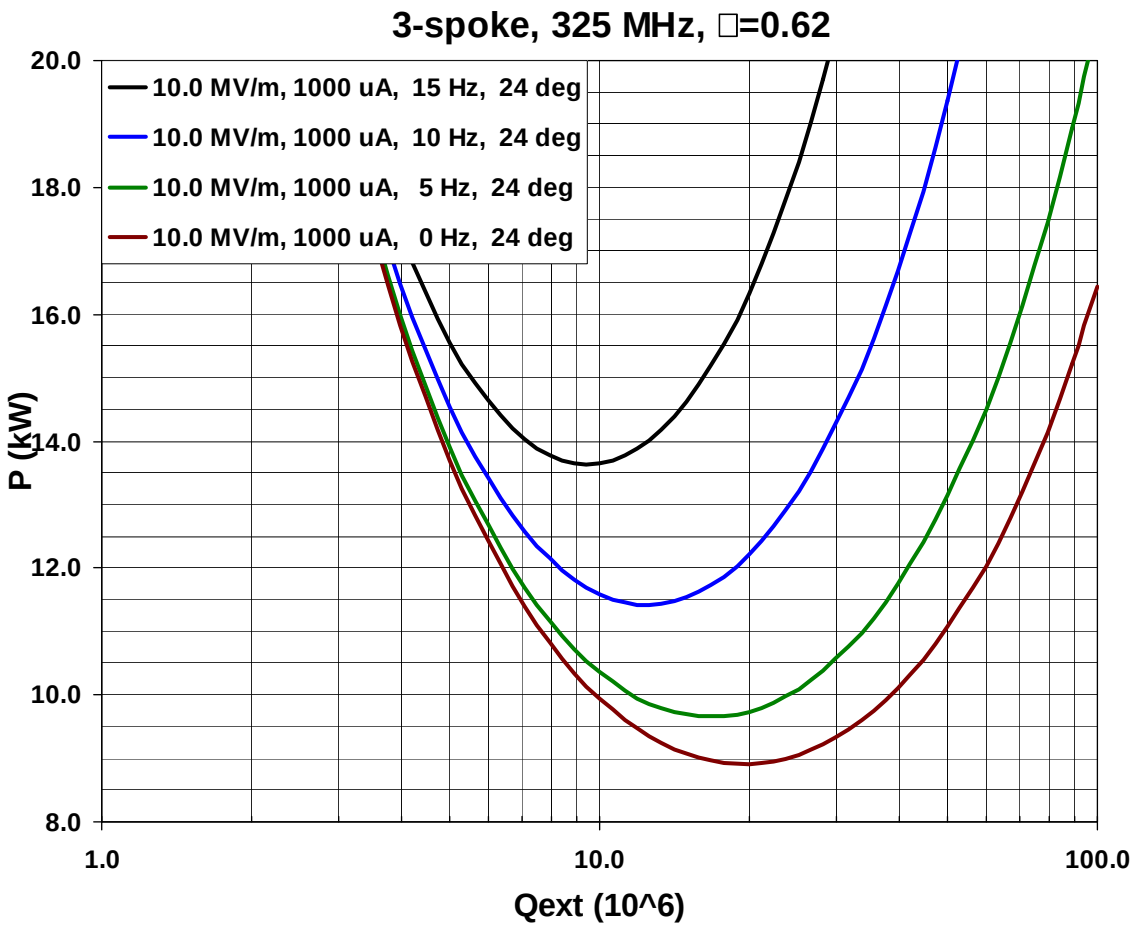

Pneumatic slow tuner

- Provides 0.04% frequency range 40 kHz@109 MHz

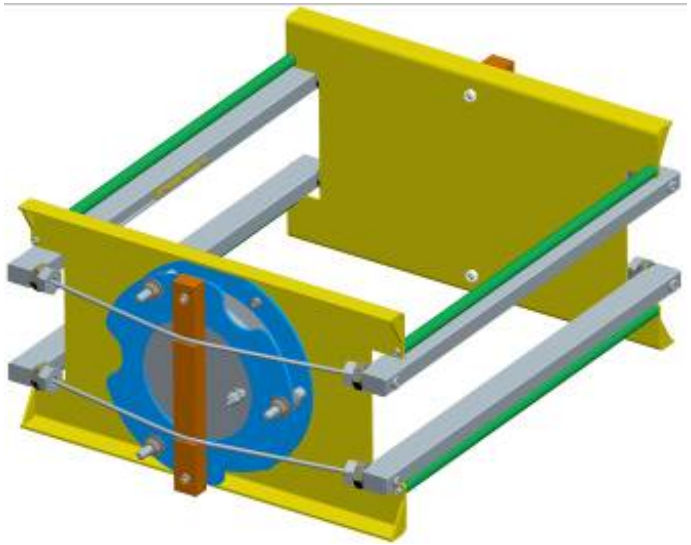

RF coupler

- Capacitive coupler
- Should be designed for full reflection
- Can be similar to FNAL SSR coupler with some modifications
- Currently we are building 2-kW capacitive coupler for ATLAS application
  - Cold ceramic disk
  - Warm window

Ivan Gonin's EM design (FNAL)

- F=325 MHz, β_G=0.6
- about 30% improved B_{peak}
- requires more stiffening than ANL TSR

Thorough mechanical design needs to be done

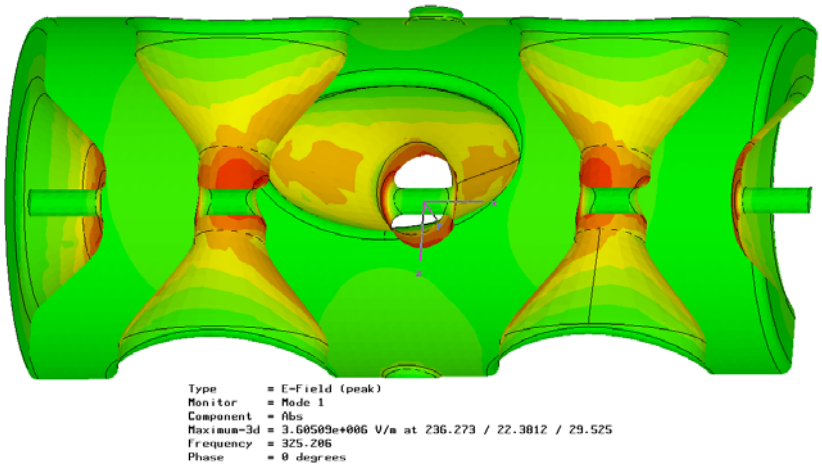

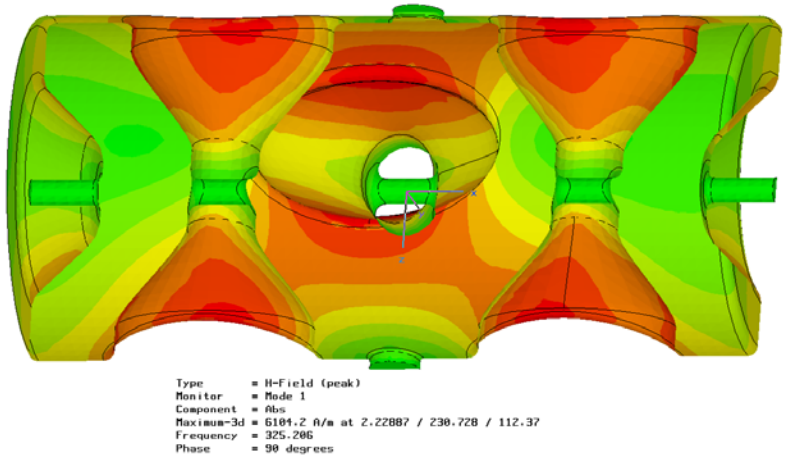

TSR development and testing at ANL

- SRF infrastructure at ANL is well developed
- 4K and 2K test cryostat is available
- Cryogenics plant is available to test cryomodule
- Clean-rooms
- Electro polishing, BCP and HPR facilities
- Trained SRF personnel, experienced cryogenics engineers and technicians
- RF engineers with long-term experience in SRF

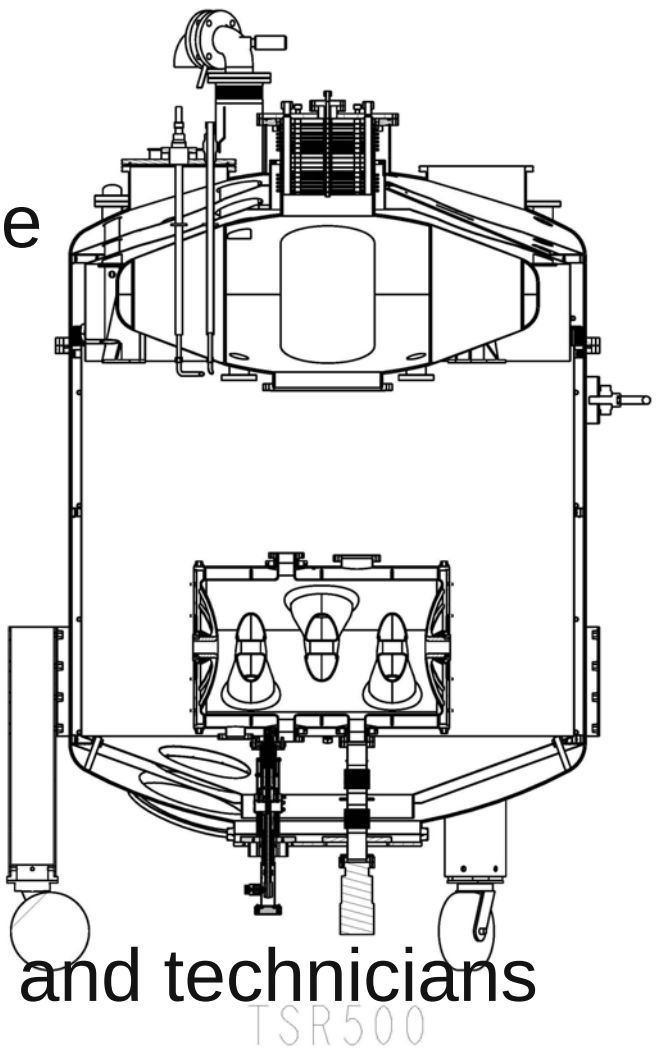

Chemistry room and new test cryostat

Possible areas of ANL Physics Division contribution

- ANL is well prepared to build and test triple-spoke prototype cavity, prototype cryomodule
- Build all TSRs and cryomodules (total ~10), deliver, install and provide commissioning
- We have expertise in all systems of CW linac:
  - Ion sources
  - RFQ
  - Choppers
  - TEM-class SC cavities
  - Analog LLRF
  - Solid-state amplifiers