Overall Linac design and 1.3 GHz cavities

Nikolay Solyak
FNAL

(on behalf of the Fermilab TD SRF design group and
APC SRF Linac design Dept teams:
V. Yakovlev, I. Gonin, A. Lunin, T. Khabibouline,
N.Perunov, F.Ostiguy)

The schematic layout of ICD-2 accelerator complex

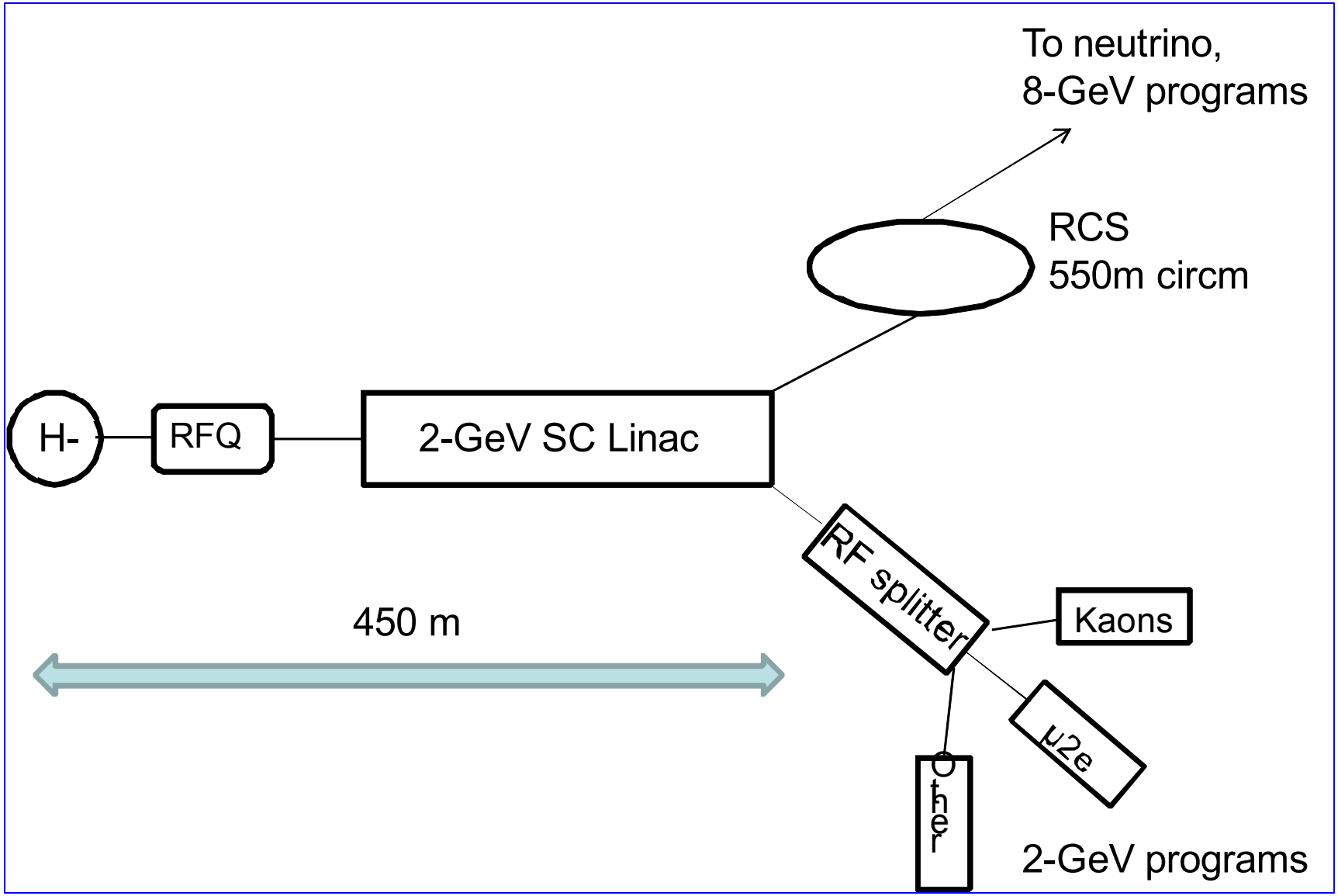

Ion source and RFQ

- H^- ion source :
  - 10mA DC current, 50-60 kV
  - Normalized transverse emittance ~0.25 mm-mrad (rms)
  - Sources with similar parameters are available today (TRIUMF~7mA, BINP ~10-15mA)
  - Maintenance >~3 weeks

- CW RFQ: 325 MHz, 2.5 MeV, 10 mA
  - No SC RFQ in operation for protons/H- (80 MHz, 350 keV SRFQ for heavy ions operates for PIAVE linac).
  - Number of CW RFQs operating at room temperature for beam currents of up to 100 mA and energies of up to ~7 MeV.
    - LEDA CW RFQ (LANL) 350 MHz, 6.7 MeV, 100 mA, and wall losses of 1.2 MW.
    - KOMAC/KTF: 3 MeV , 20 mA , 3.3m. The wall losses are 350 kW.
  - Design is feasible. RF power ~350-450 kW, The RF source for a CW RFQ at ~1 MW power is available at 350 MHz; it is possible to redesign it for 325 MHz.

Room Temperature CW RFQ:

Table 1
Parameters for some past and future high-current cw RFQ's

PROJECT	FREQ	ION	I_{out}	E_{in}	E_{out}	FIELD	LENGTH	STATUS
	MHz		mA	MeV	MeV	Kilpat.	λ	(cw beam)
FMIT[a]	80	H_2^+	100	0.075	2.0	1.7	1.03	1985
RFQ1-600[b]	267	H^+	75	0.05	0.6	1.5	1.31	1988
GTA[c]	425	H^-	50	0.035	2.5	1.8	3.98	1990[d]
RFQ1-1250	267	H^+	75	0.05	1.25	1.8	1.31	1991
✓ CWDD	352	D^-		0.2	2.0	1.8	4.66	1992
✓ ATW	350	H^+	125	0.1	2.5	1.8	3.97	proposal
BTA	201	H^+	100	0.1	2.0	1.8	2.24	design
IFMIF	175	D^+	125	0.1	3.0	1.8	3.15	proposal
ITEP-a	75	D^+	250	0.1	6.0		2.5	proposal
ITEP-b	75	H^+	150	0.1	3.5	> 1.4	2.0	proposal

*"High – Power RFQs", by G.E. McMichael

Required power at 325 MHz is ~ 350 ÷ 450 kW.

➢ Operating CW RFQ – LEDA (LANL).

- H^+
- E=6.7 MeV;
- I=100 mA;
- F=350 MHz
- P_{wall}=1.2 MW
- Length = 8m

- *For E=2.5 MeV ➔ P_{wall}*

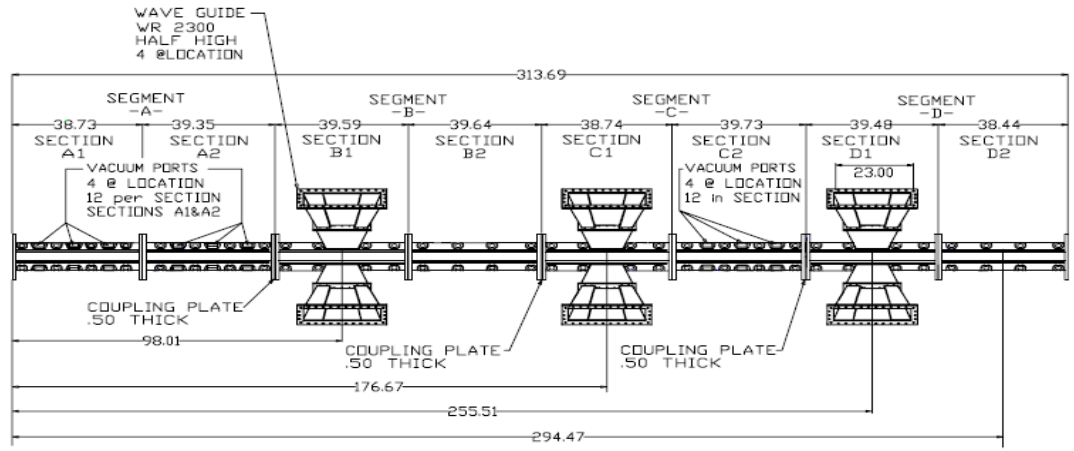

Figure 4: APT/LEDA RFQ Schematic

➢ Project of CW RFQ – **KOMAC/KTF**

- H^+/H^-
- E=3 MeV;
- I=20 mA;
- F=350 MHz;
- P_{wall}=350 kW
- Length = 3.3 m

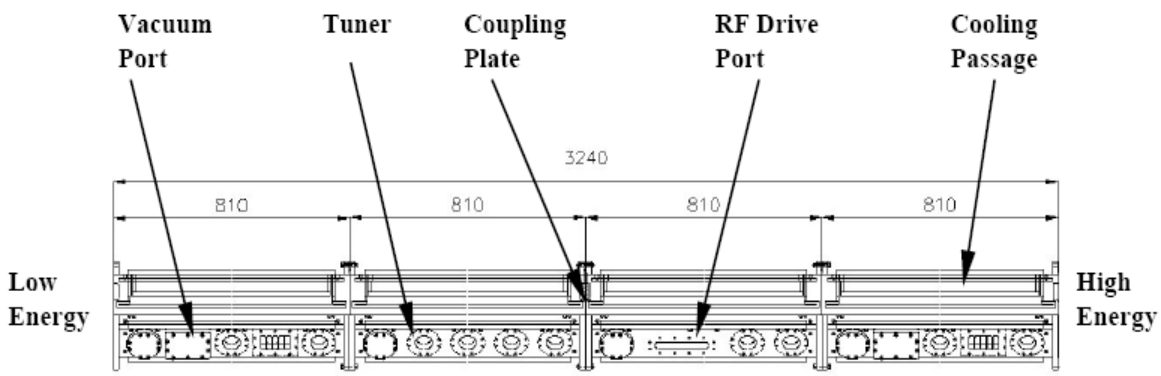

Figure 1. 3MeV, 350MHz, cw KOMAC/KTF RFQ

Required Beam Structure

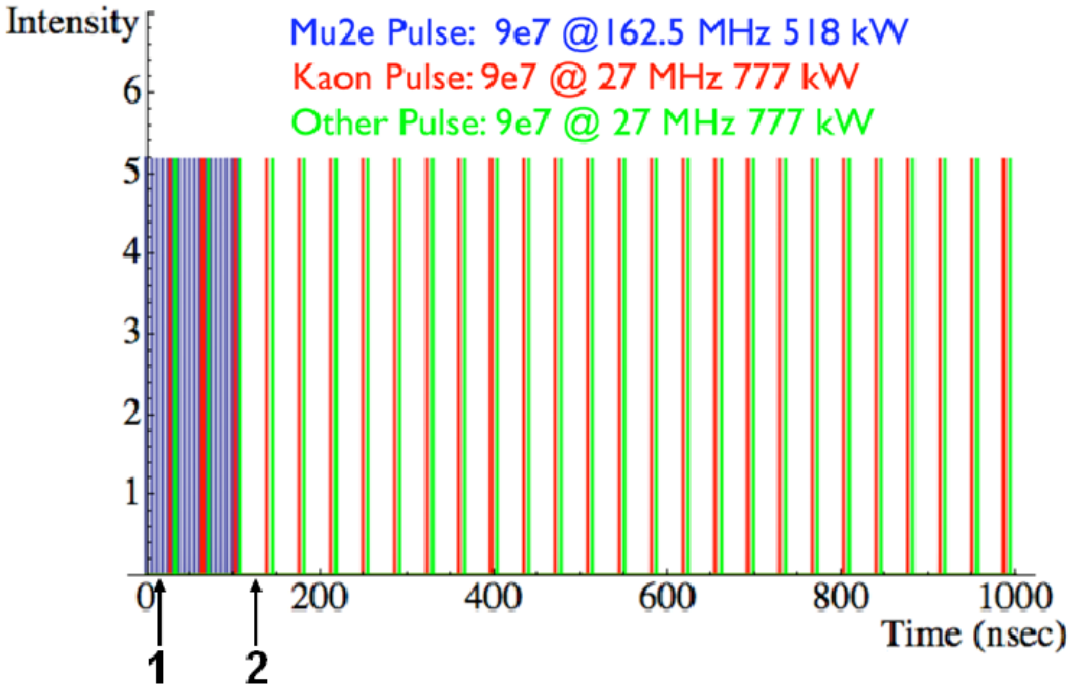

1 μsec period for proton linac:

- blue pulses for the muon conversion experiment
- red for rare kaon decay experiments
- green for other experiments

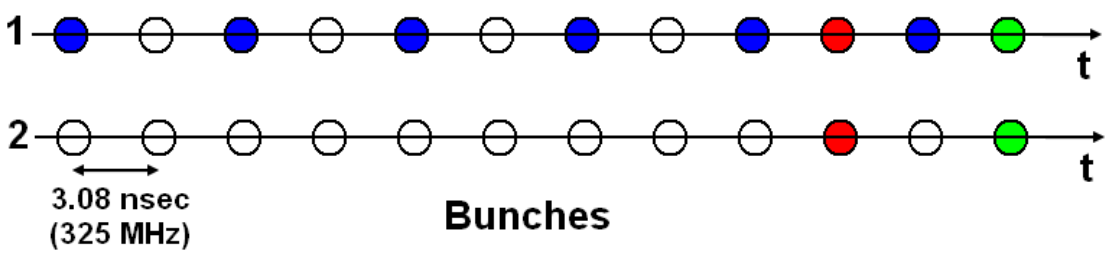

- In this example the H- ion source delivers about 5 mA DC.
- The average current is then reduced to 1 mA by chopping.

Chopper*

- Ion source delivers 5-10 mA of average current;
- Average current in the linac is 1 mA;
- 80-90% of the ion source current is chopped out;
- Challenging task. Multi-stage chopping is desired (LEBT and MEBT)

Power constrains:

- If chopping takes place after RFQ at 2.5 MeV, the beam dump load is 10-20 kW that requires:
  - a special optics system to remove the chopped bunches out;
  - a high – power dump design.

  Problem: activation (SNS experience)

- If chopping takes place right before RFQ at ~50 keV (SNS), the beam dump load is 200-450 W that still constitute a problem.

*see Bob Webber's presentation.

The chopper may be multi-stage integrated into the self-consistent system ion source-LEBT-RFQ-MEBT:

- Pre-chopping in the ion source at 27 MHz may allow to get rid of the major part of unwanted bunches;
- Chopper in LEBT at low energy may provide “rough chopping”;
- Option: chopper between the RFQ buncher and RFQ accelerator that allows longer kicker voltage rise time for the bunched beam (up to 3 nsec);
- Final chopping after RFQ to clean the gaps between the bunches.

Concept for 2 GeV CW Linac (ICD-2):

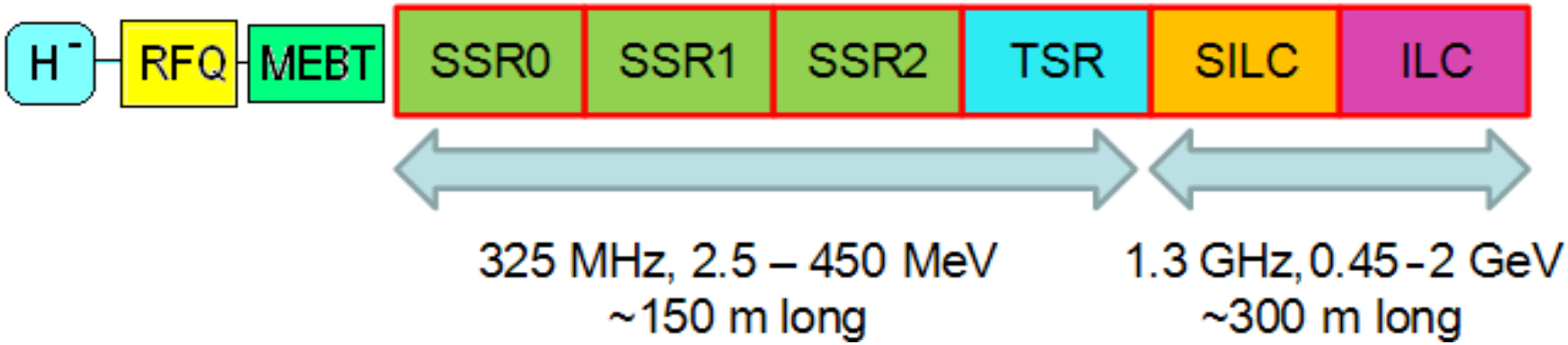

Major features of the linac:

- SC Linac is divided by two parts:
  - 325 MHz: Four families of spoke cavities: SSR0, SSR1, SSR2, TSR
  - 1.3 GHz: Two families of elliptical cavities: SILC (β=0.81), ILC ((β=1)
- Constrains: cryogenic and RF CW power
- Focusing by SC solenoids (up-to ~100 MeV) and FODO (0.1-2GeV)
- Individual RF sources for each cavity
- Cryomodules is assembled in string ~(8-10) CM's
- Warm sections between cryo-strings (diagnostics, etc.)
- Spare cryomodules

Breaking points between sections

Section	Energy MeV	β range	#cavities/ lenses/CM	Type of cavities and focusing	End Z m	Power/ cav, kW
MEBT	2.5	0.073	2 / 3 / 2	SSR, Solenoid	2.75	0.5
SSR0 (β_G=0.11)	2.5-10	0.073-0.146	16/16/2	Single spoke cavity, Solenoid	11.9	0.5
SSR1 (β_G=0.22)	10-32	0.146-0.261	18/18/2	Single spoke cavity, Solenoid	26.4	1.3
SSR2 (β_G=0.4)	32-117	0.261-0.5	33/17/3	Single spoke cavity, Solenoid	55	4.1
TSR (β_G=0.6)	117-466	0.5-0.744	48/48/8	Triple spoke cavity, quads	148	8.5
S-ILC(β_G=0.81)	466-1200	0.744-0.9	66 / 42/ 11	11-cell Squeezed ILC	280	13
ILC (β_G=1)	1200-2000	0.9-0.95	68 / 13 / 9	9-cell ILC	~400	15

Drifts: SSR0-SSR1 ~ 40 cm. SSR2- TSR ~70 cm, TSR-SILC ~5m, SILC-ILC ~10m.

Parameters of the SC cavities

325 MHz spoke cavities

Cavity type	E_{acc} [MV/m]	L_{eff} mm	Ep/E_{acc}	B_p/E_{acc} mT/(MV/m)	R/Q Ω	G Ω	$Q_{0,2K}$ $\times 10^9$	$Q_{0,4K}$ $\times 10^9$	P_{2K} [W]	P_{4K} [W]
SSR0	8.7	72	4.1	4.6	120	57	9.5	0.7	0.34	4.67
SSR1	10.8	135	2.62	3.87	242	84	14.0	1.0	0.63	8.78
SSR2	13.6	246	2.42	3.95	322	112	18.0	1.3	1.93	26.74
TSR	9.75	943	3.22	6.85	554	117	19.0	1.4	8.03	109

1300 MHz elliptical cavities

Cavity type	E_{acc} [MV/m]	L_{eff}, mm	Ep/E_{acc}	B_p/E_{acc} mT/(MV/m)	R/Q Ω	G Ω	$Q_{0,2K}$ $\times 10^9$	P_{2K} [W]
11-cell, β=0.81	16.4	1028	2.41	5	750	228	12.7	29.92
9-cell, ILC	18	1038	2	4.26	1036	270	15.0	22.46

Gradient is moderate, limited mostly by cryogenic constrains, available RF power sources, power couplers

SSR0 β=0.117

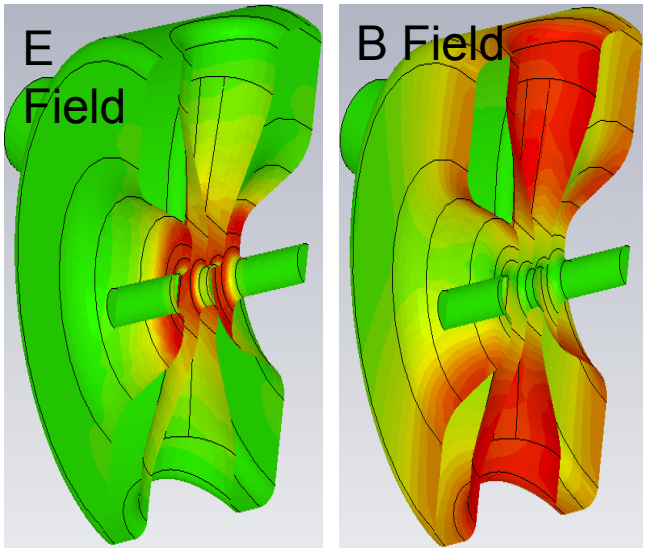

F(MHz)	325
$\beta_{optimal}$	0.117
Diameter, mm	200
D_{eff} = (2*βλ/2),mm	108
R/Q, Ω	120
TTF, Average	0.94
$(E_{max}/E_{acc}) / (E_{max}/E_{acc*})$	5.5/5.85
$(H_{max}/E_{acc}) / (H_{max}/E_{acc*})$ **(mT/MV/m)**	6.5/6.9

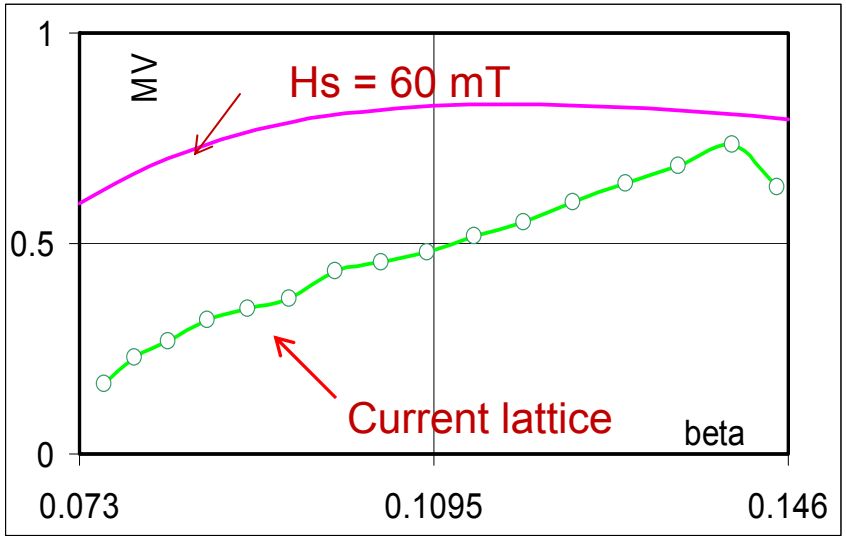

Energy gain per cavity vs. beta

$E_{acc*}=E_{acc}(\beta_{optimal})$* TTF, Average

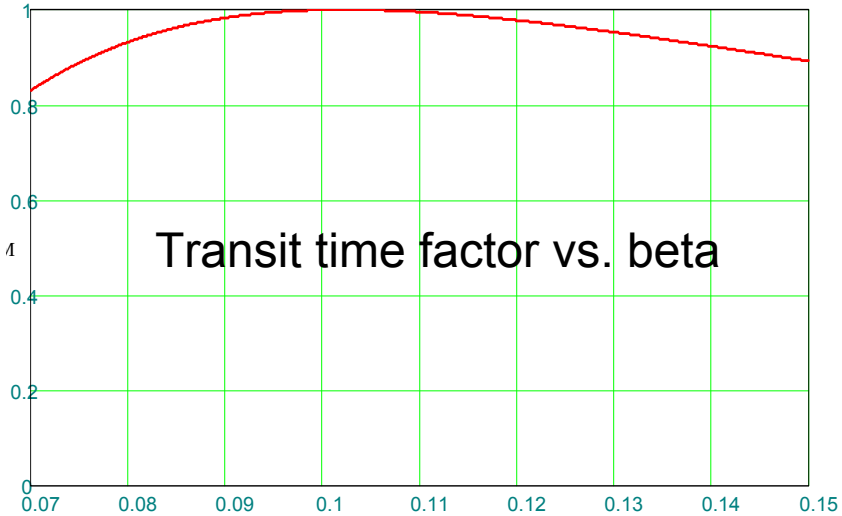

Other families of 325 MHz spoke resonators

SSR1 β=0.22

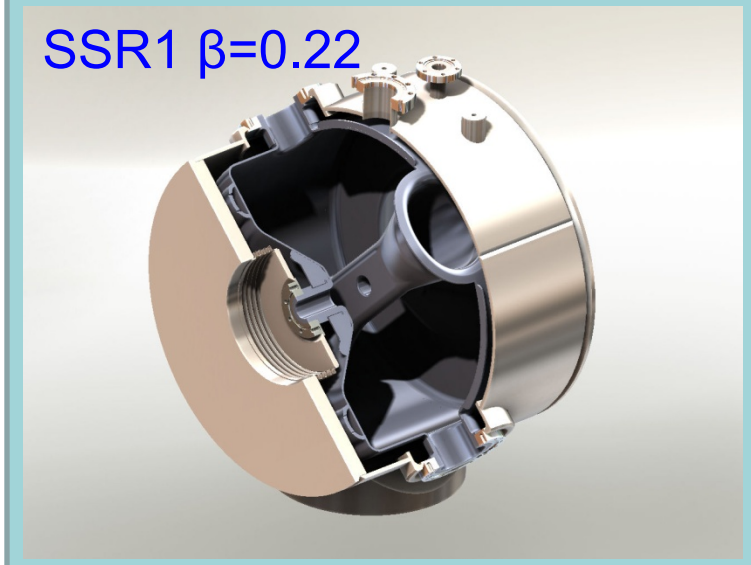

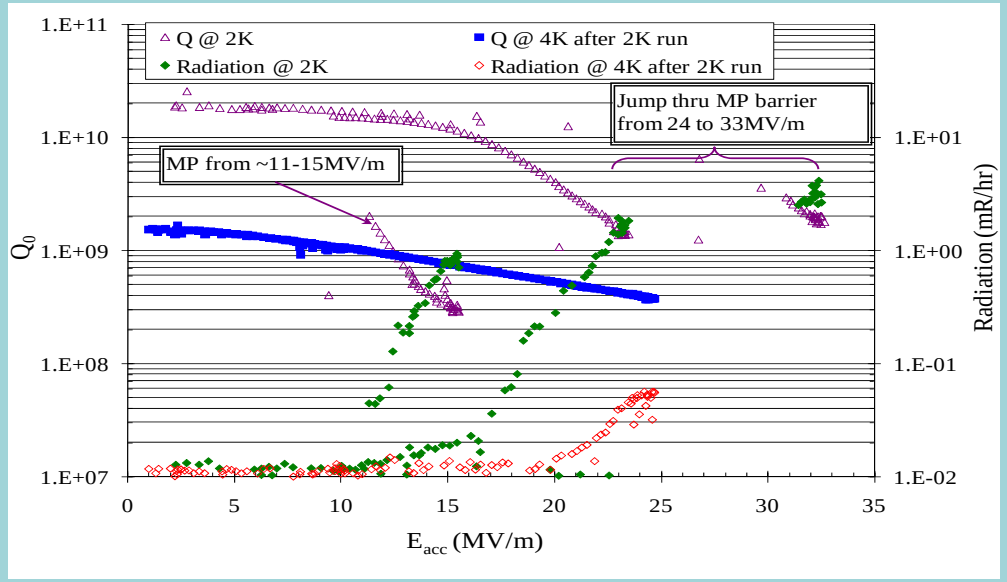

Status: Designed, built and 2 prototypes were tested (25MV/m @4K, 33MV/m@2K)

SSR2 β=0.4

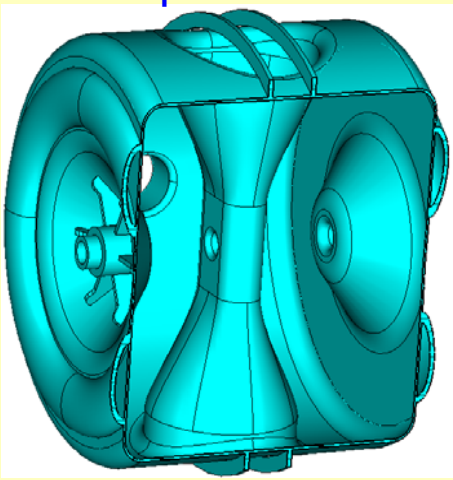

RF design, Mechanical design

TSR β=0.4

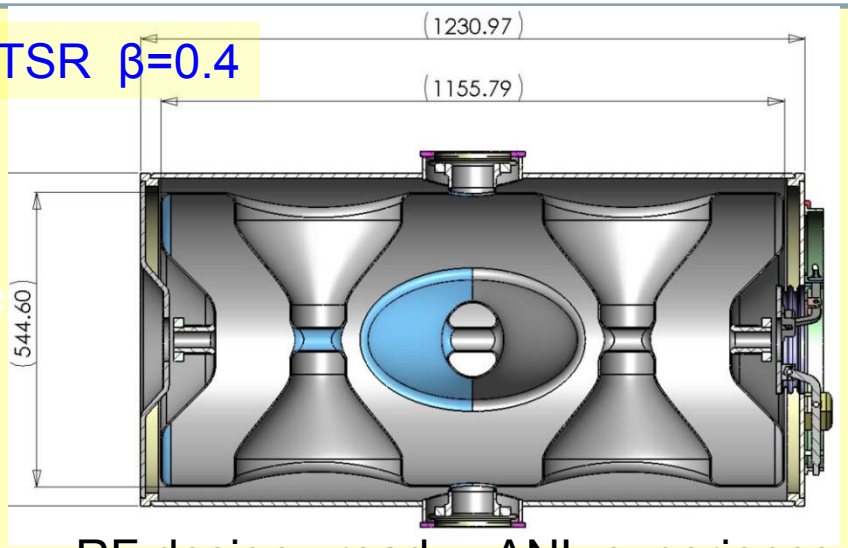

RF design –ready, ANL experience

7-cell β=0.81 MSU cavity

(W. Hartung et al, SRF2007,TUP55)

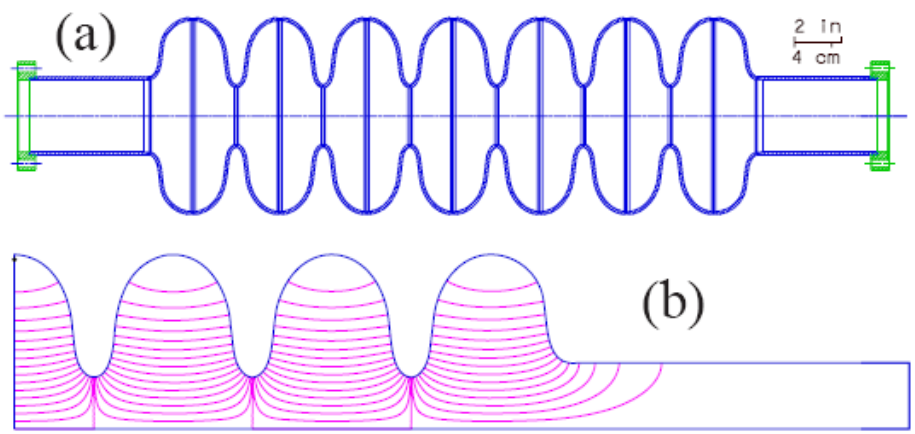

(a) Drawing of 7-cell $\beta = 0.81$ Proton Driver cavity (blue = Nb; green = Nb-Ti). (b) Electric field lines for the right half of the cavity.

Cavity	TTF 9-cell	SNS 6-cell	Proton Driver 7-cell	Proton Driver 1-cell
geometrical β	1	0.81	0.81	0.81
wall inclination	13.3°	7°	7°	7°
E_p/E_a	2.0	2.19	2.19	2.18
cB_p/E_a	1.28	1.44	1.41	1.58
cell-to-cell coupling	1.8%	1.5%	1.6%	-
R/Q per cell	115 Ω	80.8 Ω	79.1 Ω	62.3 Ω
Geometry factor	270 Ω	233 Ω	227 Ω	229 Ω

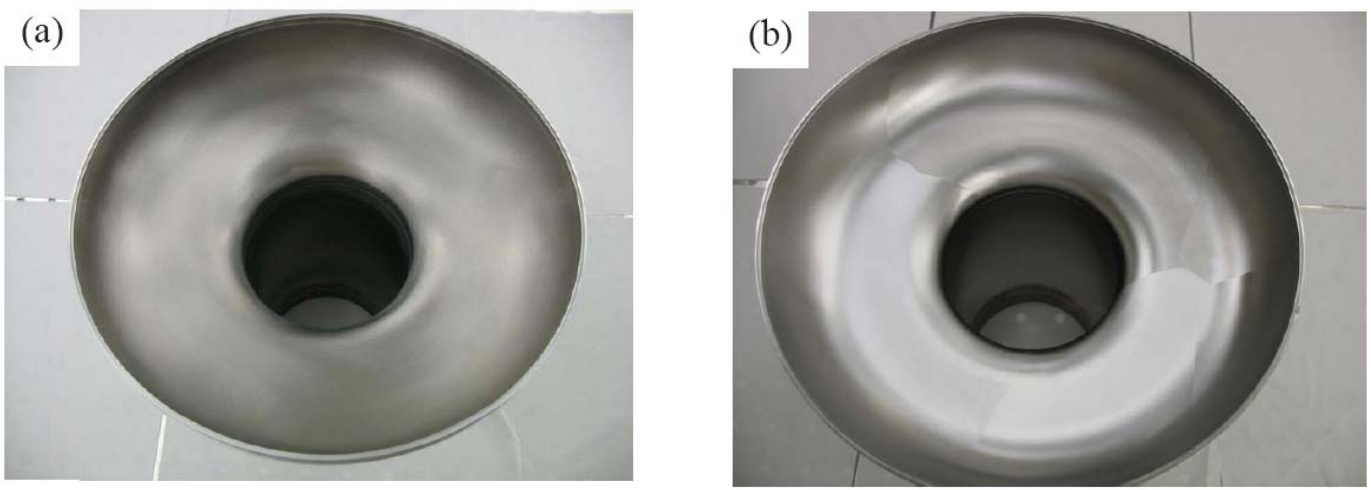

(a) Fine grain and (b) large grain half-cells after the iris weld.

7-cells cavities ready for tests

Completed fine grain (top) and large grain (bottom) 7-cell cavities

Single cell test results

RF test results at 2 K for (a) the first and (b) the second large grain cavities.

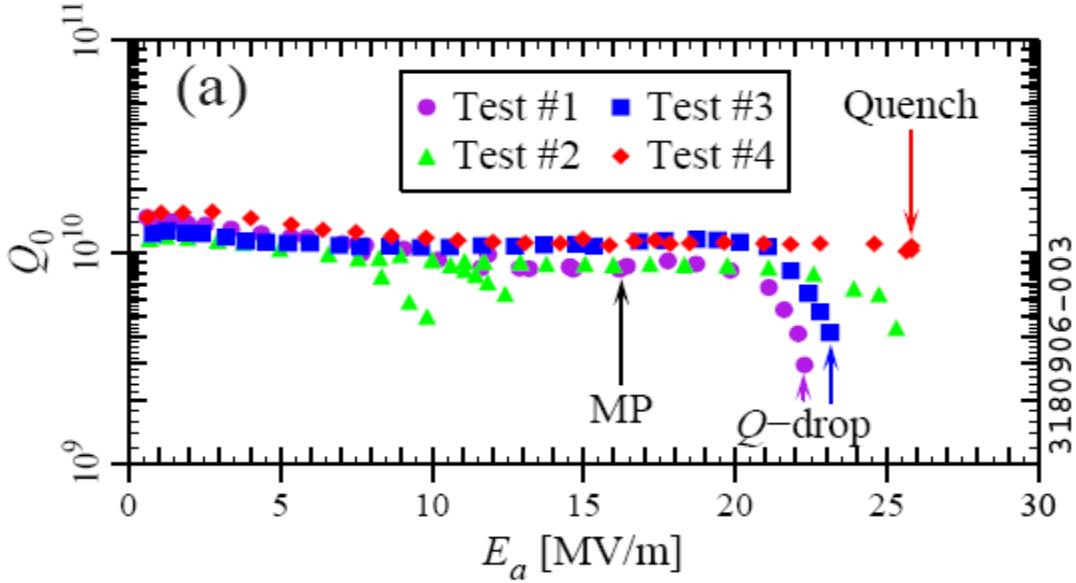

Plans to test MSU 7-cell cavities is at FNAL this year

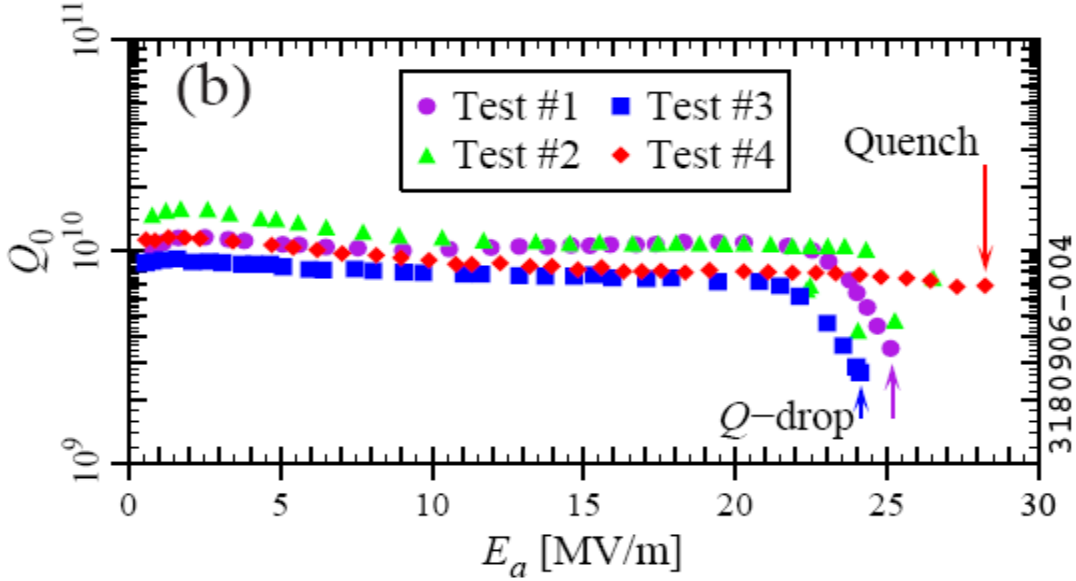

Squeezed ILC 11-cell cavity

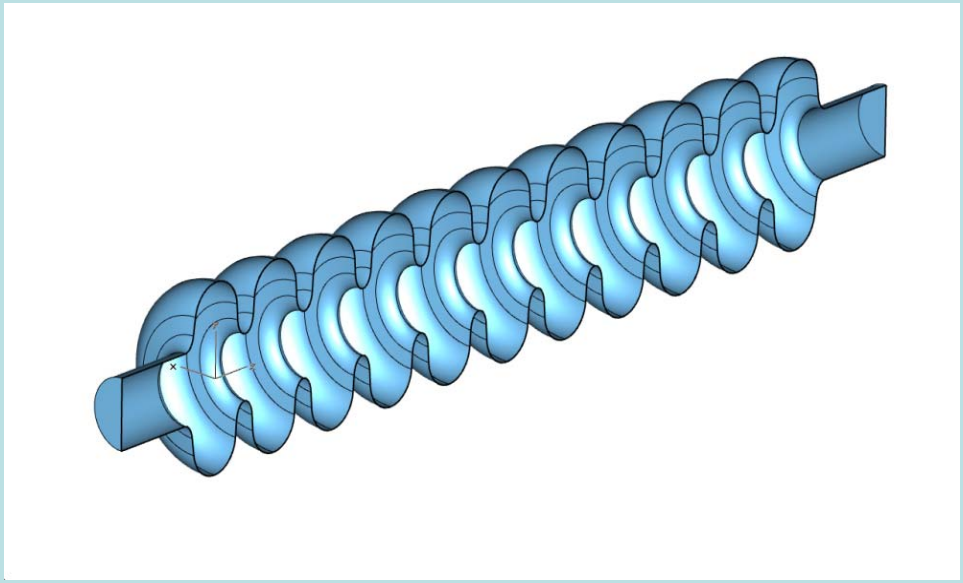

Optimized mid-cell geometry

k_c	2.47 %
r/Q	750 OHm
G	228 OHm
E_{pk}/E_{acc}	2.41
H_{pk}/E_{acc}	5.0 mT/(MeV/m)
K_L	0.43 Hz/(MeV/m)

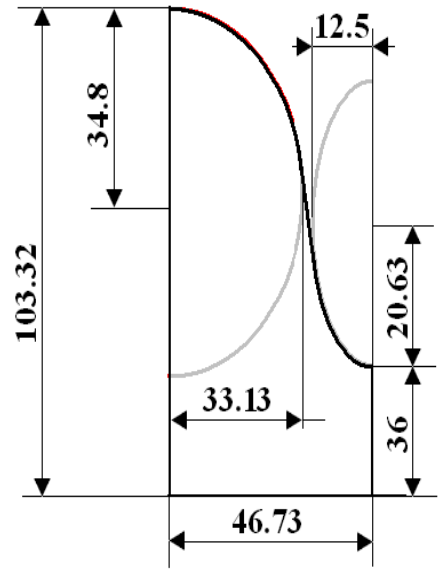

Design constrains and advantages:

- Large cell-to-cell coupling to provide the same field flatness requirements, as ILC cavity
- Cavity length is close to ILC cavity (~2mm difference)
  - Same helium vessel and frequency tuners, coupler, HOMs
  - Fit space in Type-4 cryomodule, same tooling
  - High energy gain per cavity ➔ less number of cavities and CM are required

Collaboration with India to design and built cavity

Squeezed cavity: Number of cells?

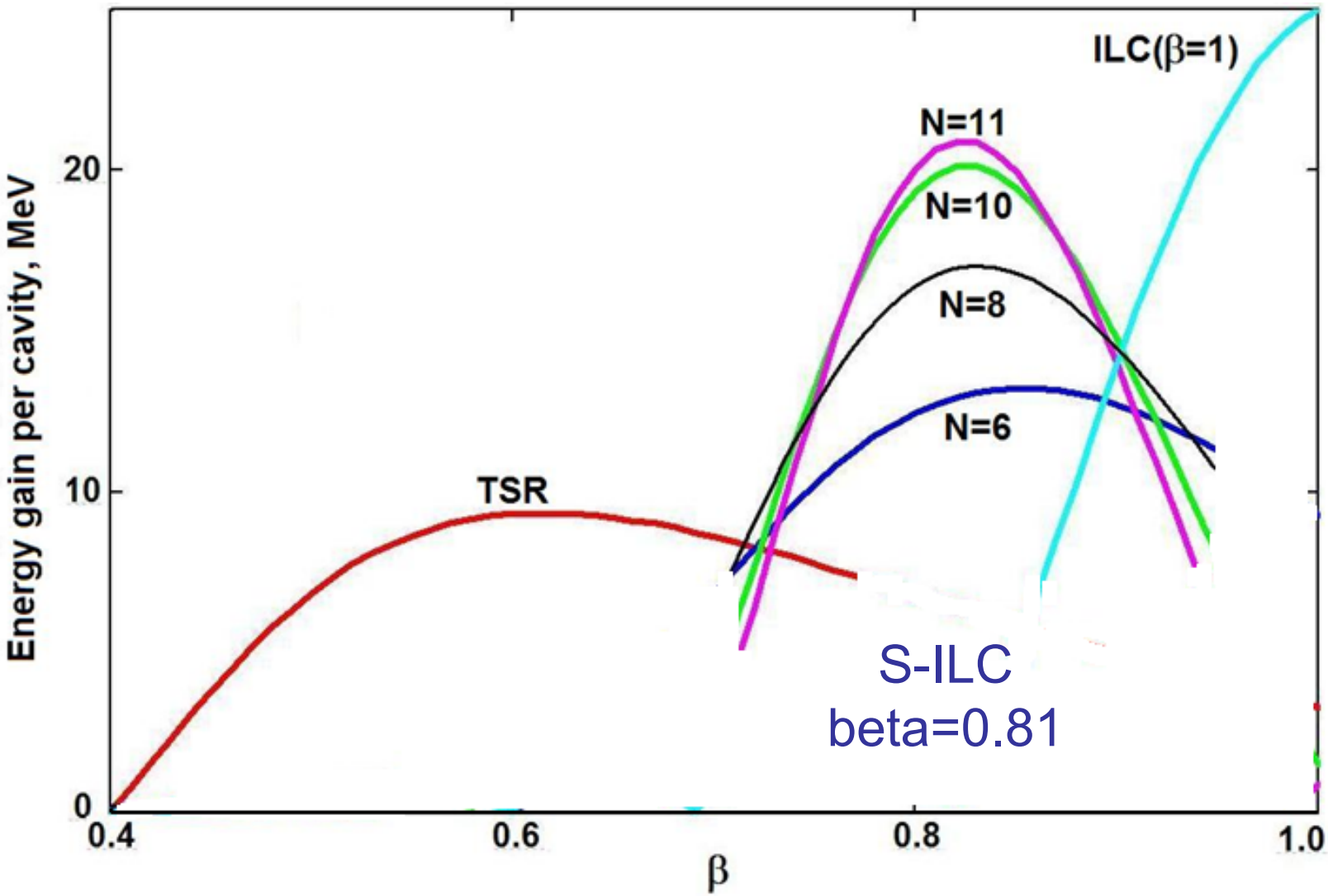

ILC cavity

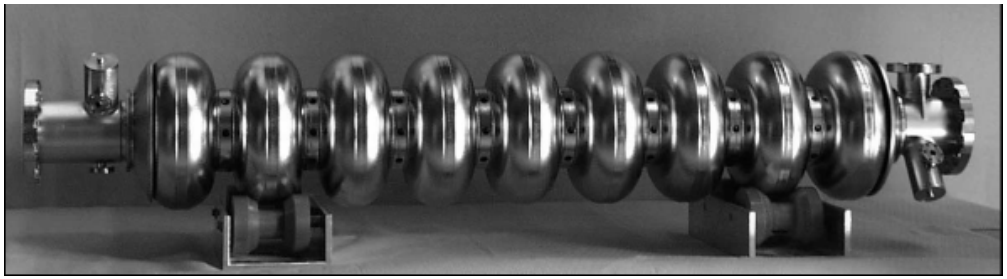

CW regime
Gradient = 16 – 18 MeV/m
Q = 1.5 *10^{10}
P cryo = 18 – 22.5 W

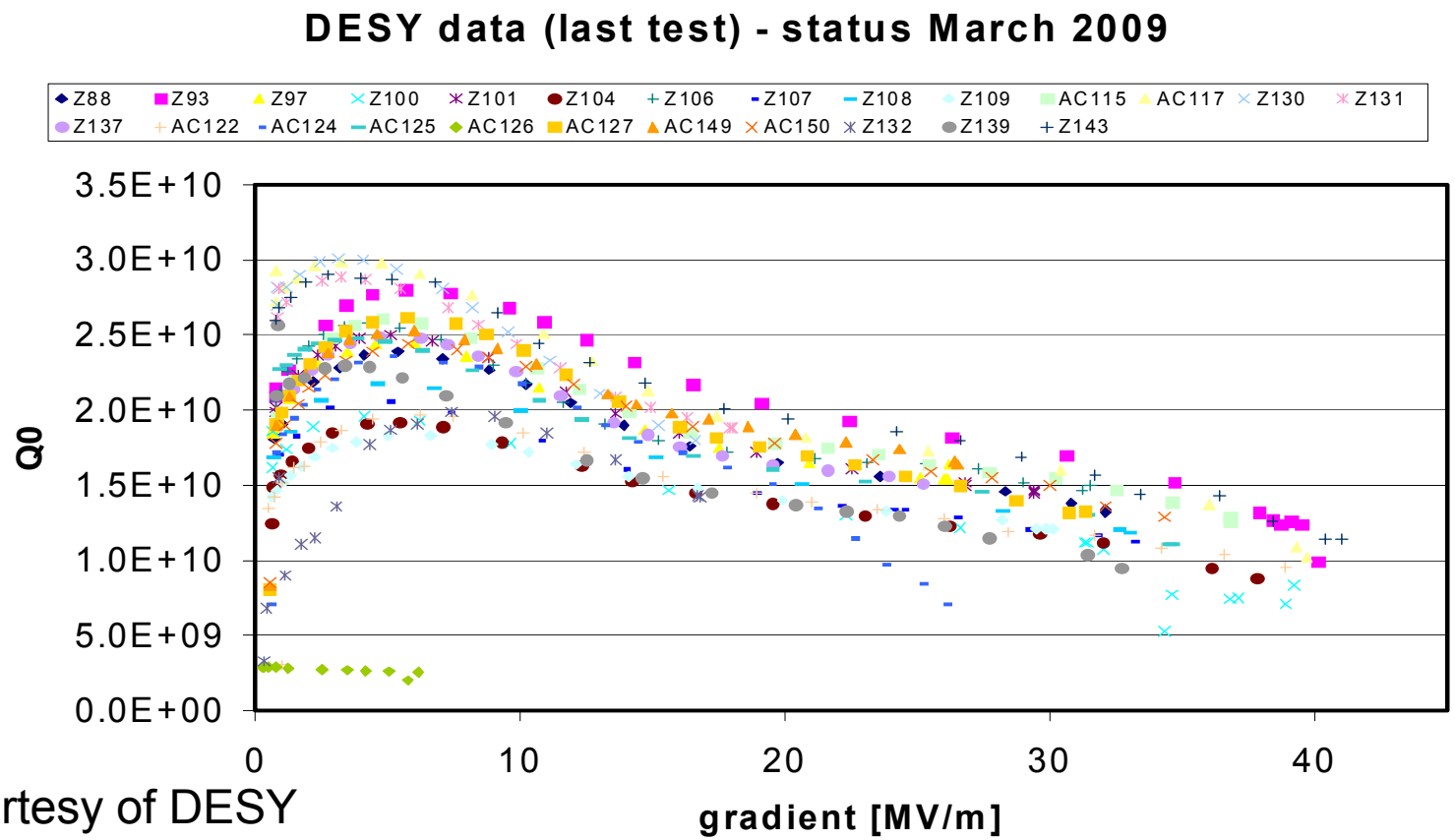

Courtesy of DESY

Cavity gain and phase profile

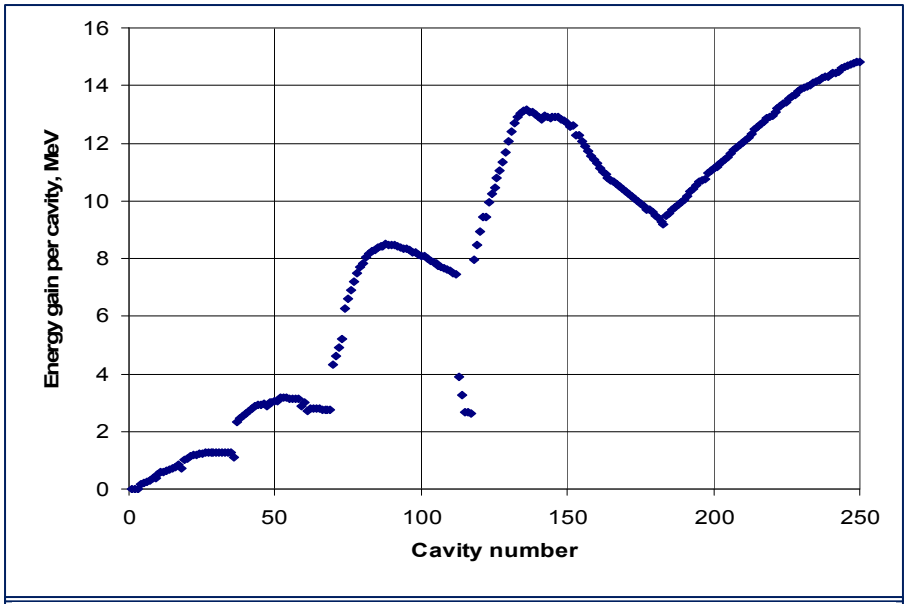

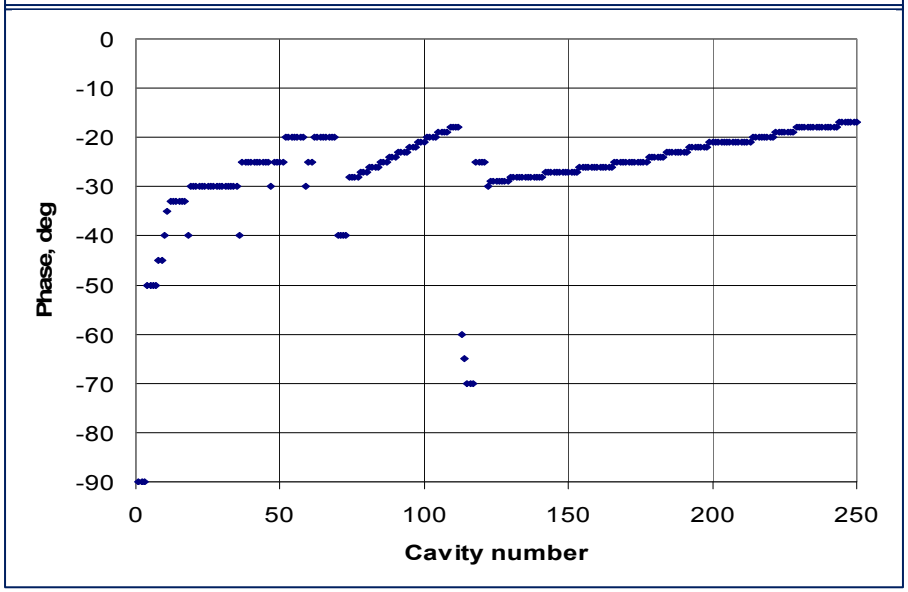

The energy gain per cavity (top) and equilibrium phases (bottom).

325 MHz: cavities #1-#117

1.3 GHz: cavities #118-251

•Few cavities at the end of 325 MHz section have large (60-70°) equilibrium phase in order to match the beam longitudinal dynamics to the 1.3 GHz section.

Magnetic Focusing

Section	SSR-0	SSR-1	SSR-2	TSR	S-ILC	ILC
Focusing	SR	SR	SR^2	FRDR	FR^2DR^2	FR^5DR^5

Table III-1. The linac focusing lattice: S – solenoid, R resonator, F and D - quadrupoles.

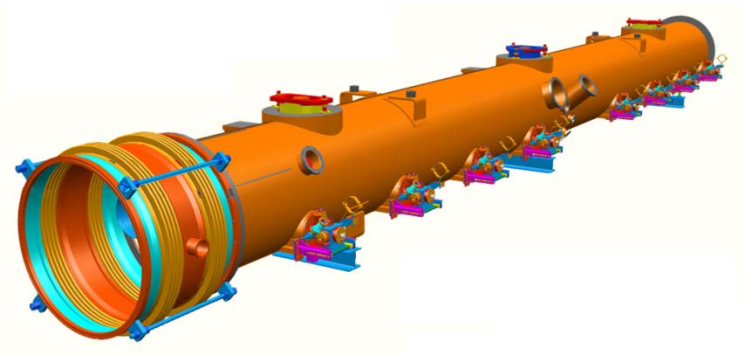

- Standard ILC Type 4 cryomodule with additional ports for magnet leads in slots 2,5,8.
- Slots can be used for installation of cavity or quadrupole.

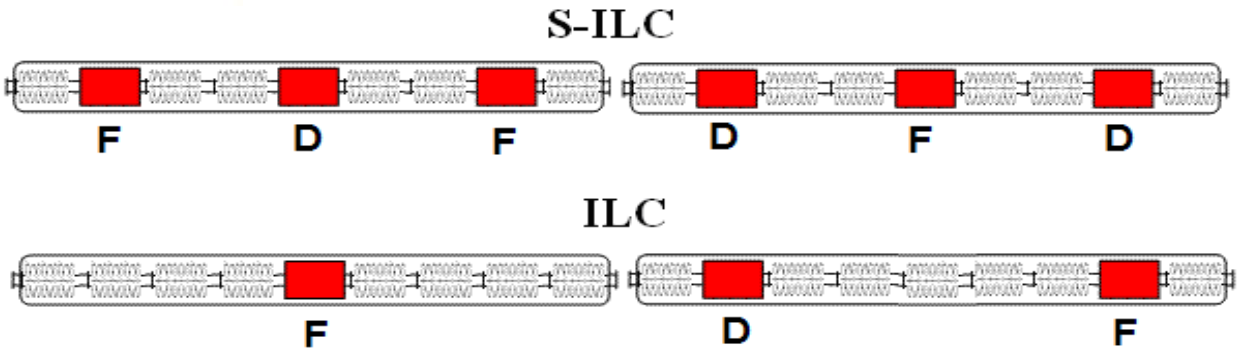

TTF3 RF POWER COUPLER THERMAL CALCULATIONS FOR AVERAGE POWER 15 kW

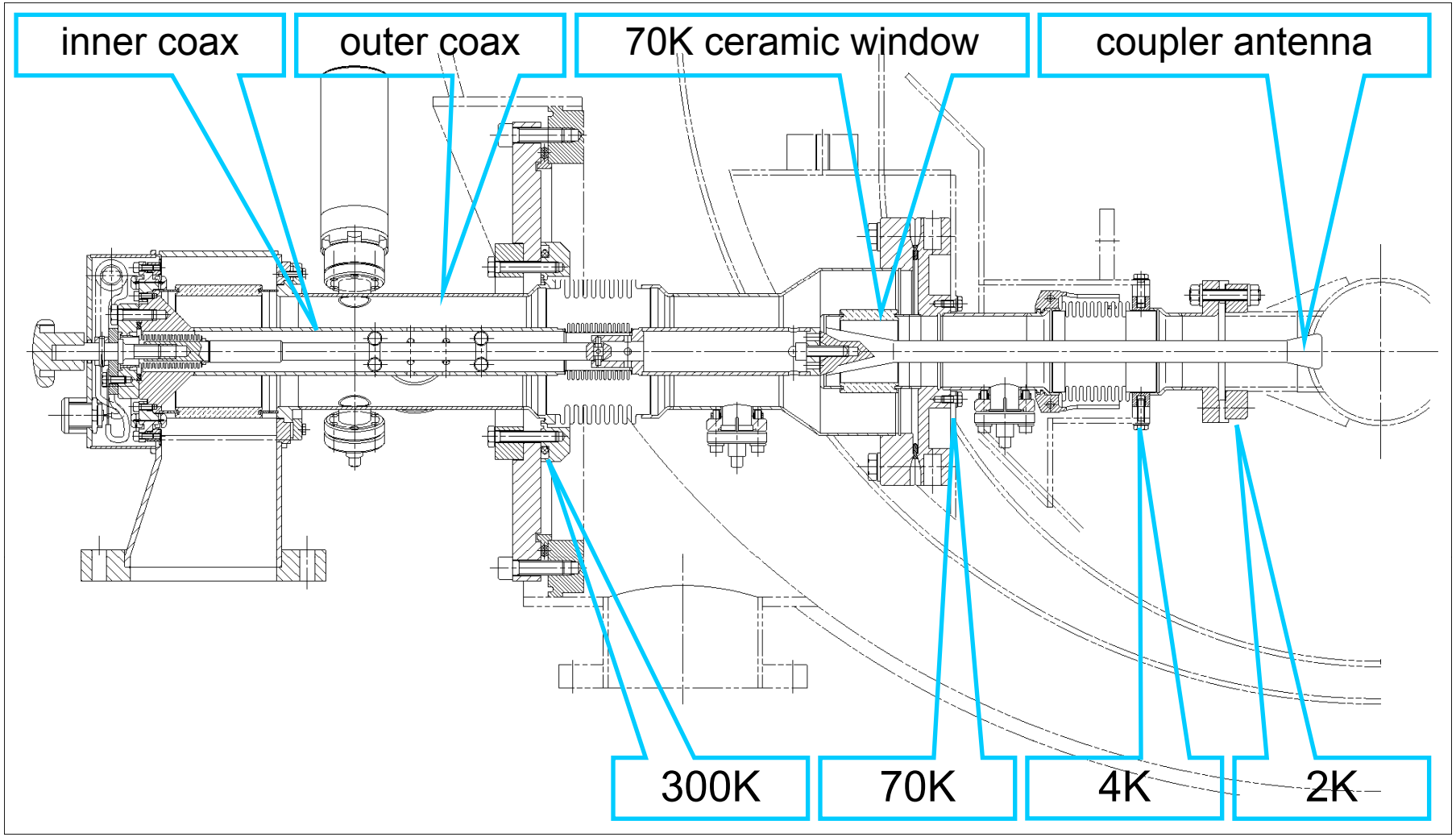

Inner conductor Temperature distribution for different thickness of copper coating

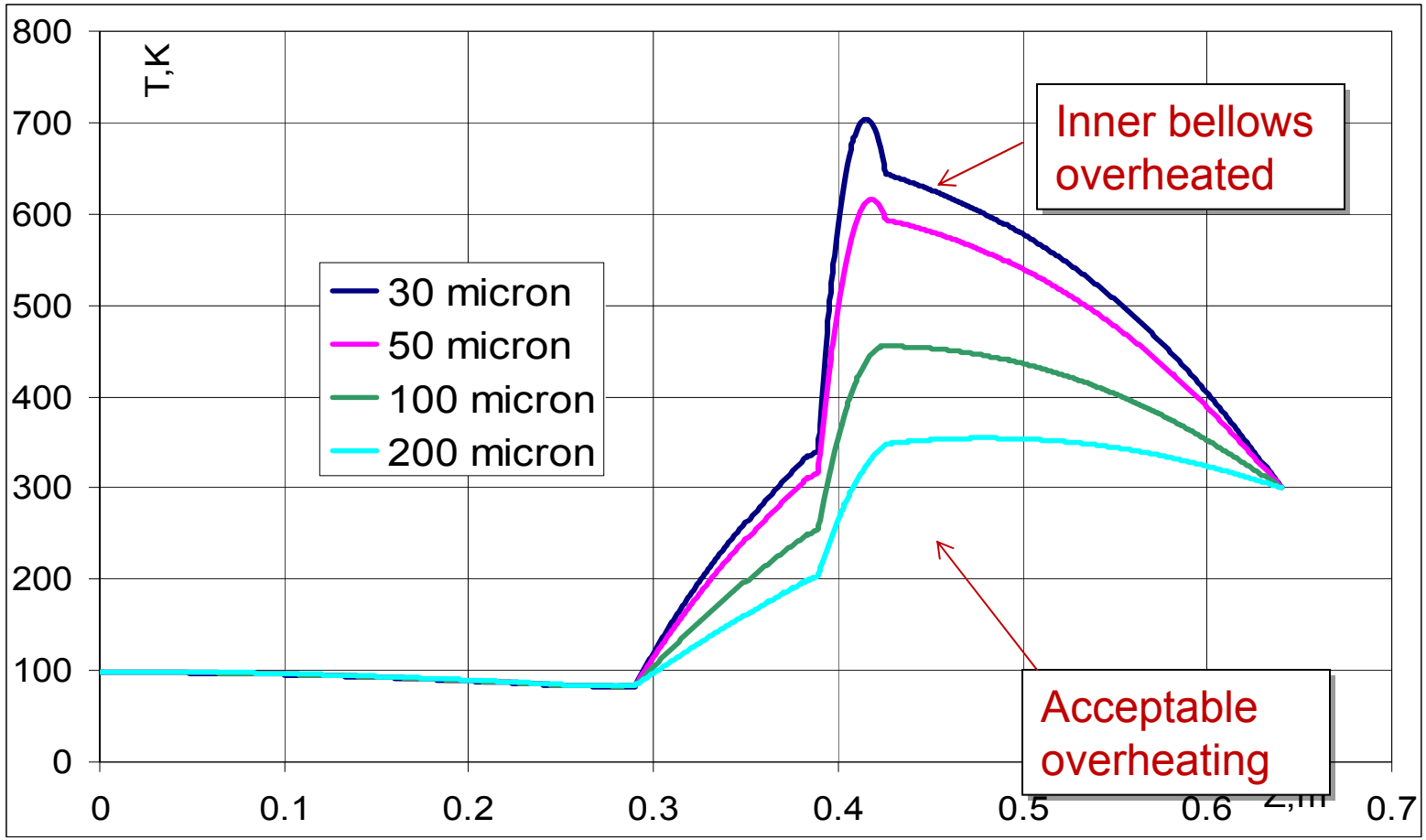

Cryogenic Power Losses (static and dynamic) for different thickness of copper coating and RRR @ 15 kW average power

Cu coating (microns)		RRR of Cu	case	P [W]	P [W]	P_{in}	P_{out}	P_{win}	P_{total}	P_{total} [W]	T_{max} K
In	Out			2K	4K	70K				(2+40+70)K	(inner bellow)
30	10	10	Static	0.02	0.2	0.85	1.06	0	1.91	2.13	
30			Dynamic	0.15	0.97	15.9	5.1	2.9	23.9	25.02	703
50			Static	0.02	0.2	1.2	1.06	0	2.26	2.48	
50			Dynamic	0.15	0.97	16.5	5.1	2.9	24.5	25.62	616
100			Static	0.02	0.2	1.95	1.06	0	3.01	3.23	
100			Dynamic	0.15	0.97	16.7	5.1	2.9	24.7	25.82	455
200			Static	0.02	0.2	3.4	1.06	0	4.46	4.68	
200			Dynamic	0.15	0.97	17.2	5.1	2.9	25.2	26.32	355
30		100	Static	0.095	0.5	0.88	0.73	0	1.61	3.06	
30			Dynamic	0.143	0.85	14.8	4.57	2.9	22.27	23.3	570
50			Static	0.095	0.5	1.24	0.73	0	1.97	3.42	
50			Dynamic	0.143	0.85	15.3	4.57	2.9	22.77	23.8	496
100			Static	0.095	0.5	2.05	0.73	0	2.78	4.23	
100			Dynamic	0.143	0.85	16.4	4.57	2.9	23.87	24.9	415
200			Static	0.095	0.5	3.54	0.73	0	4.27	5.72	
200			Dynamic	0.143	0.85	17.9	4.57	2.9	25.37	26.4	345

Cryogenic losses are dominated by dynamic losses, not static

325 MHz Sections:

SSR0 section (1 or 2 CM's)

SSR1 section (2 Cryomodules):

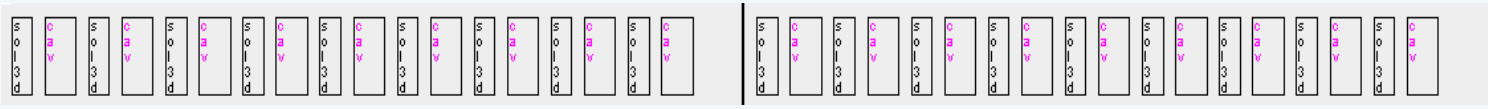

SSR2 section (3 Cryomodules):

TSR section (8 Cryomodules with):

Extra quad between SSR2 and TSR sections (warm section with diagnostics) ?

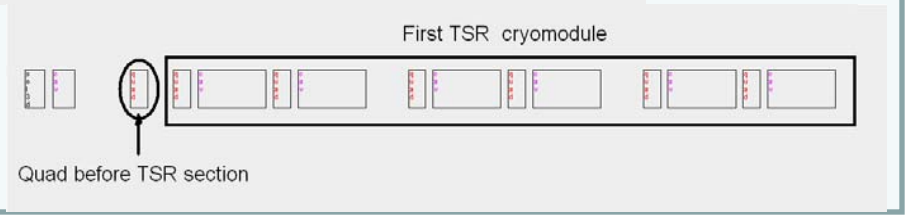

Concepts for cryomodule design

1. SSR1 cryostat design

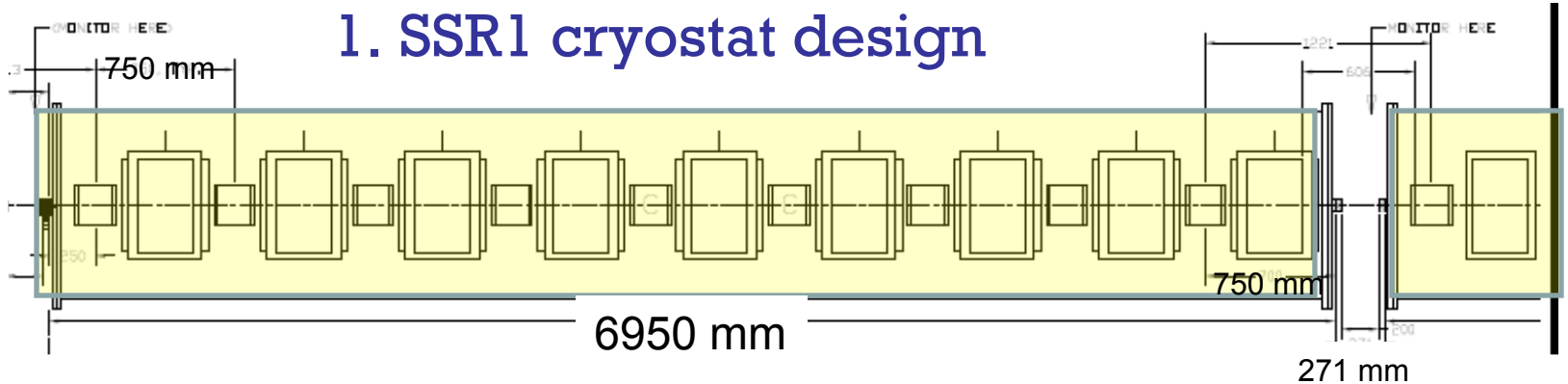

No designs for SSR0, SSR2, TSR cryostats

ILC Type-4 cryomodule with small modifications

for S-ILC and ILC sections

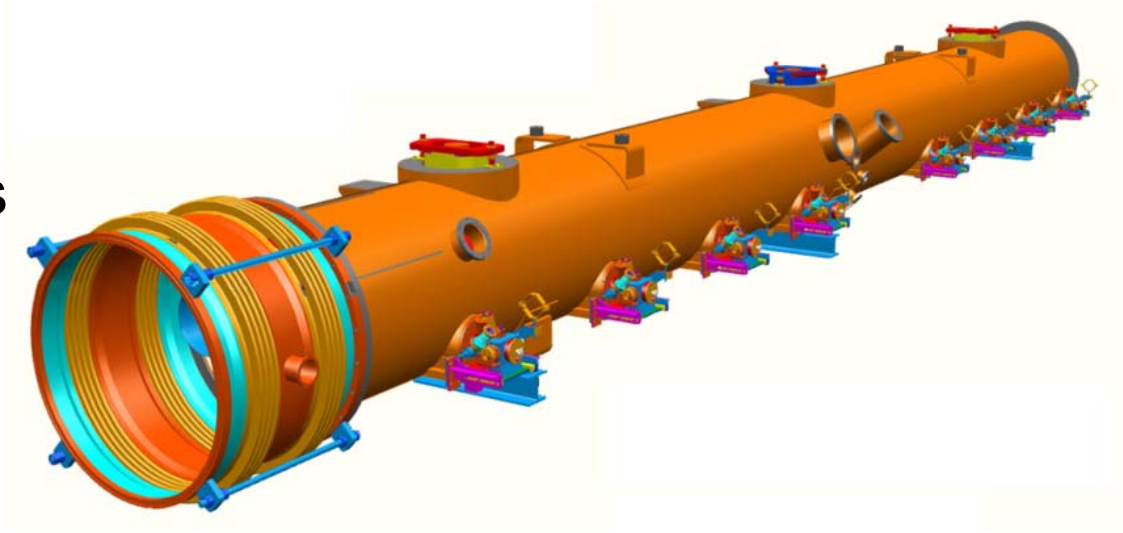

Lattice Design (ICD-1)

For ICD-1 lattice (8GeV, 20 mA) we are using lattice, developed for 45 mA version of Project X by P.Ostroumov with some modifications. The major modification are the following:

- MEBT:
  - Extra space in MEBT for beam diagnostics (profile monitors, current monitor)
  - Longer space for chopper and beam dump
- 1.3 GHz sections:
  - Use Type-4 cryostat for S-ILC cavities with 1Q/2cavities
  - 11-cell beta=0.81 cavity instead of 8-cell cavity
  - Gradient reduced to 19.6 MV/m in S-ILC and 25 MV/m in ILC cavity
  - Warm sections in between TSR, S-ILC, ILC-1 and ILC-2 sections

Few other options was also studied, for example focusing by doublet in S-ILC section

Lattice in ICD-2

- 16 Room Temperature CH cavities (9 families) are replaced by 16 SSR0 - single spoke resonators (one family, beta=0.117). Possible to reduce number of cavities (10-12).
- Gradient in S-ILC and ILC cavities are reduced to 16-18 MeV/m
- No ILC-2 section required for E=2 GeV
- Extra-spacing between sections for diagnostics and MPS(?)
- Other possible modifications under discussion.

325 MHz: Beam Envelopes (X/Y and Z)

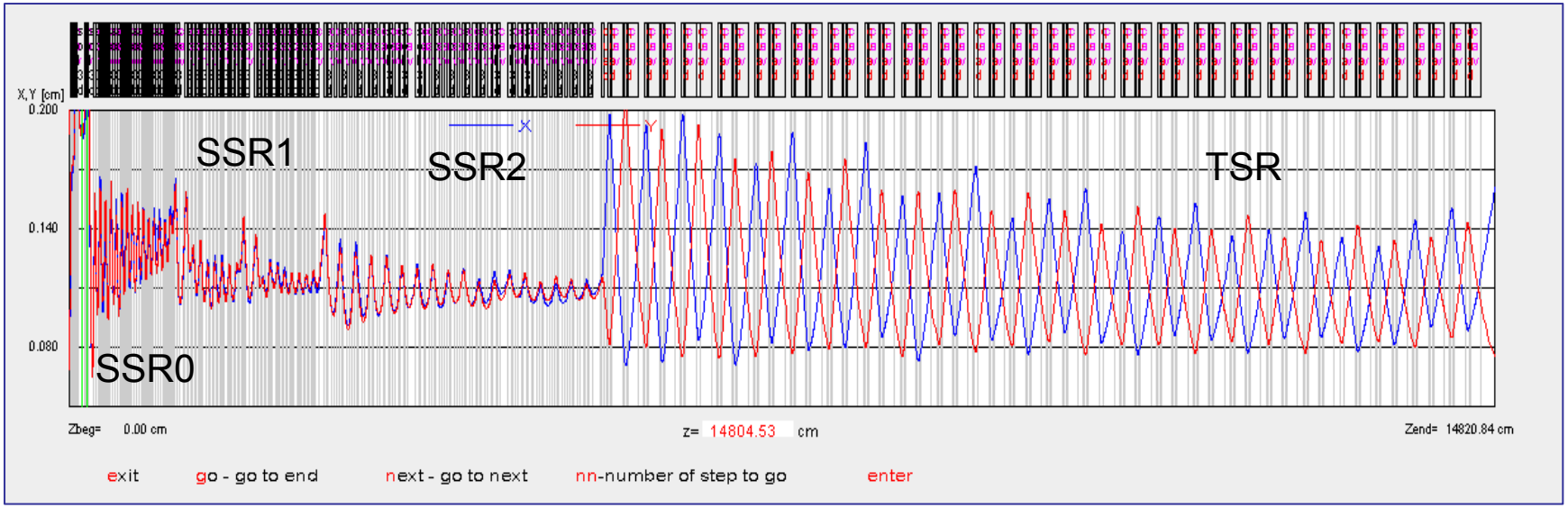

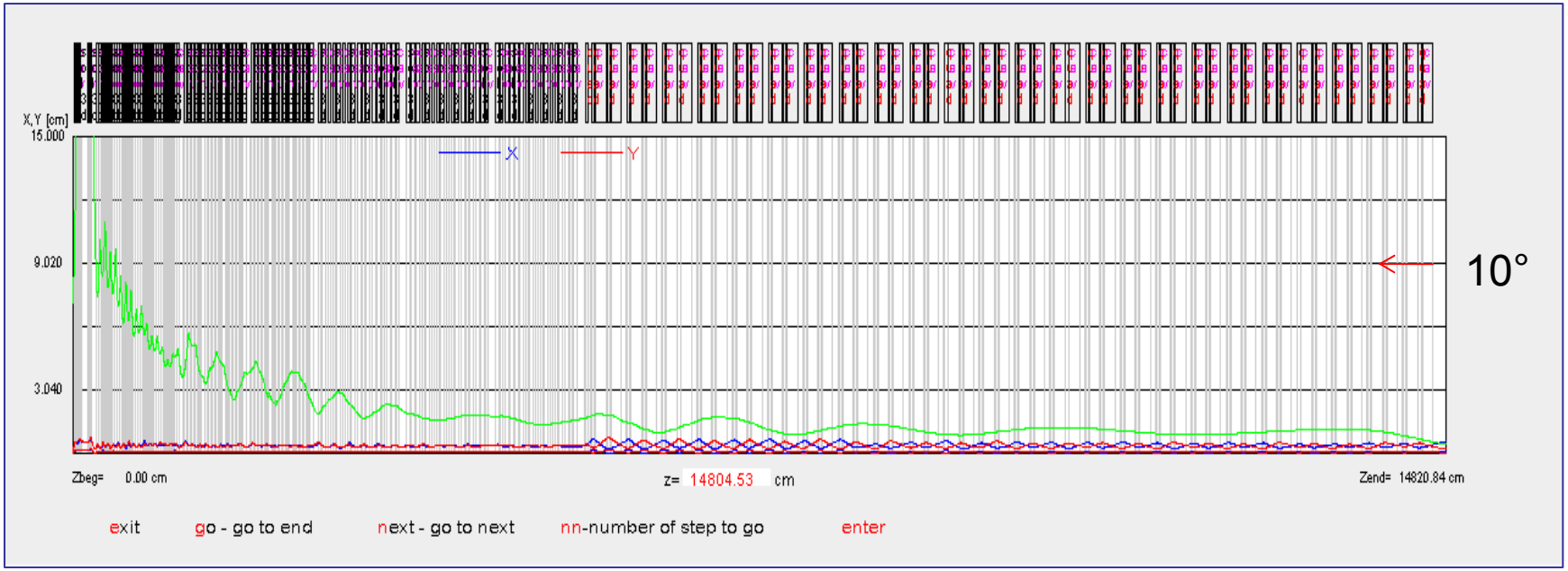

RMS Emittances (325 MHz).

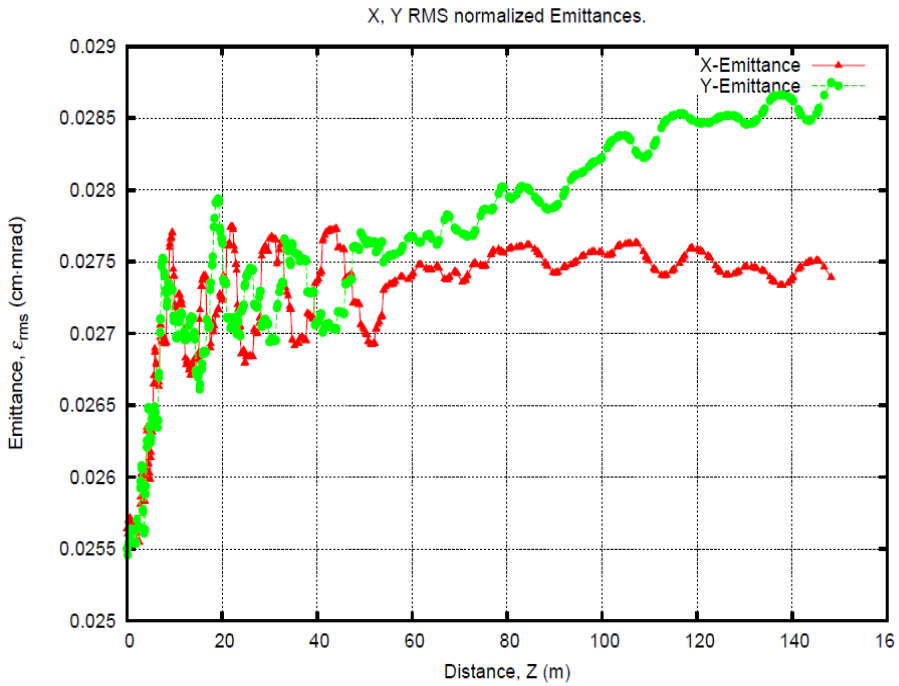

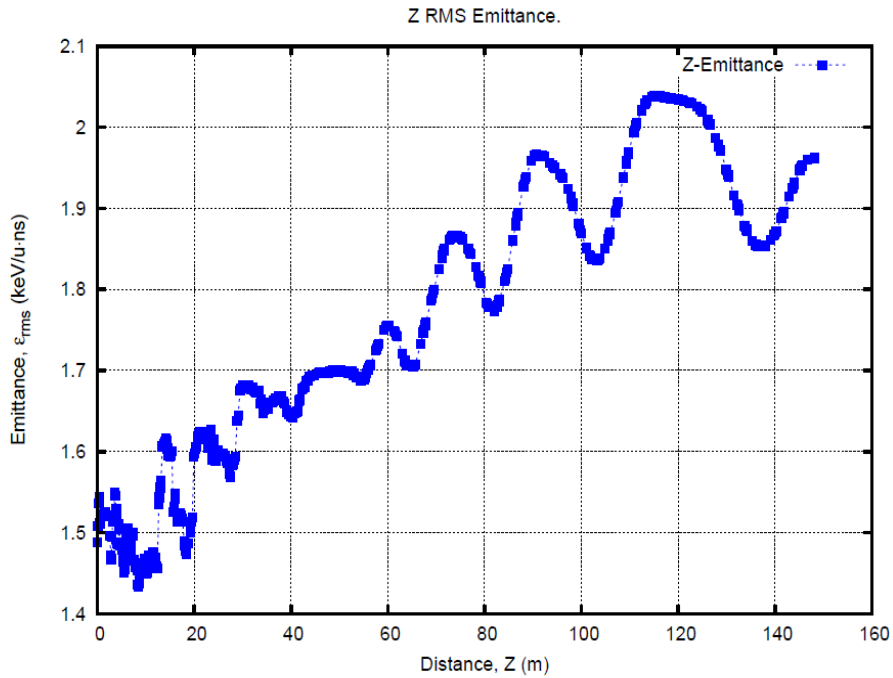

Phase advance per focusing period.

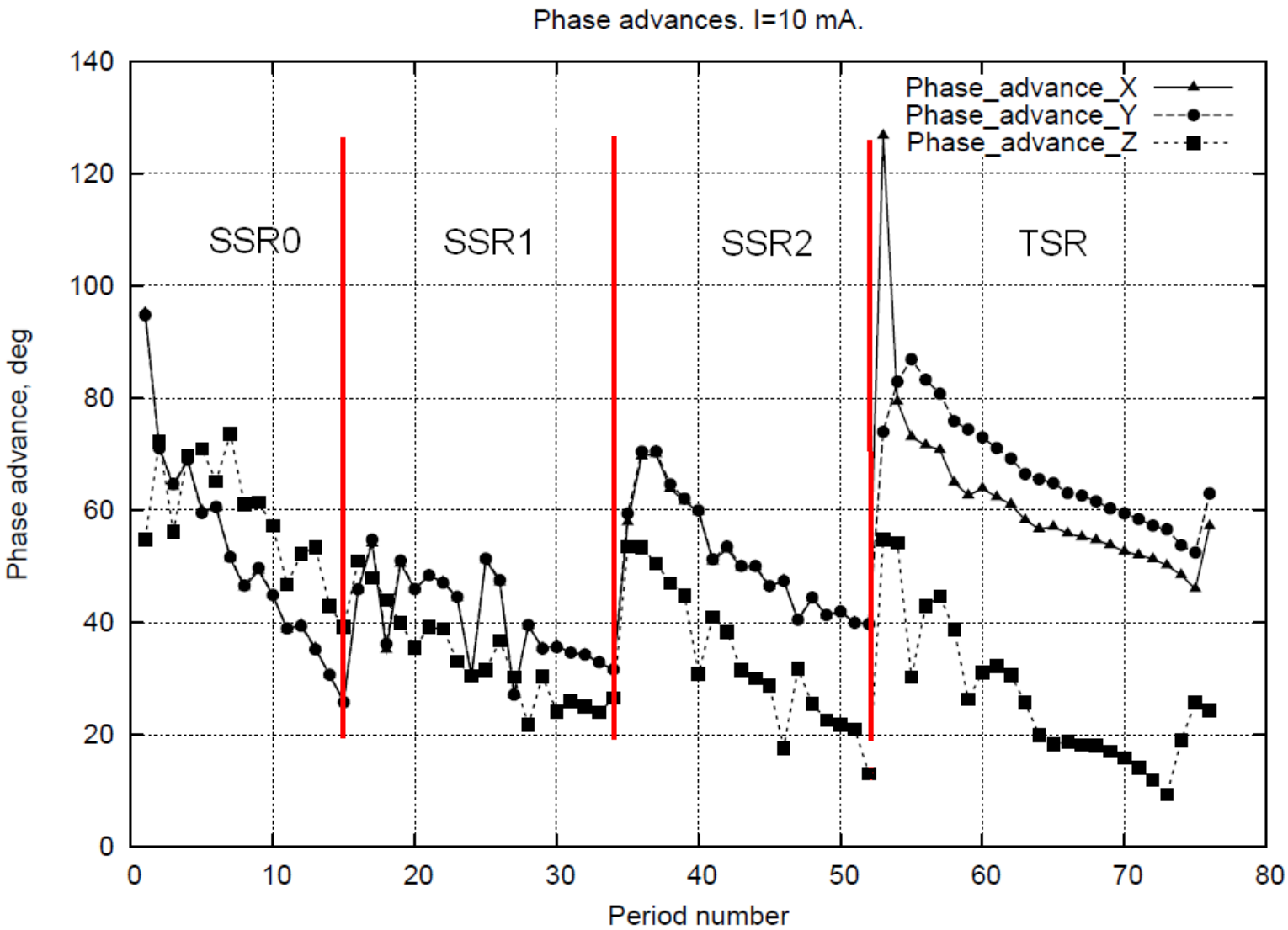

Solenoids, Quads, Cavities.

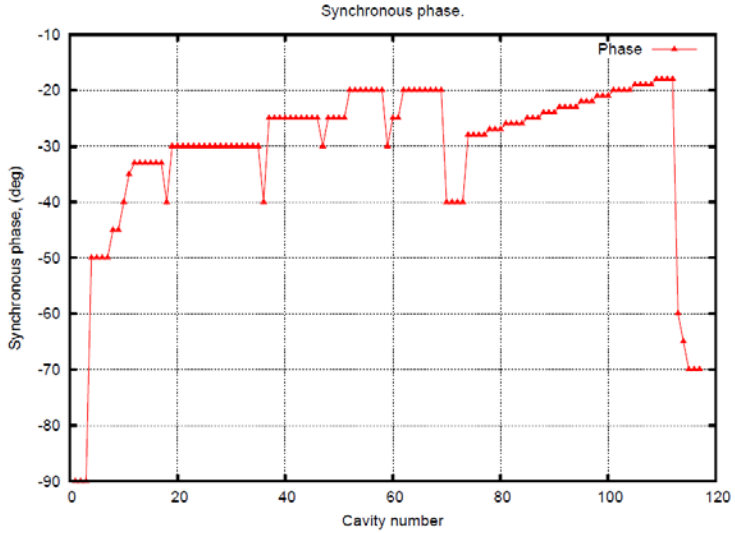

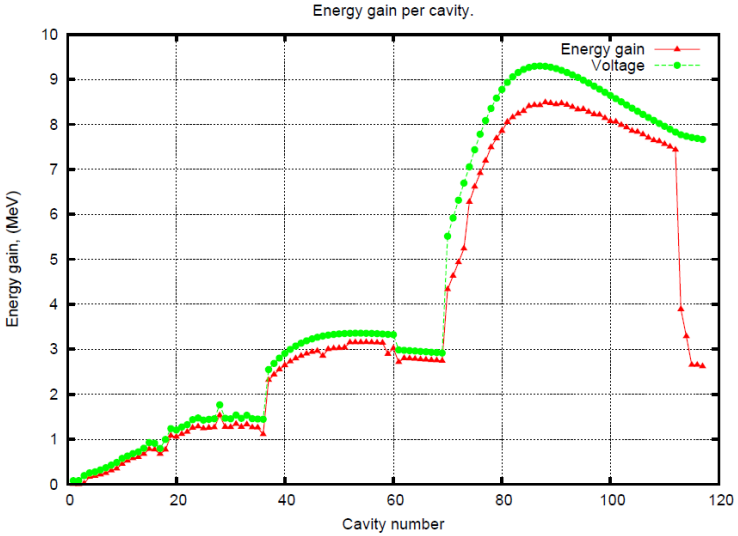

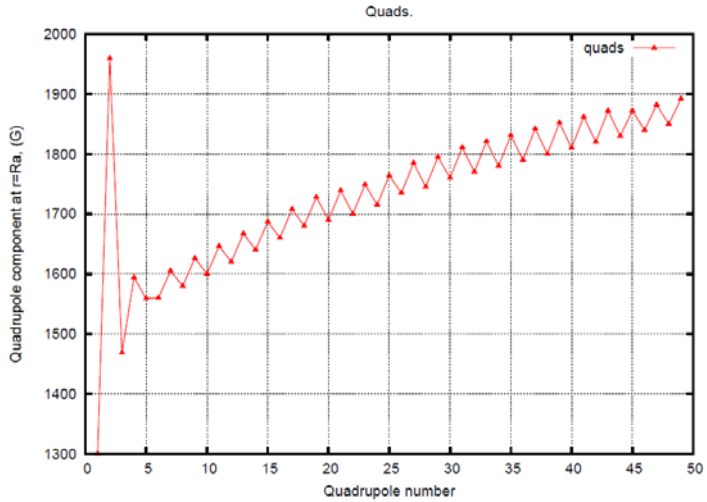

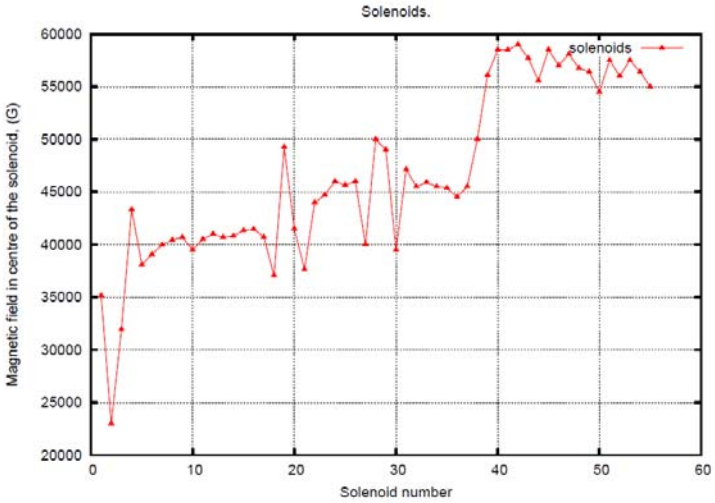

1.3 GHz: Matching S-ILC and ILC sections

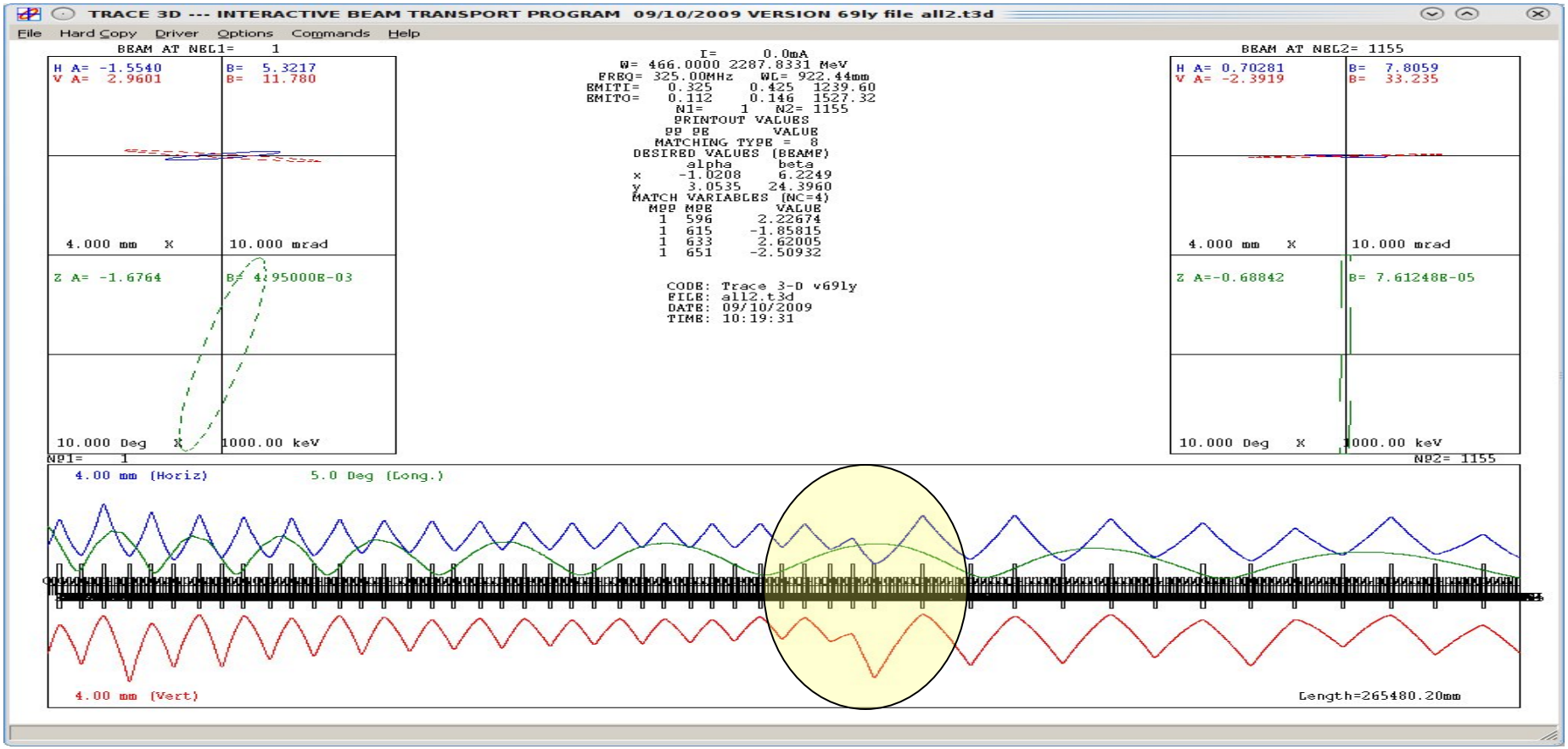

- This particular match was obtained by using the last 4 quads of the S-ILC section. The transition is not optimal (preliminary results).
- Perturbation of regularity: Large effect of cavity focusing (varies along the section) and extra length between cryomodules. Matching is not trivial task.

"Optimal" Quadrupole Strengths

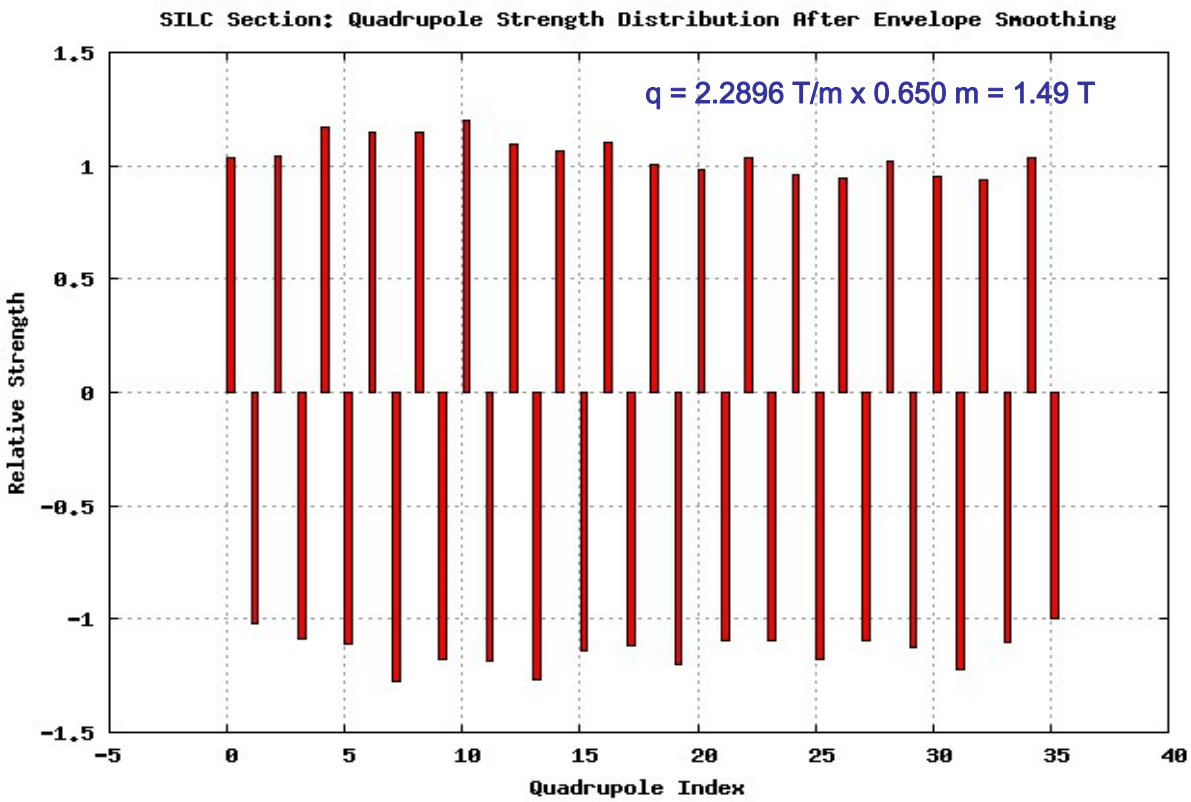

Relative strength quad distribution a long the S-ILC section after envelope smoothing. Strength = 1 corresponds to a phase advance of ~90 deg in the first cell.

Deflecting Cavity for the Beam RF Splitter

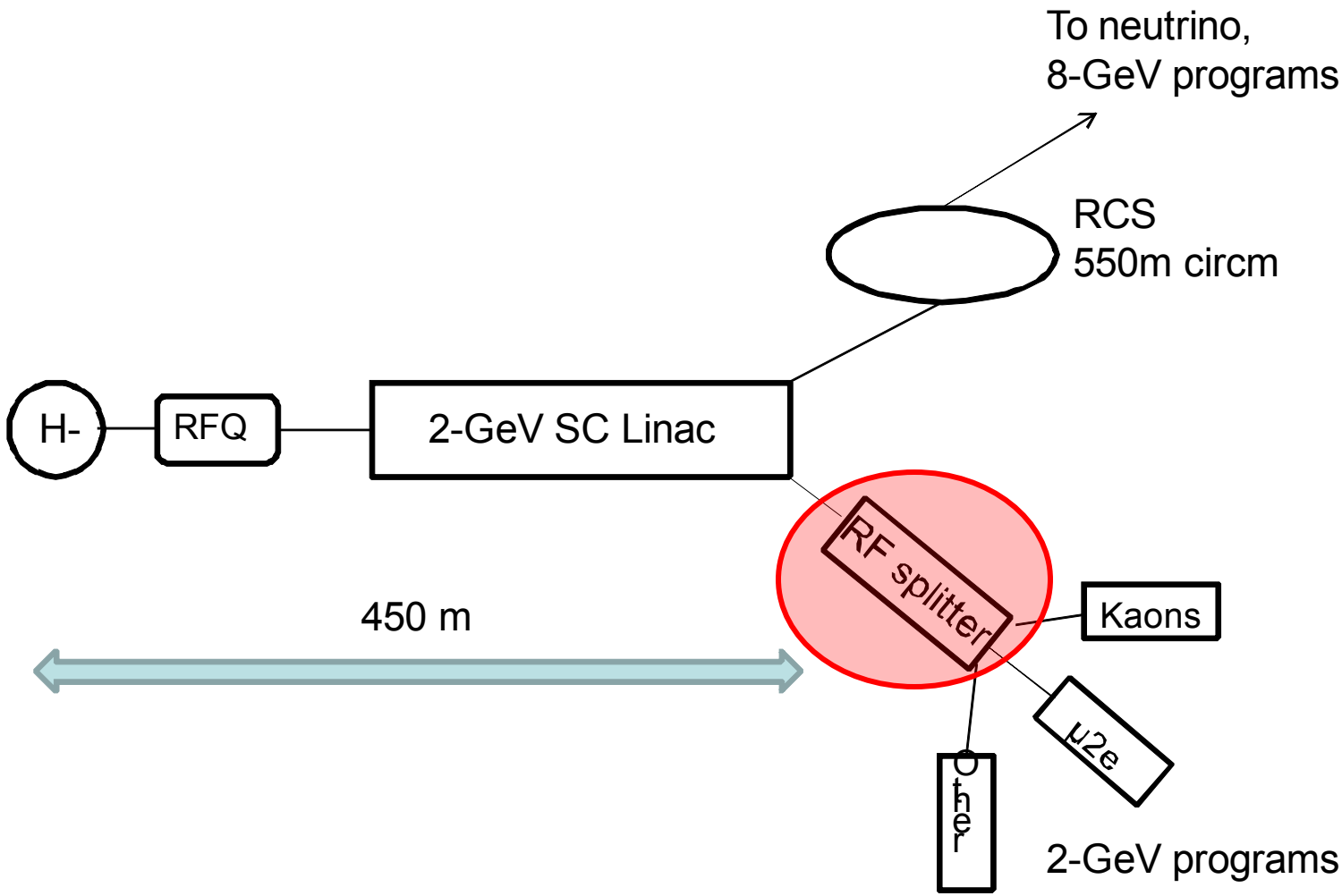

Deflecting Cavity

- RF separator directs (at 2 GeV)
  - two quarters of the beam to one user (Mu2e),
  - one quarter to another user (Kaon), and
  - one quarter to the third (unidentified) user.
- SC structure with the deflecting TM_{110} mode operating at the frequency $f_0(m\pm1/4)$, where f_0 is the bunch sequence frequency (f_0=325 MHz).
- Good compromise F=406.25 MHz (m=1) with a deflection $\Delta p_{\perp}c$ of ~15 MeV, it is possible to achieve a total deflection angle of ±5 mrad (E=2 GeV).
- Assuming a 20 m long drift space, the beam separation is 100 mm (> $10\sigma_x$).

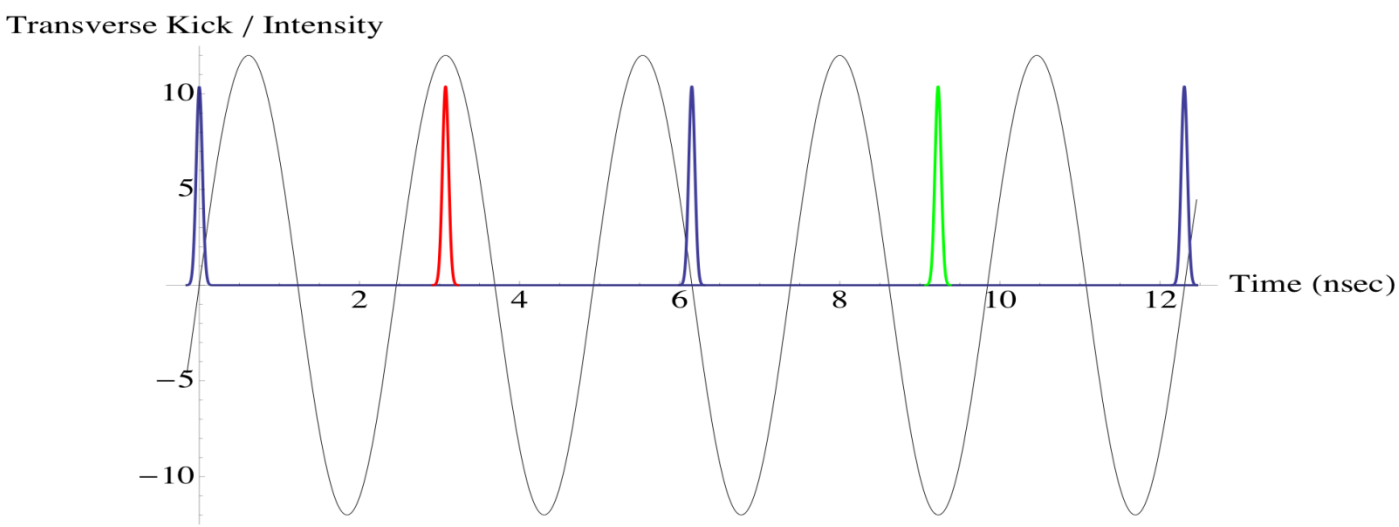

500 MHz KEKB crab cavity

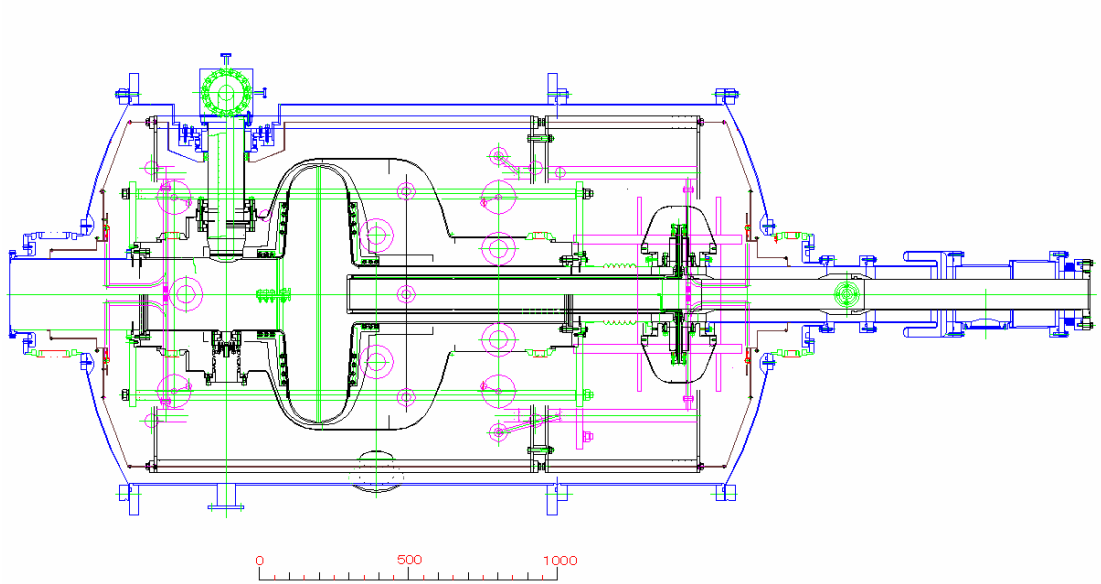

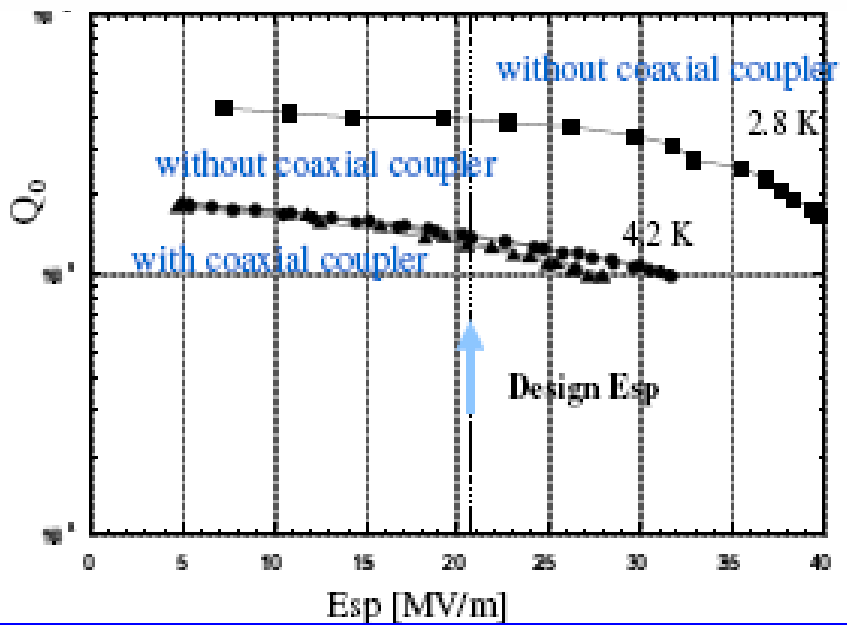

E_{sp} ~30MV/m (V_{kick}=2.1 MV),
Q_0 >10^9 at 4.2 K.
Operating value is
E_{sp}=21MV/m, or
V_{kic}=1.44MV.
Beam current 1.8 A

Deflecting Cavity design

E field

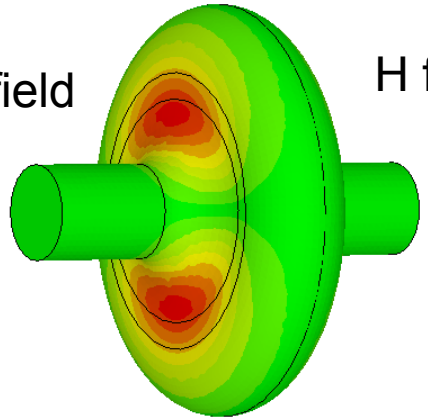

H field

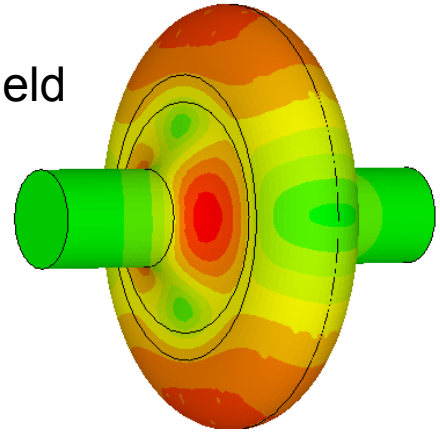

Main parameters of operating mode

Parameters	
E_{sp}/V_{kick} , (MV/m)/MeV	7.8
B_{sp}/V_{kick} , mT/MeV	19.2**
R/Q*(Ohm)	27
Longitudinal size (mm)	440
Vertical size (mm)	865
Horizontal size (mm)	962

*$R/Q=V_{kick}^2/(2\omega W)$
**compared to 41.5 mT/MeV for KEKB CC

High order modes

MONOPOLE			DIPOLE1			DIPOLE2		
F,MHz	R/Q,Ω	Q	F,MHz	R/Q,Ω	Q	F,MHz	R/Q,Ω	Q
289.2	118	1.5 10^5	406.25	27.3	1 10^7	427.9	25.2	2.4 10^5
557.1	1.5	8.8 10^5	529.1	6.2	3 10^4	528.3	6.1	2.3 10^4
635.7	6	5.7 10^4	691.4	0.16	7.4 10 ^4	695.7	0.04	2 10^5
692.6	0.001	2 10^5	726.7	0.03	3 10 ^5	743.6	0.14	8 10^4

LOM/SOM/HOM damping requirements:

•Monopole mode (LOM):
$P = I_0^2[(R/Q)Q_{load}]/2 < 0.1P_{cryo} = 26$ W,
$Q_{load} < 4e5$ for (R/Q)=118 Ohm.

•Dipole modes (SOM):
$V_{kickSOM} < 0.01V_{kick}$ for Δy=5 mm. $Q_{load} < 3e7$.

•Dipole modes (HOM):
$Q_{load} < 1e8$ for (R/Q) = 6 Ohm.

Cryomodule

- RF kick of 15 MeV one needs 4 cavities (3.75 MeV/cavity, 72 mT)
- The length of the cavity + power coupler + HOM couplers is ~1m (4.5m total
- Transverse size is about ~1 m.

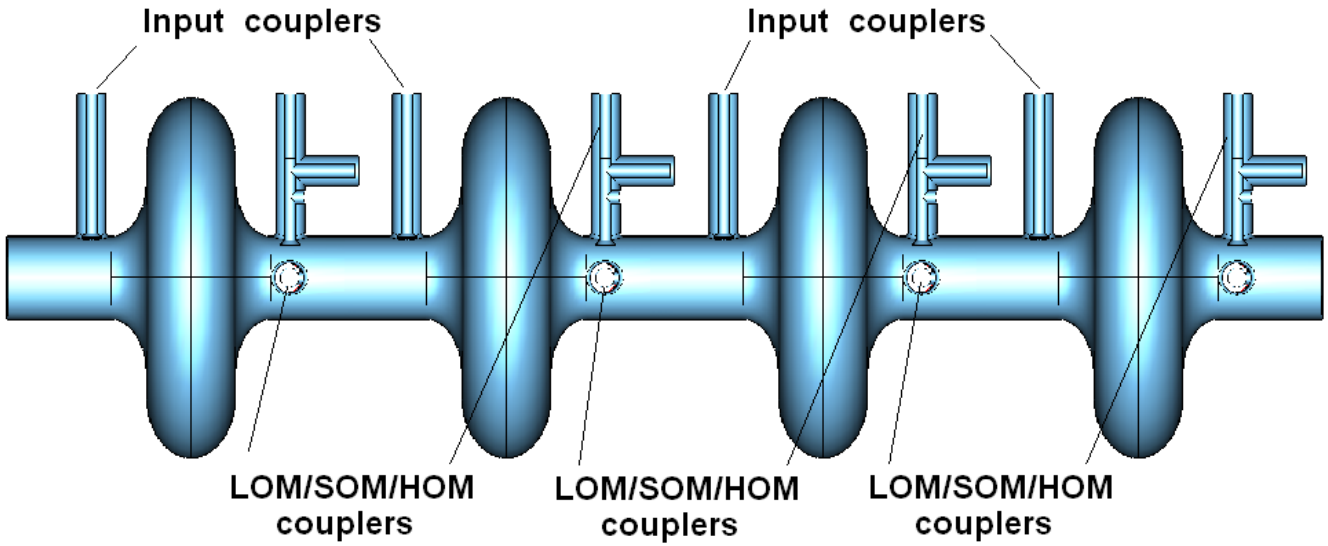

LOM/SOM/HOM dampers and notch filters

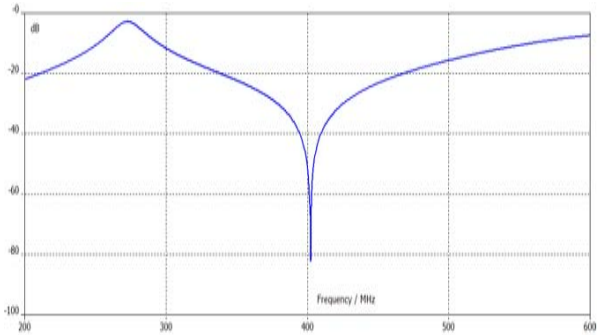

Power requirements:

- Power necessary to maintain RF field (Q_0=1.e9, 4.2 K):
  $P=V_{kick}^2/[2(R/Q) \times Q_0]$ = 260 W/cavity – cryogenic losses

- Compensation of the beam loading caused by misalignment
  ($\Delta x=\sigma_x$=5 mm; $U_{ind}<0.01\times V_{kick}$):
  $U_{ind}= I_0 \times(R/Q) \times(k\ \Delta x)Q_{load} < 0.01\times V_{kick}$; $Q_{load} < 3e7$ and
  $P=V_{kick}^2/[2(R/Q) \times Q_{load}]$ = 9 kW/cavity

- Microphonics: Q_{load}~1.3e7 ($\Delta f \sim 6\sigma_f$ =30 Hz for σ_f = 5 Hz)
  $P=V_{kick}^2/[2(R/Q) \times Q_{load}]$ = 20 kW/cavity; **P_{total} = 80 kW.**

- Compensation of the beam loading caused by the beam deflection:
  $Q_{beam_load}\sim Z_{beam}/Z_0$ ~1.e10, not an issue ($Z_{beam}=p_{||}c/e/I_0$).

- Total cryogenic losses: ~1 kW at 4.2 K.

Conclusion

- Design of the CW linac for 2 GeV, 1mA looks feasible.
- Many critical components (cavities, couplers, RF sources, magnets) are exist, or designed. Some were tested at FNAL or elsewhere.
- HINS provide experimental proof of principle for SC solenoids and spoke cavities
- First look on Lattice not discovered problem. Work is ongoing.
- Collaboration and expertise is key of success