Project X
Control System

J. Patrick

September 11, 2009

Control System Strategy

- Goal should be a unified control system for entire complex
  - Not separate ACNET, EPICS, Brand X, … parts
  - Not separate Project X linac(s), MI, recycler, NUMI parts
  - Not separate machine and “industrial” control parts
  - Single copy of core services – alarms, data logging, save/restore,
  - Much easier to operate and maintain
  - More personnel flexibility

- Requirements exercise late 2007-early 2008
  - System non-specific
  - Beams doc 2934
  - Seminar in February 2008 – beams doc 3041

General Comments

- Current Fermilab Control System (ACNET) supports large complex with diverse simultaneous operational modes
  - 8 GeV fixed target, 120 GeV fixed target, NUMI (neutrino program), antiproton stacking, Tevatron collider
- Very modular system, continuous evolution in software and hardware over its history
  - Run II improvements include substantial data logging enhancement, Java language applications and central processes, port of VAX software to Linux, new BPM and BLM hardware, updated communication protocol, ….
- Plan to continue with this system through the NOvA era
  - Obsolete hardware will be replaced in linac/booster/MI/Recycler
  - Software frameworks will be modernized

General Comments

- EPICS has a substantial following at other labs
  - Subsystems developed by collaborators likely will prefer it
  - HINS and NML test facilities begun with mostly EPICS
    - EDM has served these facilities well
    - More complicated applications have not yet been written
- HINS and NML are a good test bed for Project X controls
  - Relatively small scale
  - Qualitatively similar operational mode
  - Less pressure on reliability than main accelerator operations
- Both ACNET and EPICS will evolve a lot by the start of Project X construction
  - Expect NSLS-II and ITER will drive EPICS development

ACNET Basics

- 3-tier architecture
- Flat device.property model
- Efficient custom UDP based communication protocol
- Core alarms, data logging, save/restore etc. services
- Central device/node and application database (Sybase)
- Applications and central services run on Linux
  - C/C++ (old style GUI) + Java frameworks
  - DnD Synoptic Builder with inherent web browser rendering
- Front-ends run on VxWorks or Labview (or very old PSOS)
- Large diversity of hardware supported
  - CAMAC, VME(VXI) predominate
  - General Purpose data acquisition front-end (HRM)
- Timing discussed in separate talk

Control System Overview

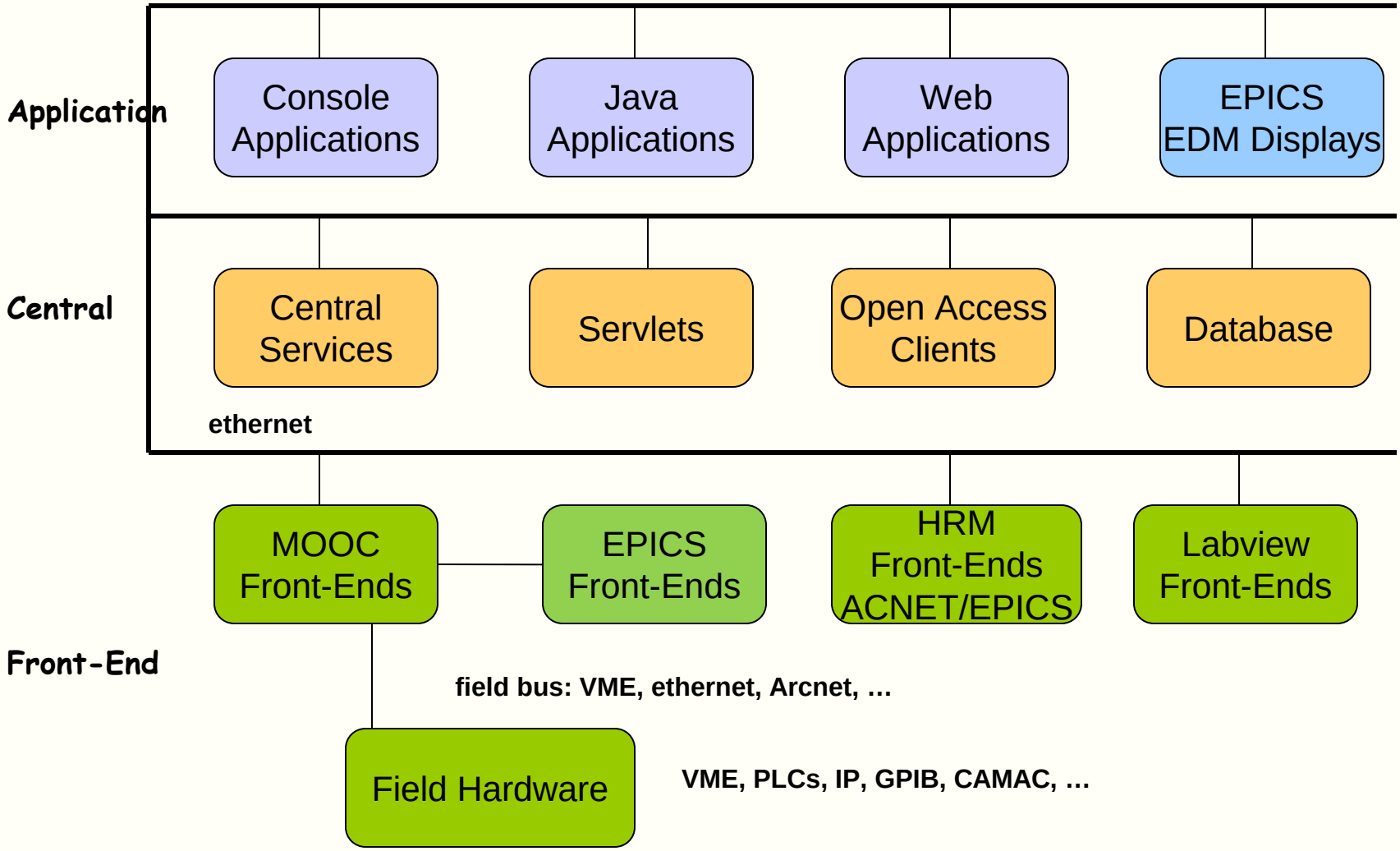

Current Plan

- Base core on evolution of Fermilab Control System
  - General architecture, communication protocol, central services
  - Extensive experience and proven core infrastructure
  - Will be in use and evolved in NOVA era
- Support EPICS “underneath”
  - IOCs interface at front-end level – DESY EPICS2TINE model
  - High level communication still ACNET
  - EDM fully supported, can access both EPICS and ACNET devices
  - Track EPICS evolution and define supported subset
- Remote labs could then develop their hardware with EPICS and provide front-end code and EDM screens
  - Straightforward to integrate into main control system at Fermilab
  - Can also consider hardware with “turn-key” EPICS support

Current Status

- EDM screens
  - Can be launched from standard control system consoles
  - Can access ACNET as well as EPICS devices
  - Are integrated with the controls code management system
- EPICS IOCs can be interfaced to an ACNET front-end
  - Currently DB files are not captured in a database

Plans

- Evolve software frameworks
  - New front-end framework under development (“OODA”)
    - Support Linux, x86 processors
  - Studies on C++ GUI toolkits
- Evaluate new hardware platforms
  - VXS, xTCA?
- Develop plan to refurbish linac/booster/Main Injector during the NOvA era
- Try out ideas at HINS/NML
  - Both hardware and software

CC2 Base Display (EDM)

Fermilab

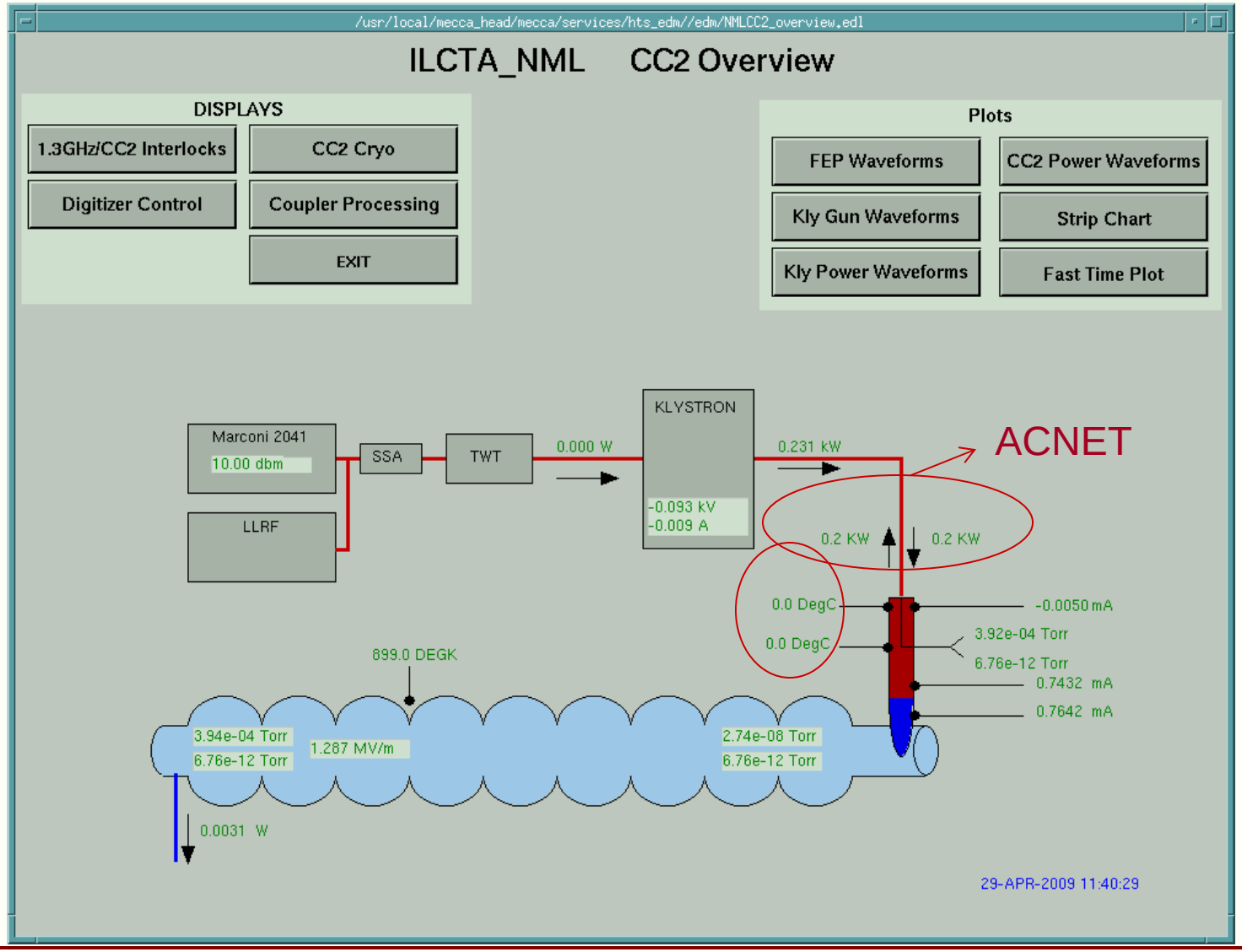

NML Capture Cavity (ACNET)

Fermilab

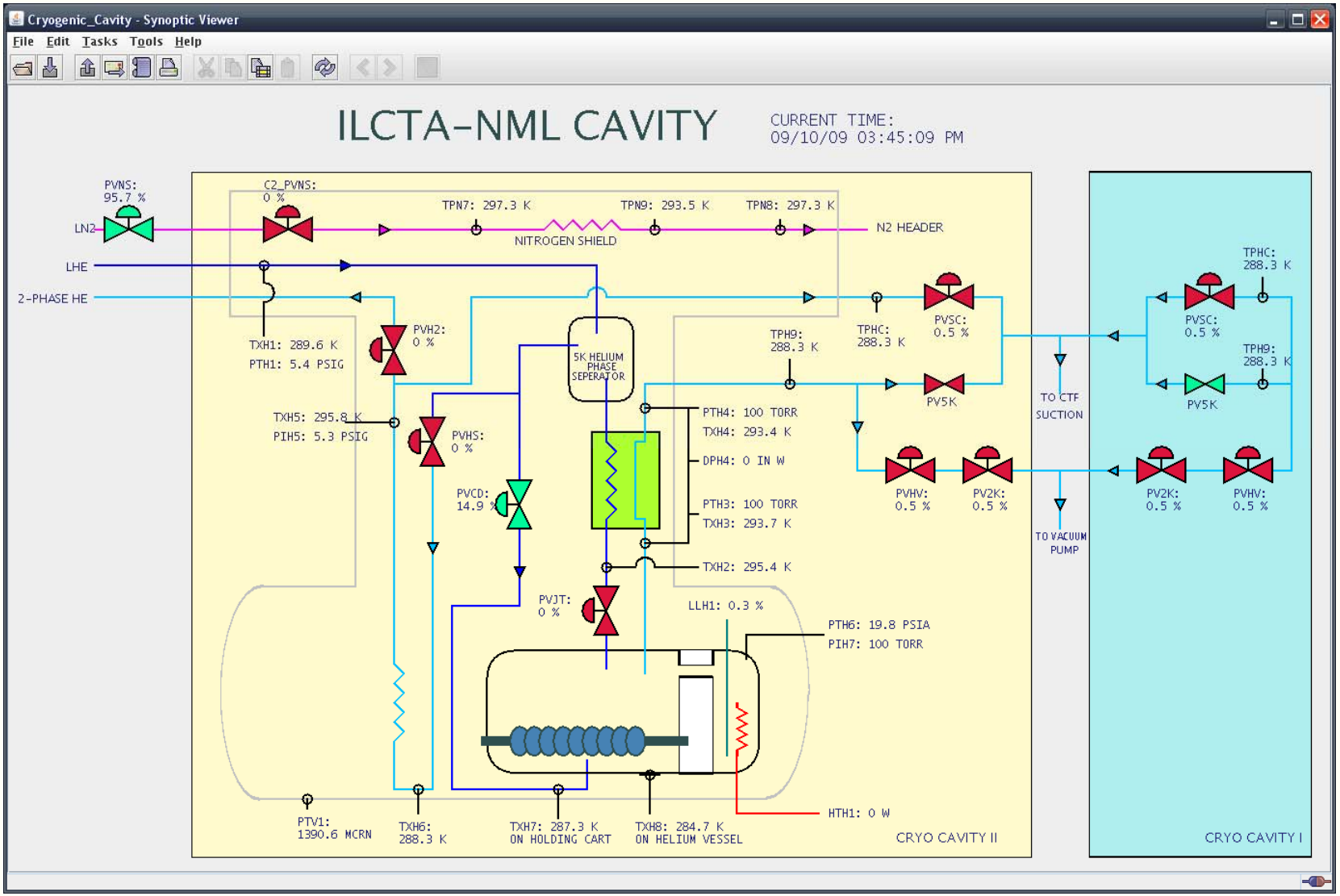

NML Cryo Parameters (ACNET)

Fermilab

PA N4<NoSets> - ACNET Java Console

File View Help

PA PB PC SA SB SC Util GxPA1 GxPA2

```
N4                                        SET     D/A   A/D  Com-U ♦PTools♦
-<FTP>+ *SA♦ X-A/D  X=TIME      Y=D:TRROT ,          ,        ,
COMMAND ---- Eng-U  I= 0        I= 0      , 0 [redacted]  , 0      , 0
-< 1>+  One+ 15_Hz  F= 90       F= 360    , 100    , 10     , 200000
  rf    timing  vacuum   llrf    CRYO   water   diagnos   misc
 N:C2PVH2     2-PHASE RETURN ISOLATION              0      %OPN
 N:C2PVNS     SCRF N2 THERMAL SHIELD                0      %OPN
 N:C2PVJT     SCRF VESSEL FILL VALVE                0      %OPN
 N:C2PVHS     SCRF 5K THERMAL SHIELD                0      %OPN
 N:C2PVCD     SCRF VESSEL COOLDWN VLVE              0      %OPN
 N:C2PV5K     SRF HE SUCT RETURN VALVE                          F
 N:C2PVSC     5K SHIELD COOLDOWN VALVE              0      %OPN
 N:C2PVHV     CCII VAC ISOLATION VALVE              0      %OPN
 N:C2PV2K     CCII VAC THROTTLE VALVE               0      %OPN

 N:C2PTH1     SCRF 1 PHASE INLET PRESS             .02     PSIG
 N:C2PTH3     SCRF VESSEL RETURN PRESS           * 115.9   TORR
 N:C2PTH4     SCRF HEX SHELL OUT PRESS             116     TORR
 N:C2PTH5     5K SHIELD OUTLET PRESS               .23     PSIG
 N:C2PTH6     SCRF PRESS 1000 TORR MAX             748.2   TORR
 N:C2PTH7     SCRF VESSEL PRESS 100                116     TORR
 N:C2PTH8     SCRF PRESS 0 TO 25 PSIG              .08     PSIG
 N:C2PTN7     N2 SHIELD INLET  PRESS               .16     PSIG
 N:C2PTN8     N2 SHIELD OUTLET PRESS               .12     PSIG
 N:C2PTV1     SCRF VESSEL INSUL VACUUM             9.7     MCRN

 N:C2DPH2     SCRF HEX SUPPLY DP                   .04     IN W
 N:C2DPH4     SCRF HEX RETURN DP                  -.01     IN W

 N:NMLUPT     NMLOPC Uptime                      852       Min
```

Connected to clxsrv.fnal.gov:1920

HINS Timing (EPICS)

Fermilab

/export/home1/schumann/edm/from_cdcvs/llrf_edm//edm/timer.edl

PD_KLY1 Timer Card 1 Definition

	DELAYS	WIDTHS	EVENT	
0	700	10	A7	Modulator Trig
1	3495	3500	A7	Fwd Pwr Interlk Gate
2	3425	3425	A7	Rev Pwr Interlk Gate
3	3400	10	A7	RF Interlk Digitizer Trig
4	3400	3500	A7	RF Gate
5	4100	701	A7	LLRF Gate
6	1000	10	A7	Spectrum Analyzer Trig
7	4000	10	A7	Scope Trigger

RF to Refl Start Delta: 1 / 10 — RF <= 100, RF >

End Delta: 1

All times in microseconds

Restore Defaults | Save Defaults

/export/home1/schumann/edm/from_cdcvs/llrf_edm//edm/timer.edl

PD_KLY1 Timer Card 2 Definition

	DELAYS	WIDTHS	EVENT	
0	700	10	A9	A8 - Ion Src Event Trigger
1	700	10	AC	A7 - RF Event Trigger
2	700	10	A7	A6 - Beam Event Trig
3	3700	10	A7	RF Detector Sample Trig
4	3495	3000	A7	S/H Trigger 1
5	500	10	AC	Spare
6	0	800	AC	LLRF Prepulse
7	3425	10	A7	Spare

RF to Refl Start Delta: 1 / 10 — RF <= 100, RF >

End Delta: 1

All times in microseconds

Restore Defaults | Save Defaults

HINS Timing (ACNET)

Fermilab

PB N4<NoSets>

```
N4    HINS TRIGGER PARAMETERS        SET      D/A    A/D   Com-U ◆PTools◆
-<FTP>+ *SA◆ X-A/D   X=TIME      Y=D:TRROT ,          ,          ,
COMMAND ---- Eng-U   I= 0        I= 0      , 0        , 1.0E-10, 1.0E-10
-< 1>+  One+ AUTO    F= 300      F= 360    , 1.0E-06, 1.0E-06, 1.0E-06
  rf     TIMING  vacuum   llrf    cryo   water   diagnos   misc
-E:MTRIGD      MOD FIRE TRIGGER DELAY          .7     *  .7     MS
-E:FPWRGD      Intrlk F Power Gate del       3.495   * 3.495   MS
-E:RPWRGD      Intrlk R Power Gate del       3.425   * 3.425   MS
-E:DIGTRD      Intrlk Digitizr Trig del      3.4     * 3.4     MS
-E:GATED       RF Gate Delay                 3.4     * 3.4     MS
-E:LLRFGD      LLRF Gate Delay               4.1     * 4.1     MS
-E:SPECTD      Spectrum Analyzer Tr del      1       * 1      MS
-E:SCOPED      Scope Trigger Delay           4       * 4       MS
-E:EVA8TD      A8, Ion Src Event Delay        .7     *  .7    MS
-E:EVA7TD      A7, RF Event Tr
-E:RFDETT      RF Detector Sam
-E:SHTRD       Sample & Hold T
-E:LLRFPD      LLRF Prepulse G
```

HINS Timing Plot

File Edit Tasks Tools Help

HINS Timing Plot

Mon Apr 27 07:59:39 CDT 2009

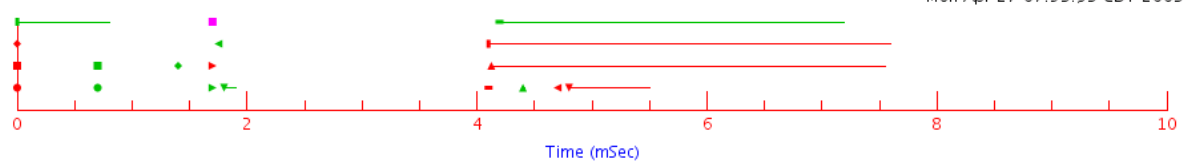

Cursor Position

Event A8 (Beam Acc A6 Ref)	0	Event AA (1Hz)	0	Event A9 (0.1Hz)	0	Intrlk R Power Gate del	4.125
Intrlk Digitizr Trig del	4.1	RF Gate Delay	4.1	LLRF Gate Delay	4.8	Spectrum Analyzer Tr del	1.7
Scope Trigger Delay	4.7	A8, Ion Src Event Delay	0.7	A7, RF Event Trig Delay	0.7	A6, Beam Event Trig del	1.4
Sample & Hold Trig delay	4.4	RF Detector Sample Trig	4.195	LLRF Prepulse Gate delay	0.001	IS MOD TRIG DELAY	1.8
LV SAMP &HOLD TRIG	1.7	HINS Utility Scope Trig	1.75	HINS INST TRIG DEL	1.7		

Plot Widths Start Time (ms) 0 Stop Time (ms) 10 Zoom Center 5 Scale Factor 0.75 Original

NML Logged Cryo Data (ACNET)

Fermilab

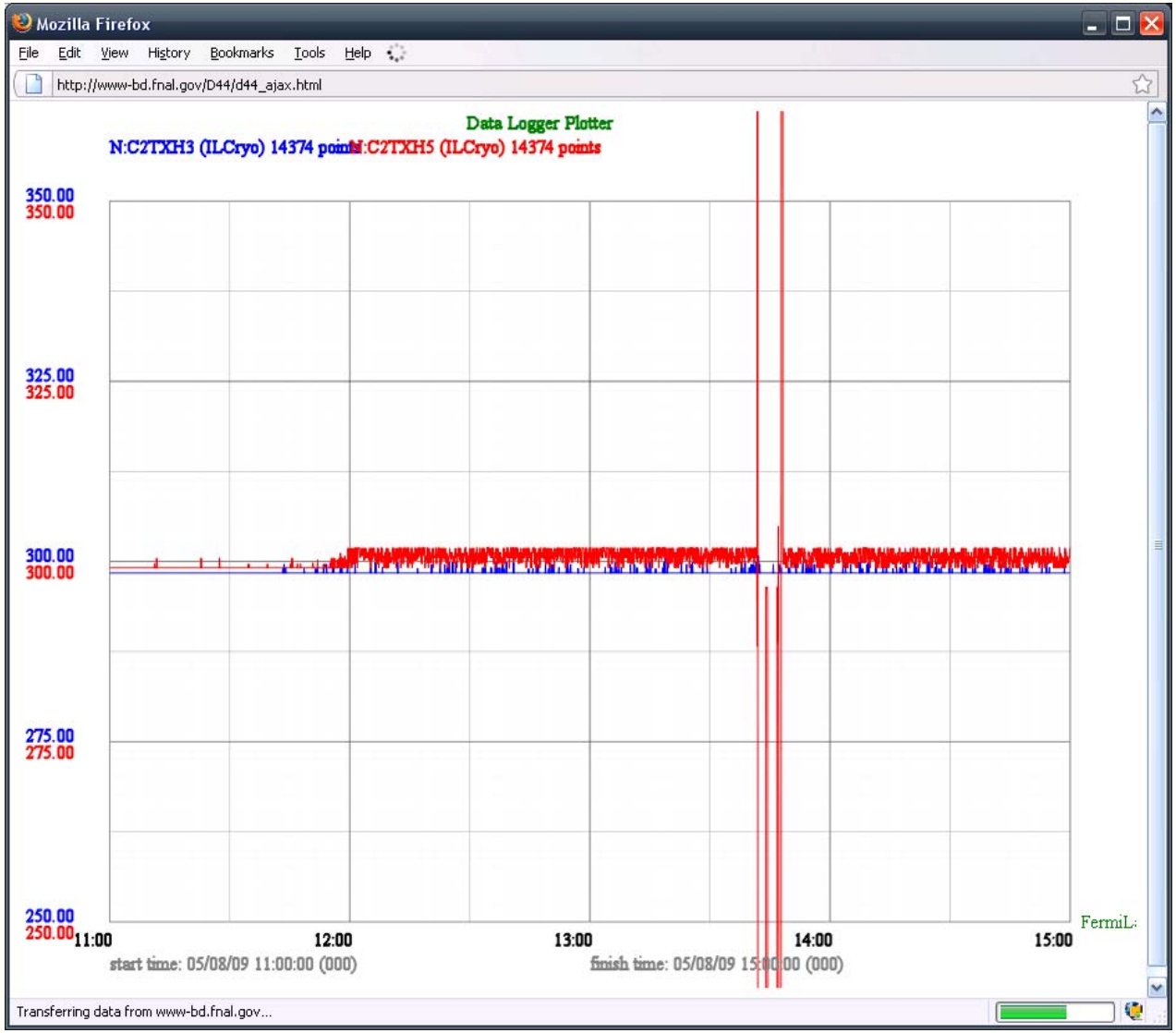

HINS RFQ Control - EDM

Fermilab

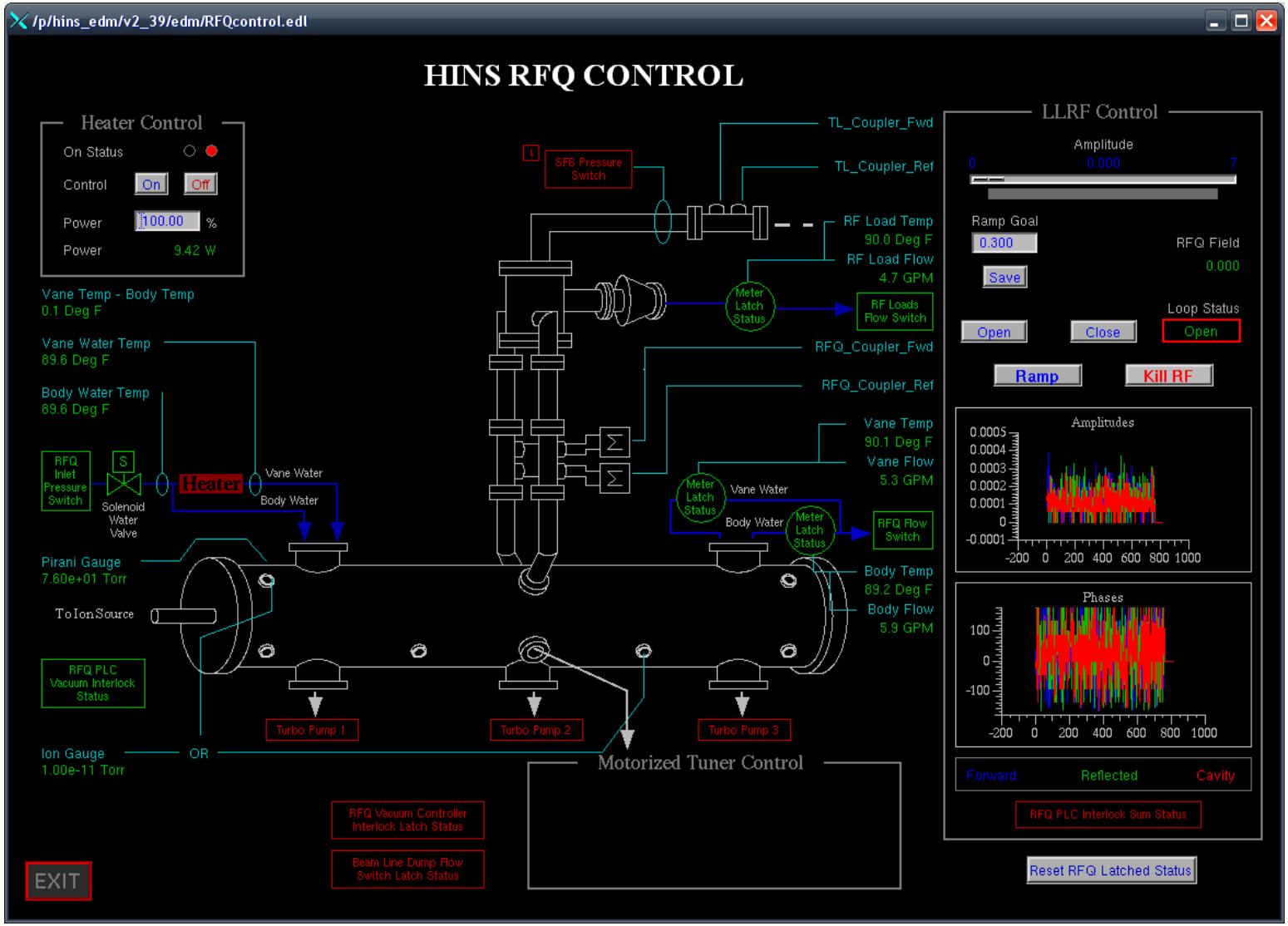

HINS RFQ Control - ACNET

Fermilab

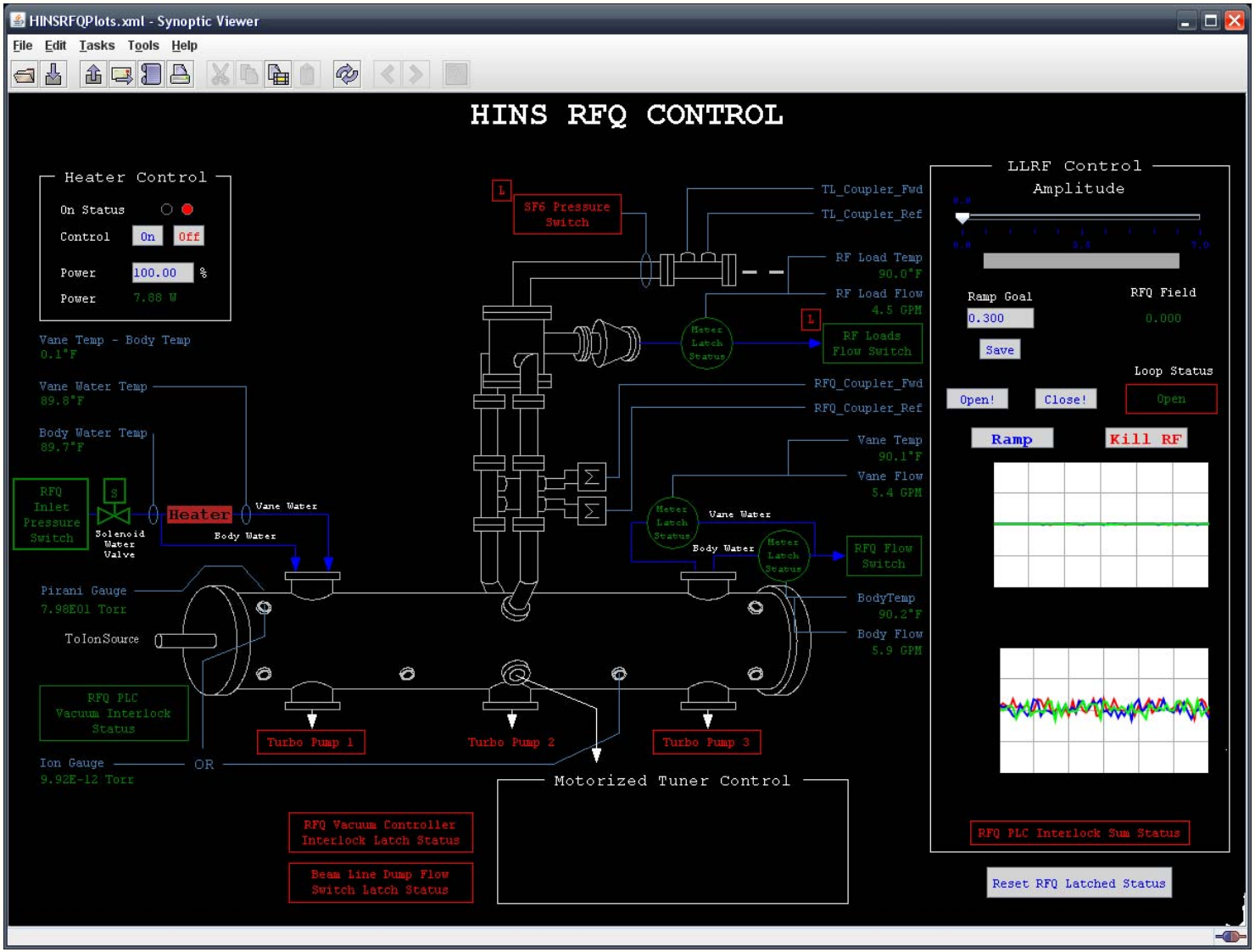

RFQ Control – ACNET - Firefox

Fermilab

Identical Display Description

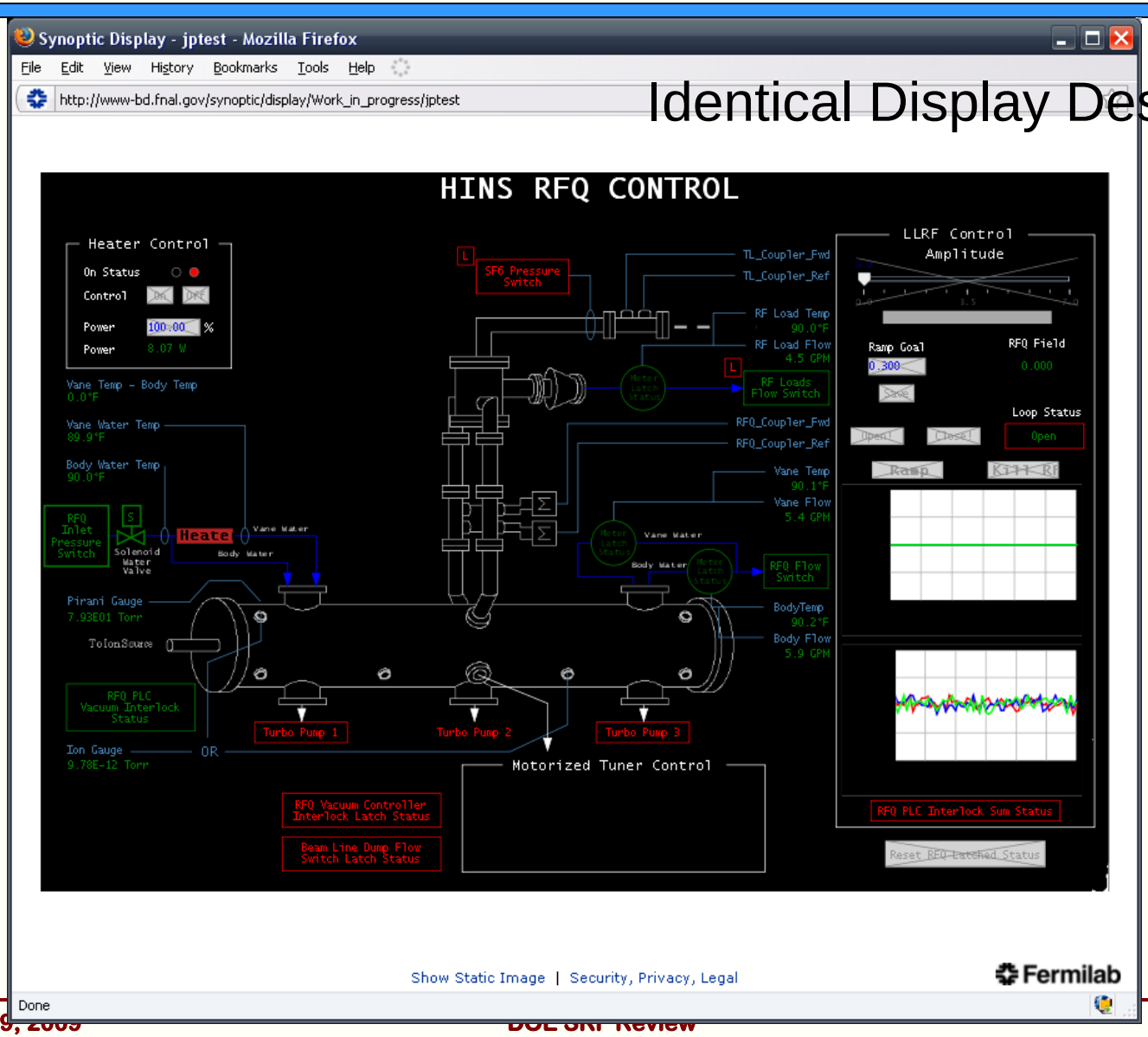

Summary

- Current plans are to continue the evolution of the current Fermilab Control System as the basis for Project X
  - Modernize software frameworks
  - Refurbish obsolete hardware
- Support EPICS IOCs and displays
  - Facilitate subsystem development by collaborators
  - Enable use of turn-key hardware
  - The basics are available now
- Try out ideas at HINS/NML
- Expect significant evolution before construction start