Director's Review of the Project X Cost Range Estimate: System Protection

Peter S. Prieto
Project X Director's Review
March 16, 2009

Outline

- Scope of Estimated Work
- Boundary Conditions /Assumptions
- Basis of Estimate
- Technical Risks/Associated Cost Exposure
- Potential Technical Revisions

- Role of Outside Collaborators
- Summary

Scope of Estimated Work

RF Interlock Fast signals

- 8 Channel FWR/REFL Power board.
- 6 Channel PMT board.
- 6 Channel Field Emission Probe board.
- 8 Channel Fiber Opto-Detector board.
- 8 Channel Relay Latch board.
- 8 Channel general purpose Analog Signal In (50 Ohm) with comparators and FPGA board.
- System Controller Board
- 1 VIDEO Pulse Detector channel
  - 1 RF Leakage Antenna channel
  - 8 TTL active low inputs (RF_INH AND MOD_INH FROM RF INTL BRDS)
  - 2 Contact inputs (SAFETY INTL AND SPARE)
  - RF INHIBIT OUT
  - MODULATOR INHIBIT OUT
  - MODULATOR READY IN
  - TEMPERATURE IN
  - VACUUM READY IN

Scope of Estimated Work

RF Interlock Slow Signals and Klystron Devices

- Waveguide Pressure : 2 channels
- Coupler Temperature :16 channels
- Coupler and Cavity Ion gauge controller : 2 channels
- Coupler and Cavity Vacuum pump : 2 channels

- These signals are handled by the PLC from which an active high
- level connects to the RF Interlocks inhibiting the LLRF.

Boundary Conditions & Assumptions

- Primary interfaces with other systems

  The RF protection system interfaces with the modulator controls supplying a modulator inhibit signal and receiving a modulator ready status. Both are TTL level type signals.

  The cost of this interface is minimal.

- The primary role of the RF Interlocks is control of the fast RF switch connecting the LLRF output to the klystron RF amplifier.
- This switch is a low cost item ~ $200 /per switch.

Basis of Estimate

- This is the meat of the presentation – go through your system and present your estimate

RF Interlock Comp	QTY	System Cost	Total # Brds Cryo	Total Cryo Cost	Total #Brds 325	325 Cost	Total Cost
System Control	1	$970.92	30	$29,127.60	10	$9,709.20	
8 ch. FWR/REFL PWR	1	$1,237.27	90	$111,354.30	10	$12,372.70	
6 channel FEP brd	1	$1,136.79	90	$102,311.10	10	$11,367.90	
6 channel PMT brd	1	$1,138.09	60	$68,285.40	10	$11,380.90	
LED Test	1	$194.15	30	$5,824.50	10	$1,941.50	
8 ch. Contact TTL	1	$245.95	30	$7,378.50	10	$2,459.50	
8 Ch. OptoDet brd	1	$1,255.52	30	$37,665.60	10	$12,555.20	
Transition boards	1	$448.95	360	$161,622.00	70	$31,426.50	
PMT Tube and PS	1	$587.47	270	$158,616.90	12	$7,049.64	
RTD Assembly	1	$81.50	240	$19,560.00	10	$815.00	
CPU	1	$2,000.00	30	$60,000.00	10	$20,000.00	
PMT/FEP PS	1	$1,500.00	30	$45,000.00	10	$15,000.00	
VME64X Crate	1	$6,400.00	30	$192,000.00	10	$64,000.00	
PLC + Modules	1	$2,000	30	$60,000.00	10	$20,000.00	
		$19,196.61		$1,058,745.90		$220,078.04	$1,278,239.40

Technical Risks

- Description of identified technical risks and associated cost exposure

Failure of RF interlocks can/will lead to

- Klystron damage ->rebuild ~ $70K to total failure ~$750 K ea.
- Coupler damage -> copper deposition rebuild ~ $70 K ea.
- Damaged RF Windows-> replace for ~$10-20 K ea.
- Cavity Damage-> replace for $??? K

Risk Mitigation

Risk Mitigation

- Goal: Inhibit RF Power < 1 us to limit energy depositions below 1 Joule

- Reduce system complexity, Simpler designs lead to robust designs
- Over Designs lead to costly designs, Under-Designs lead to system failures
- Robust design where signal path failures lead to immediate RF turn-off
- Monitor activity using different devices, higher level of protection (FEP, PMT, FWR PWR, REFL PWR, IR sensor, Vacuum monitor)
- Multiple copies of circuits operating in parallel when using FPGA's
- Extensive system testing on the bench and in the field before final implementation
- Early system failure detection built in to reduce system damage.

Potential Technical Revisions

- Potential technical revisions and potential effect on the bottom line

- The initial RF interlocks system has been tested proving the fundamental design. What remains to be done is minor circuit modifications which are tested in one board and propagate it where applicable within the rest of the system.

- The cost would be primarily in the layout chances needed, 5% of final layout which implies manpower costs mainly.

Collaborators

- Potential role(s) of outside collaborators in your system

Collaboration could exist at different levels such as

- Carrying out Design Reviews
- Test system at other labs
- Replace or remove identified weak links
- Add monitoring devices not considered previously

Summary

- Scope of Estimated Work
- RF protection system
- Boundary Conditions /Assumptions
- Monitor between klystron and couplers on cryo modules . Control LLRF to klystron. Control operation of modulator in some cases. Operate reliably, simple to operate , minimal time to setup, buit-in flexibility
- Fast signals use designed system and slow signals use cheap PLC technology
- Basis of Estimate
- Existing operation at A0 of klystron-coupler/cavity system, MESON 1.3 GHz and 3.9 GHz, and current installation at NML Cryo module system klystron-couplers/cavities (8 times the size of A0).
- Technical Risks/Associated Cost Exposure
- Damage of klystron and/or couplers and cavity (each klystron cost ~$750K)
- Potential Technical Revisions
- Add digitizers to boards not having them, explore migration to distributed system (VXS), FEP vs PMT to reduce costs
- Role of Outside Collaborators
- External design review, testing at remote site, incorporate monitors used at other labs

SYSTEM DIAGRAM

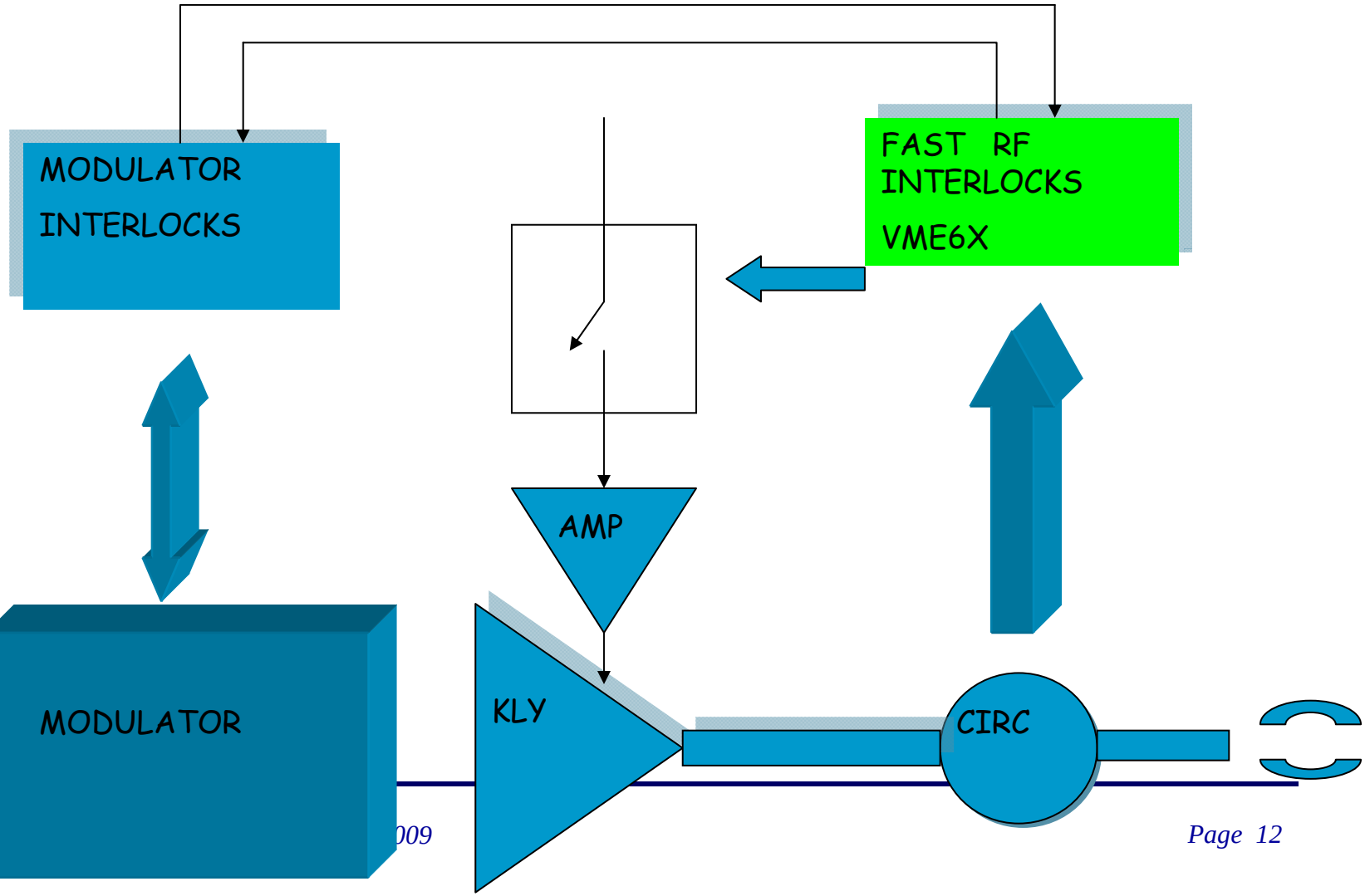
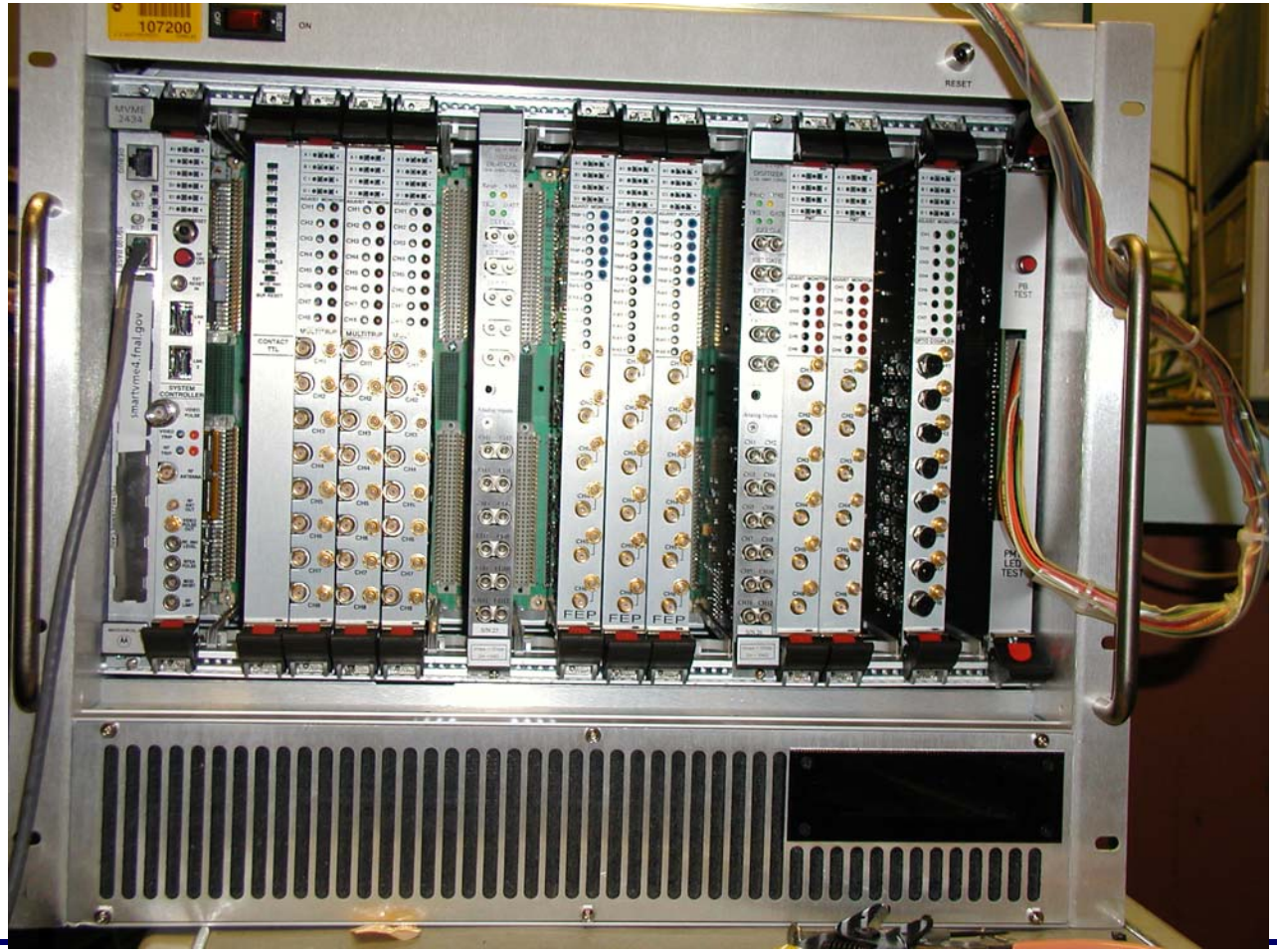
RF Interlocks for NML