PXIE Laser Diagnostics Meeting

Vic Scarpine

Aug 15, 2014

Goals

To demonstrate transverse (and longitudinal) profiling of 2.1 MeV PXIE MEBT H- beam using reduced beam current technique using either modulated low-power fiber laser (primary) or modulated higher-power free space laser (secondary)

History:

- Transverse profiling with high-power free-space laser and electron collection *operational* at SNS
- Longitudinal profiling using lower-power fiber delivery system and electron collection *demonstrated* at SNS
- Transverse profiling using high-power free-space laser and measurement of reduced beam current *demonstrated* at BNL
- No one has demonstrated transverse or longitudinal profiling using lower-power fiber lasers and reduced beam current technique
  - *Because it's very difficult*

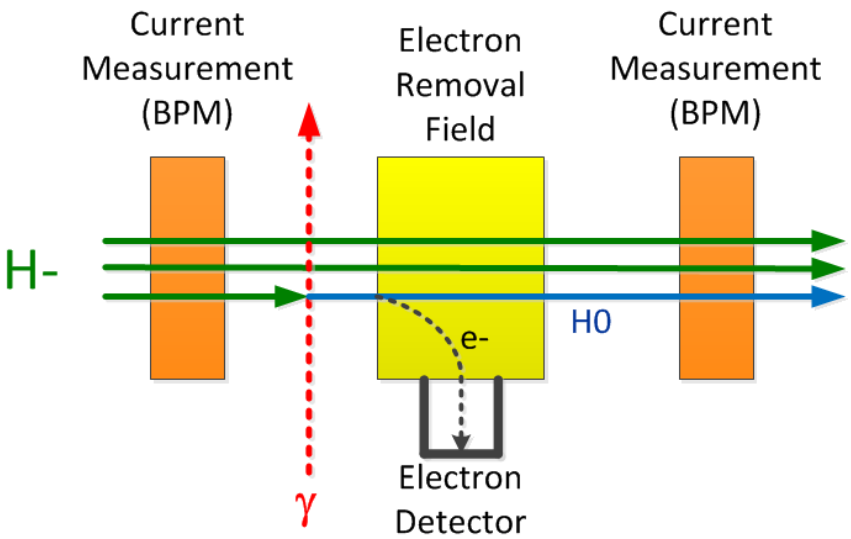

Some Numbers

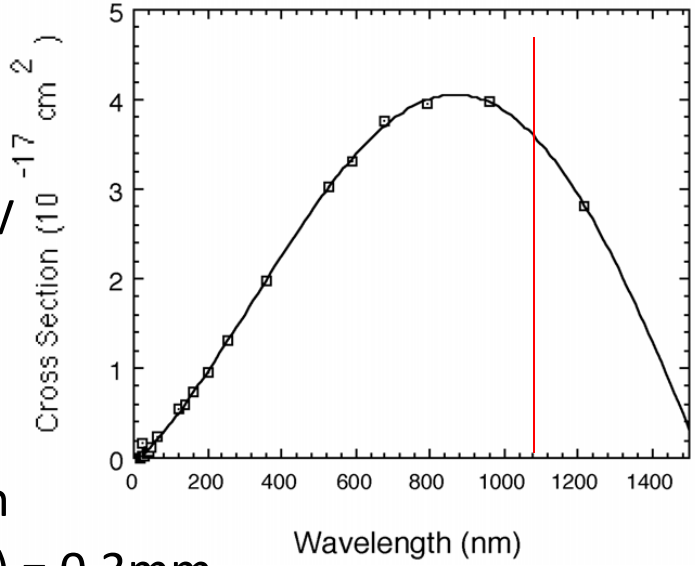

- 1056 nm photon energy = 1.88e-19 J = 1.17 eV
- E_{laser}(1W at 81 MHz) = 12.3 nJ per pulse
- N_{phot} = 6.5e10 photons/pulse
- σ_{cs}(1056 nm) ~ 3.6e-17 cm^2
- Npart(5 mA @ 162.5 MHz) = 2e8 H- per bunch

Let σ(bunch) = 3 mm and σ(laser) = 0.1*σ(bunch) = 0.3mm

Then:

N(H- ion) = σ_{cs}/(2*π*σlaser^2)*Nphot*Npartoverlap

N(H- ionization at center) ~ 8000 → 4e-5 reduction

N(H- at 1σ) ~ 5000 → 2.5e-5 reduction

N(H- at 2σ) ~ 800 → 4e-6 reduction

Note: Laser to bunch shape matching my reduce these by ~50%

So for 1 W laser we need ~1e-6 beam current modulation sensitivity

Options: Can increase laser power and/or lower laser pulse rate

Present NML/ASTA Laser Setup

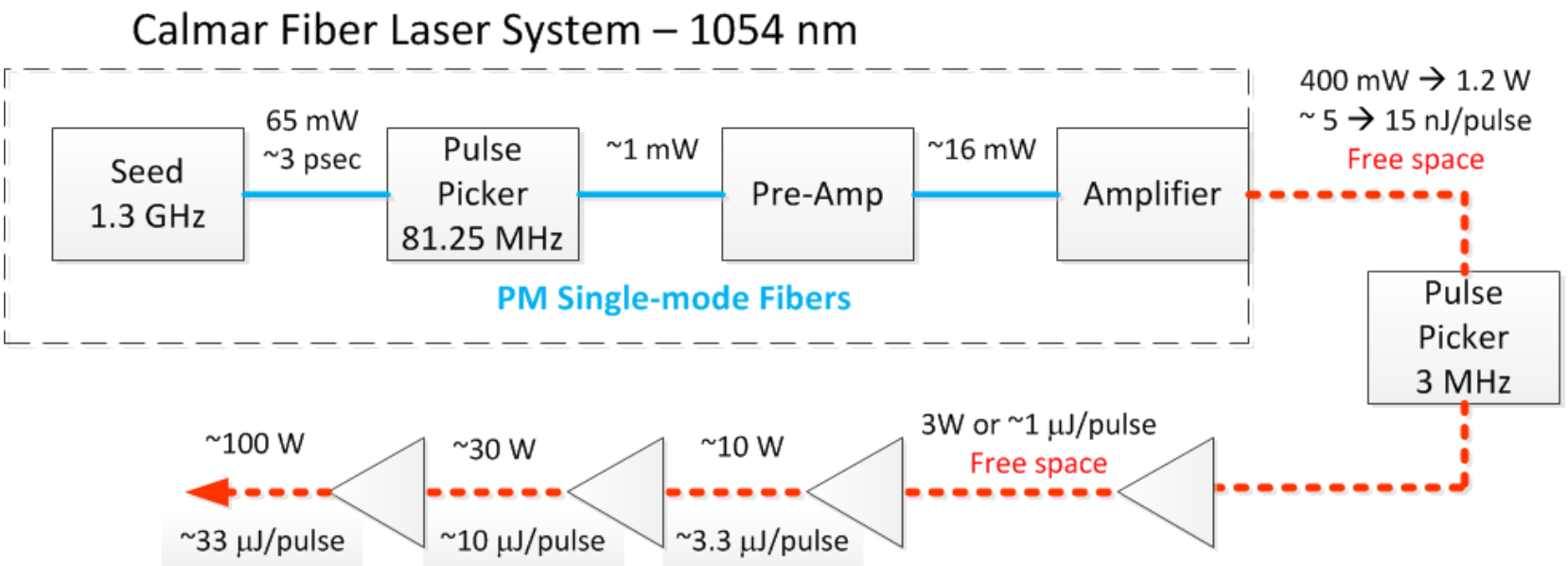

- We can test lasers, optics and fibers at NML
- We can only “borrow” Calmar fiber laser for use at PXIE

Laser Options

Option 1: Buy new output fiber amplifier

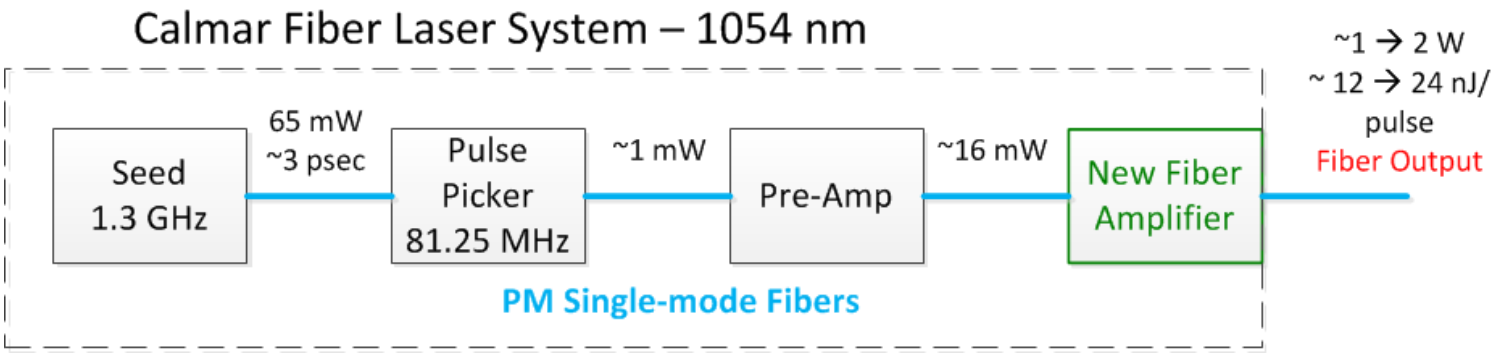

Option 2: Use free-space amplifiers and couple into fibers or transport free-space

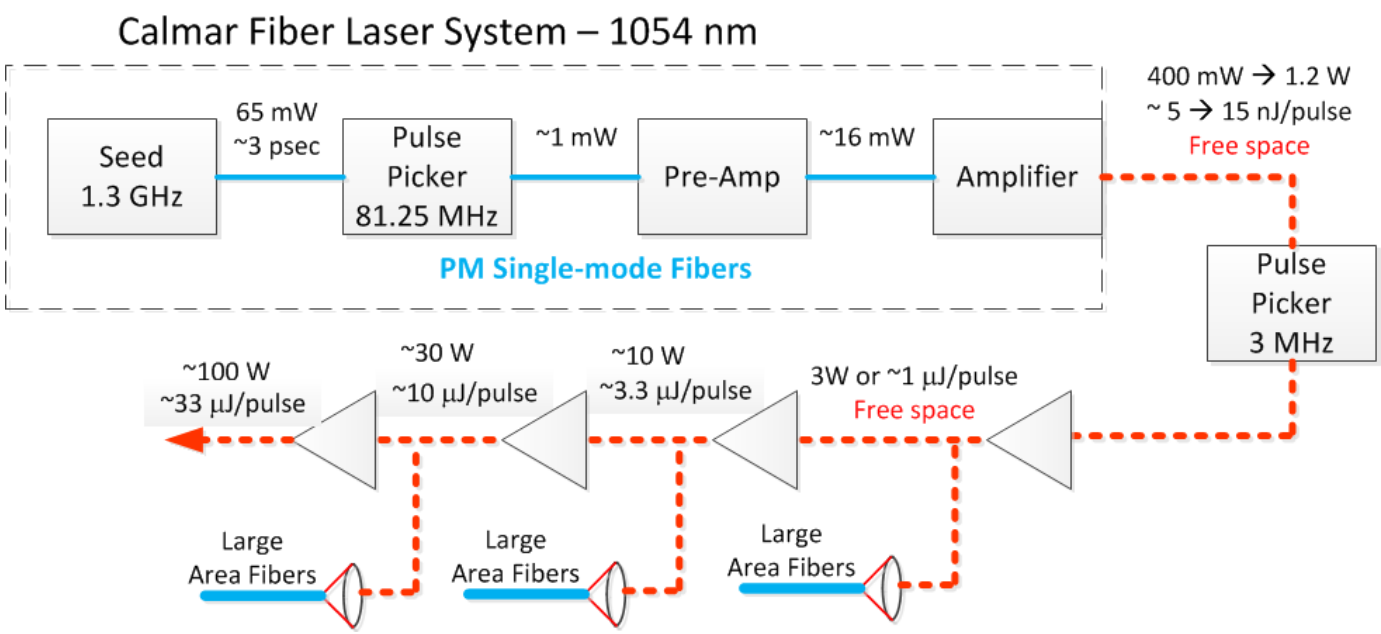

Plans

1. Design and spec laser options using Calmar laser as a seed
   1. Addition of fiber amplification
   2. Free-space amplification (see 1)
2. Test coupling free-space laser into fibers at NML laser lab
   - Large-core single-mode fibers
   - Understand non-linearities and max-power issues
3. Test optics in laser lab
   - Beam shaping and transport
4. Design and spec beamline vacuum system and optics
5. Study non-continuous (chopped) beam structure effect on lock-in ability