PXIE Medium Energy Beam Transport status

What has happened since the April'12 collaboration meeting

A. Shemyakin

Project X collaboration meeting

November 27, 2012

- MEBT scheme and specifications
- Progress with subsystems after April 2012 meeting
  - Kicker
  - Absorber
  - Bunching cavity
- Plans

PXIE MEBT

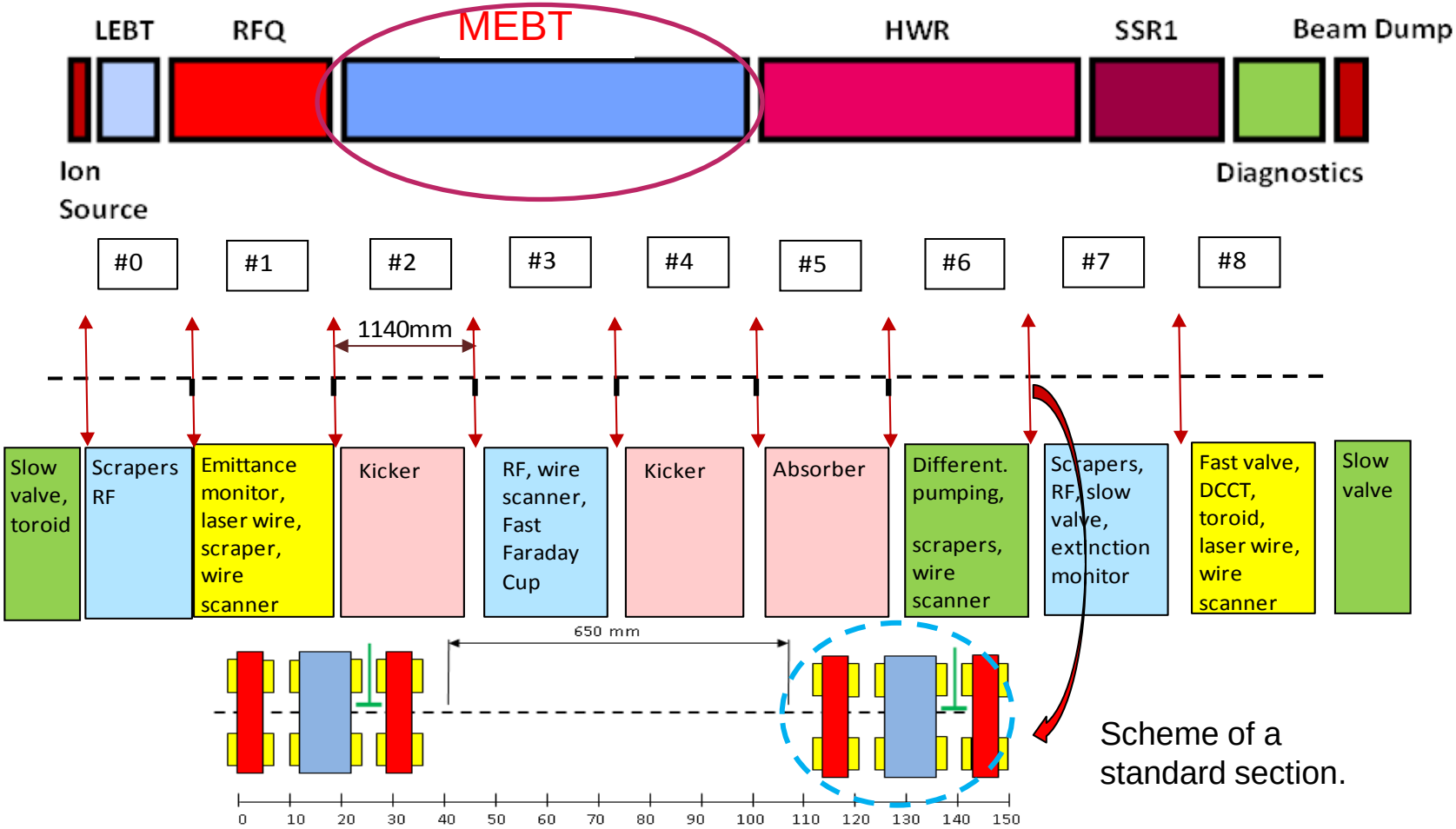

Scheme of a standard section.

MEBT scheme components

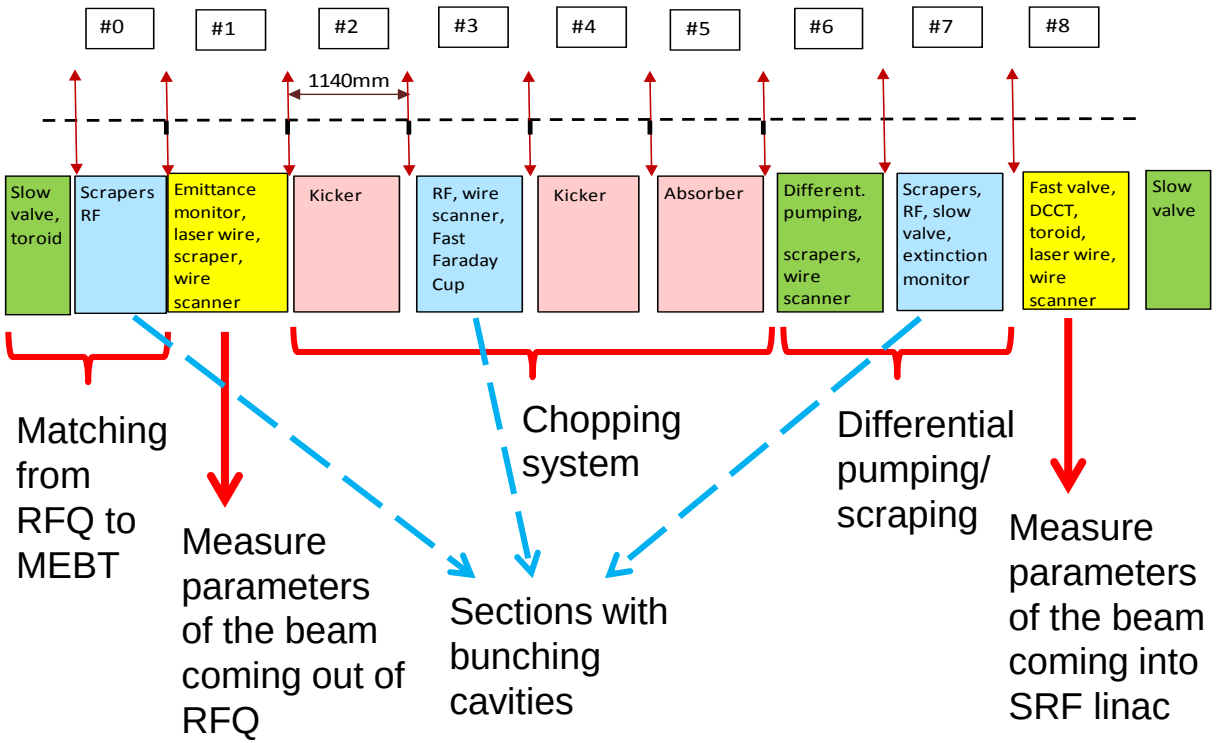

Beam energy 2.1 MeV
Input current 1-10 mA
Output current 1 mA
Max bunch
Frequency 162.5 MHz
Bunch-by-bunch selection

Specifications and scheme are stable since Jan 2012

Kicker: scheme

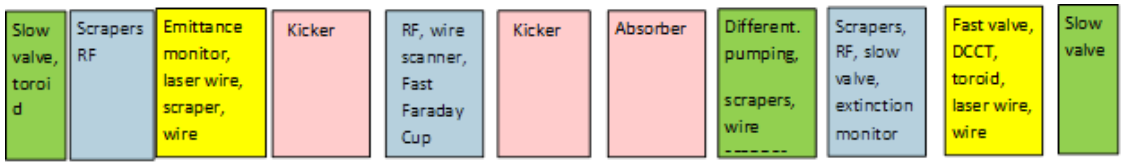

- Two travelling wave kickers working in sync
  - ~180 deg phase advance between
  - Kicker length in one section ~ 50 cm
- Bunch dimensions (6-sigma) at kicker locations:
  - ~12 mm vertical (Y), ~16mm horizontal (X), ~1.3 ns

- Any bunch of the 162.5 MHz CW train can either pass or be removed
- +/-250 V on each kicker plate for passing/removed bunches
- Flat top 1.3 ns, ±25 V

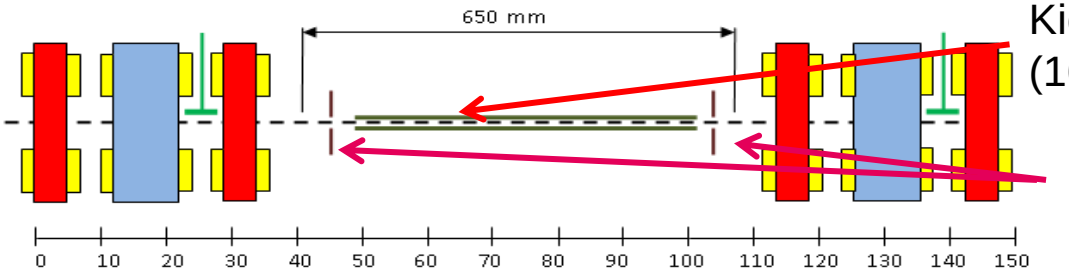

Kicker electrodes (16 mm gap)

Protection electrodes (13 mm gap)

Two versions distinguished by the structure impedance are being developed: 50 Ohm and 200 Ohm

50-Ohm version

- Driver: commercially available linear amplifier + signal pre-distortion
- Structure: Flat plates connected by 50-Ohm cables
- Mechanical design of the structure (A. Chen, D. Sun, P. Jones)
  - RF and thermal simulations are done
  - The design is at the last stage of a complete 3D model

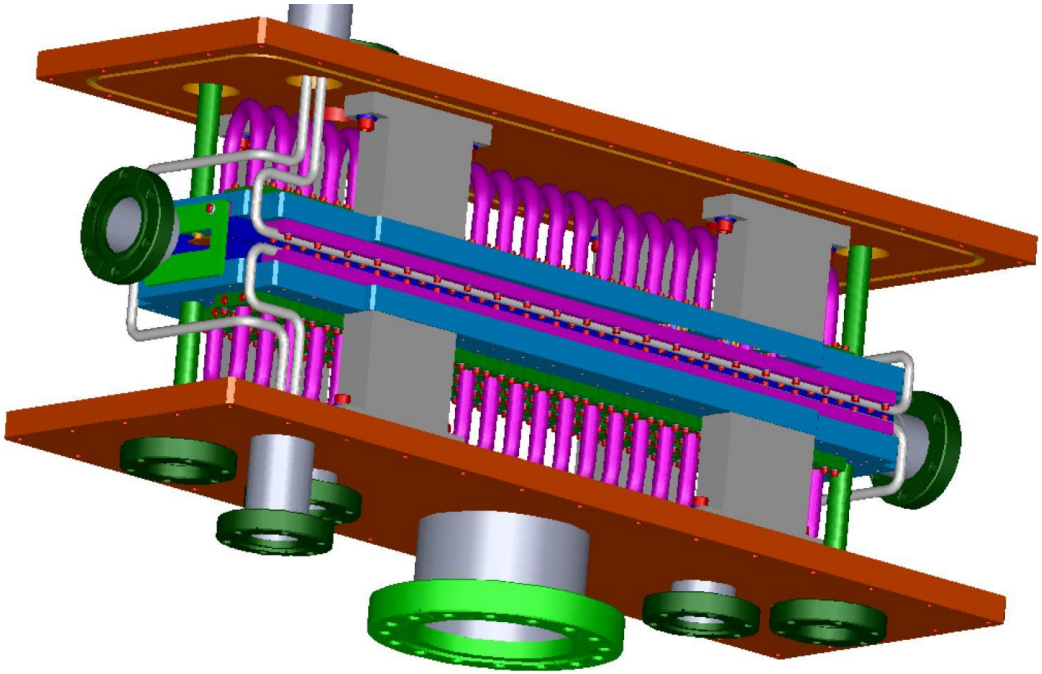

3D model of one 50-Ohm electrode assembly

50-Ohm version: tests

- A mockup with 8 plates and cables in their final RF configuration was manufactured, assembled, and successfully tested (D. Sun, V. Lebedev, R. Pasquinelli))
  - RF tests
  - power tests in air:
    - Loss at 1.3 GHz, 400W signal is equivalent to the required form (at 1 kW)
    - Measured loss is close to expectation

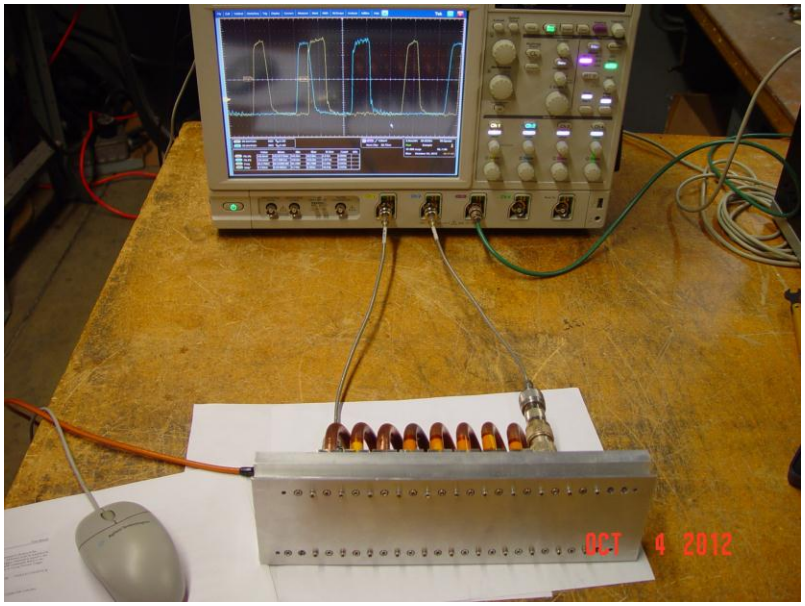

RF measurement of a 8-unit mockup.
Scope traces: yellow- input, cyan -output after the 8 delay units.
The input trace consists of two consecutive pulses with different rise time. One is 1 ns rise time and the other is "0" ns rise time.

200 Ohm version

- Structure: two helixes wound around grounded cylinders
  - Preliminary mechanical conceptual design
  - A model with the geometry optimized in simulations is under preparation
  - Design of 200 Ohm hardware progressed
    - Design of transmission lines has been proven
    - Load tested; feedthrough ordered
- Driver: in-house developed fast switch (G. Saewert)
  - Prototyping verified the design of critical sections
  - Designing a complete bipolar switch
    - The first step will be to make a fully functional 100V bipolar switch
    - PCBs have been fully designed and are in the layout stage

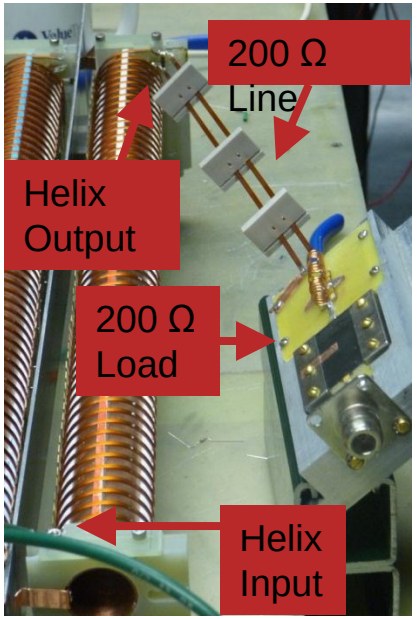

0.5 m model of the helix–based kicker with the 200 Ohm transmission line and load. (G.Saewert)

200-Ohm version: structure simulations

- RF simulations (M. Hassan)
  - Analysis in frequency domain (HFSS) and time domain (CST)
  - Good agreement with measurements of a model
  - The pitch and height of winding adjusted for the right phase velocity and impedance
  - End effect compensation (in progress)

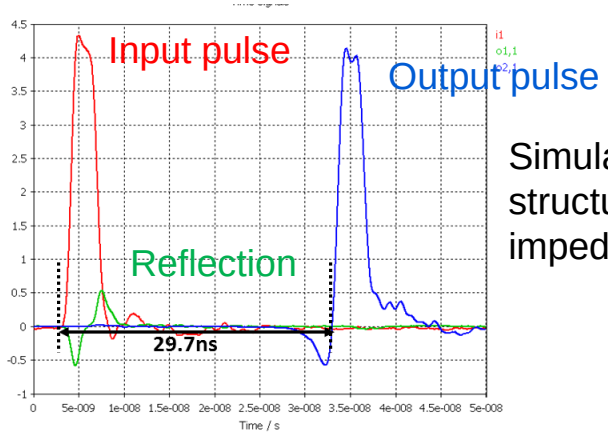

Simulation of the structure with the correct impedance and β= 0.067.

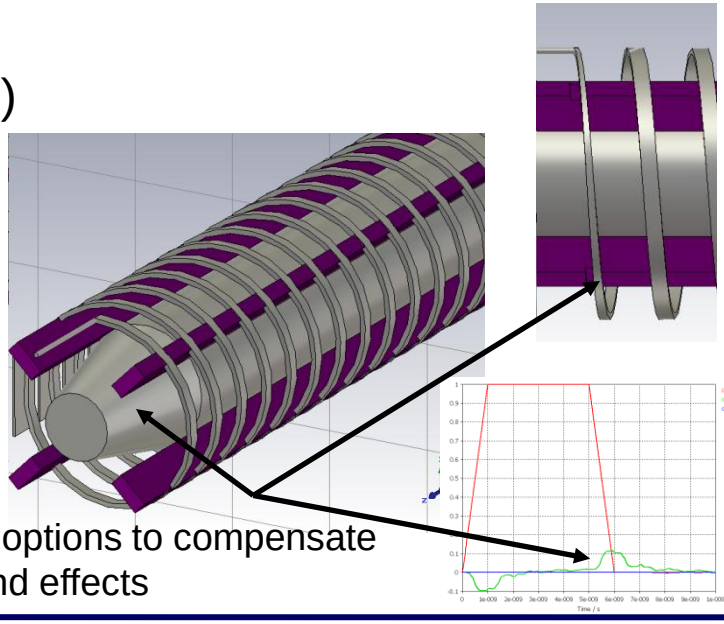

Different options to compensate for the end effects

Absorber

- The absorber should withstand 2.1 MeV X 10 mA = 21 kW focused into a spot with 2 mm rms radius
- Difficulties:
  - Thermal load, mechanical stress
  - Outgassing, blistering, sputtering
- A preliminary conceptual design of the full-scale absorber is done (C. Baffes)
  - Molybdenum alloy TZM is chosen
  - 29 mrad grazing angle
  - Thermal and stress analysis
  - Analysis of radiation, secondary particles, sputtering (Yu. Eidelman, I. Rakhno)

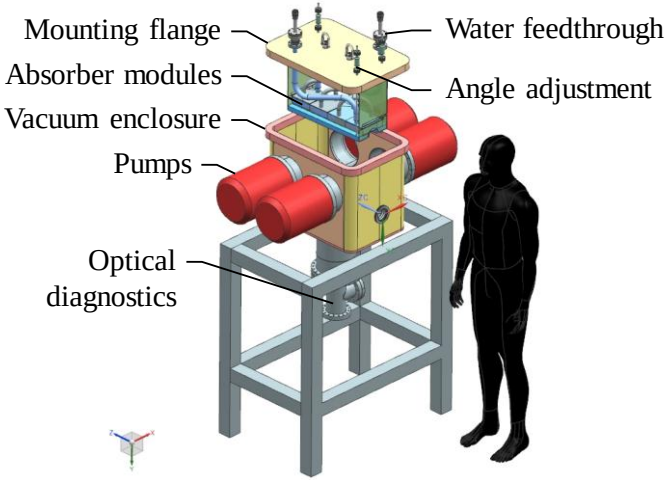

Preliminary conceptual design of the absorber

- A ¼ -size prototype will be tested with an electron beam
  - Has been designed (C.Baffes) and is being manufactured

Absorber prototype test bench

- Goal: to test thermal properties of a prototype with an electron beam at similar surface power density
  - 30 keV, 0.2A of e- vs 2.1 MeV, 10mA of H-
  - But the same power density~25 W/mm^2
    - Because of a larger grazing angle, ~120 vs 29 mrad
  - Parts mainly from the Electron Cooler
- Commissioned with a "pre-prototype"
  - A TZM brick with simple water cooling
  - Difficulties:
    - ~50% of energy is reflected
    - Cathode poisoning

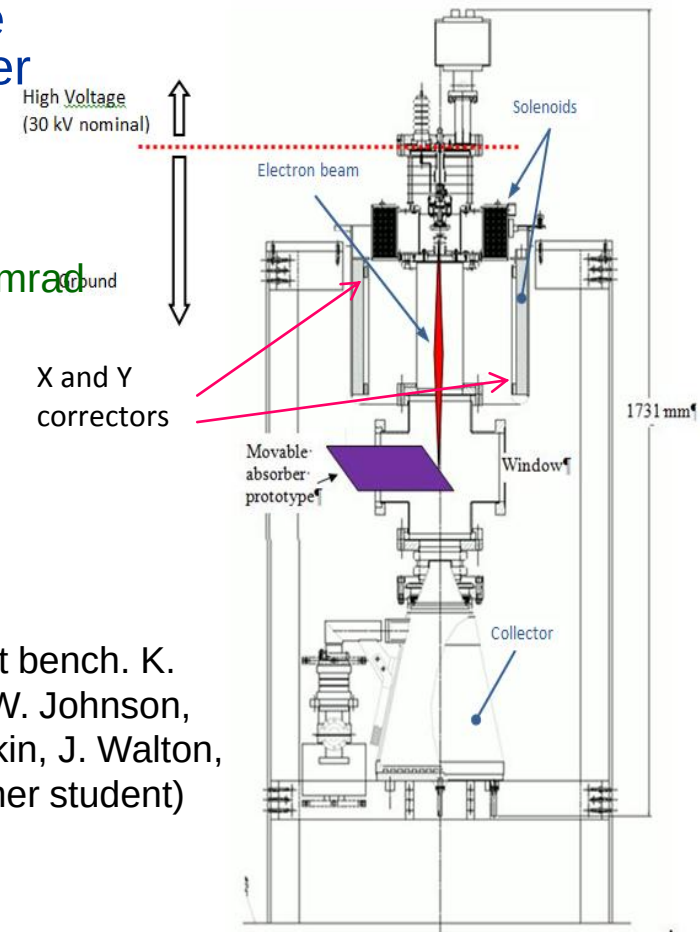

Schematic of the test bench. K. Carlson, B. Hanna, W. Johnson, L. Prost, A. Shemyakin, J. Walton, A. Mitskovets (summer student)

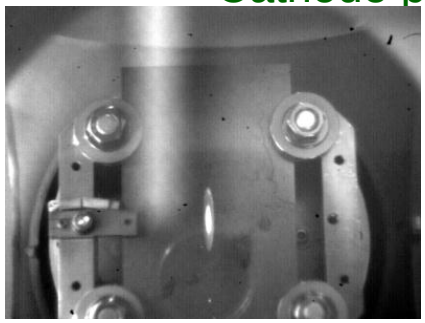

Beam OTR image at the TZM surface (R.Thurman-Keup)

Absorber prototype

Prototype assembly at the test bench

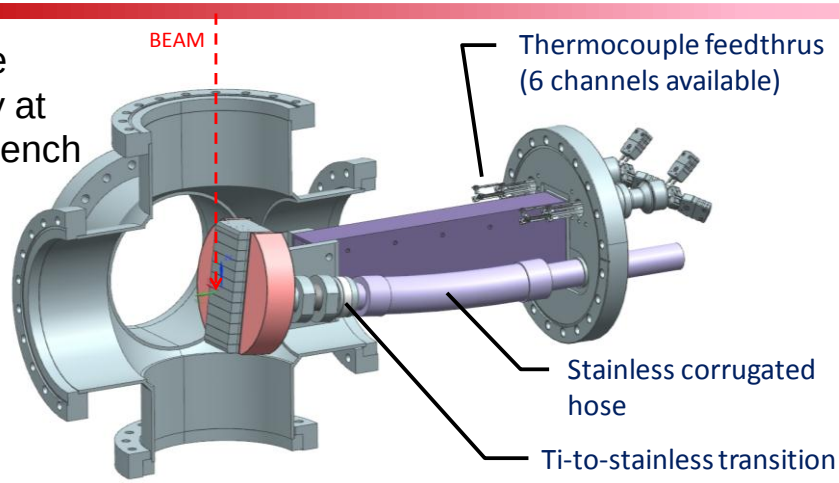

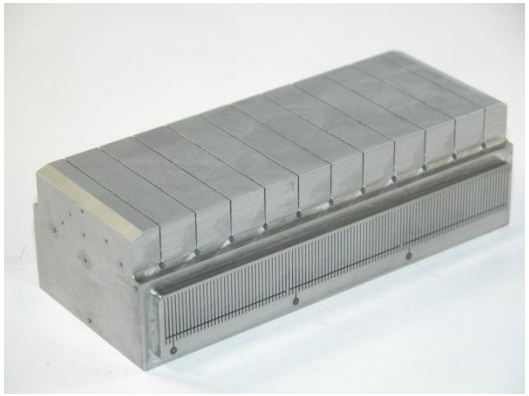

Machined central part of the prototype

- Installation at the test bench is expected in December 2012
  - All part have been machined and tested
  - Brazing is under preparation
- Temperature distribution will be recorded with 6 thermocouples and compared with simulations

Bunching cavity

- Conceptual design is done
- The technical design is being finalized
  - Discussion with a perspective vendor in parallel

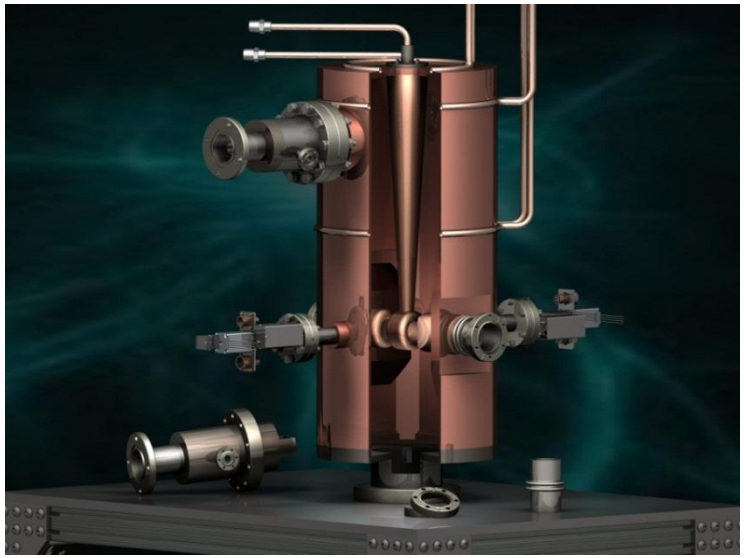

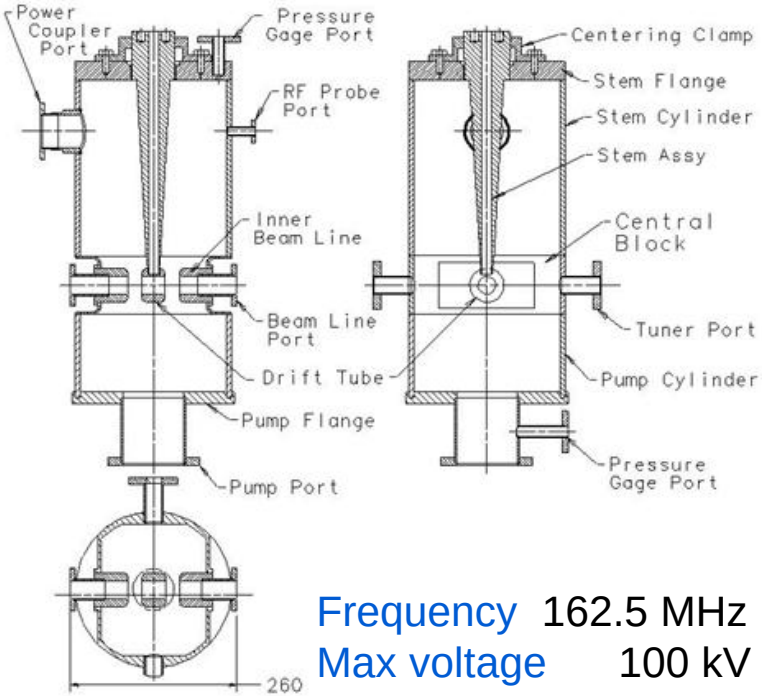

Frequency	162.5 MHz
Max voltage	100 kV
Gap	2x23 mm
Max power loss	1.5 kW

Gennady Romanov (system configuration), Ivan Gonin (RF modeling) Timergali Khabiboulline (group leader), Meiyu Chen (mechanical analysis), Jodi Coghill (mechanical designer), Iouri Terechkine (integration, fabrication)

Other subsystems

- Quadrupoles
  - Magnetic design is in progress (Vl. Kashikhin)
  - Possible collaboration with India
- BPMs
  - Mechanical conceptual design (M. Alvarez)
- Vacuum system, diagnostics, machine protection systems, controls, infrastructure
  - Discussions

Summary

- No changes in MEBT specifications, scheme, or optics
- Progress is delayed by lack of resources
  - Concentration on moving ahead IS/LEBT
- R&D is being actively pursued for the absorber and kickers
  - Absorber prototype manufacturing is in the final stage
  - Absorber prototype test bench has been commissioned
  - 50 Ohm kicker is approaching the manufacturing stage
    - 3D mechanical design of 50 Ohm kicker is close to completion
    - RF and power tests of a 8-plate model were successful
  - 200 Ohm kicker is ready for mechanical design
    - Full-scale RF simulations of the structure are mostly done
    - Preliminary solutions for 200 Ohm hardware are found
  - 200 Ohm kicker driver is under development
- Bunching cavity technical design is almost complete
- Quadrupoles – magnetic design

Plans for FY2013

- Kicker
  - Finish the design, manufacture, and test (without beam) 50 Ohm structure
  - Design and manufacture 200 Ohm structure
  - Design and test a prototype of the 200 Ohm kicker driver
- Absorber
  - Finish manufacturing and test the prototype
  - Finish conceptual design of the final absorber
- Bunching cavity
  - Prepare production drawing and, if money allows, begin production of a prototype
- Quadrupoles
  - Design, manufacture, and test a prototype

Plans for FY2013 (cont.)

- Diagnostics
  - BPMs : manufacture a pickup prototype (to be assembled with quadrupoles)
  - Emittance monitor: conceptual design
  - other diagnostics: write down specifications
- Scrapers – conceptual design
- Prepare a detailed proposal for measuring the beam from RFQ and testing MEBT prototypes with H- 2.1 MeV beam

Backup slides

MEBT Functional Requirement Specification

Beamline height from the floor	1.3m
Ion type	H-
Input beam energy	2.1 (+/-1%) MeV
Nominal output energy (kinetic)	2.1 (+/- 1%) MeV
Maximum frequency of bunches	162.5 MHz
Nominal Input Beam Current	5 mA
Beam Current Operating Range	1- 10 mA
Nominal Output Beam Current	1 mA
Nominal Charge per Bunch	30 pC
Residual Charge of Removed Bunches	< 10-4
Beam Loss of pass through bunches	< 5%
Nominal Transverse Emittance	0.27 mm mrad
Nominal Longitudinal Emittance	0.8 eV-µs
Longitudinal Emittance Tolerance	<10% increase over input
Transverse Emittance Tolerance	<10% increase over input
Beam Displacement at exit	< +/- 0.5mm
Beam angle at exit	< 0.5 mrad
Scraping to transverse emittance (n, rms, pulsed mode for 10W avg beam power)	<0.05 mm mrad

- The MEBT creates the final time structure of the PXIE beam, chopping ~80% of the beam with a wideband chopper. The MEBT allows for **bunch by bunch selection**, using a programmable cyclical buffer.
- Specifications are stable since Oct 2011

MEBT optics

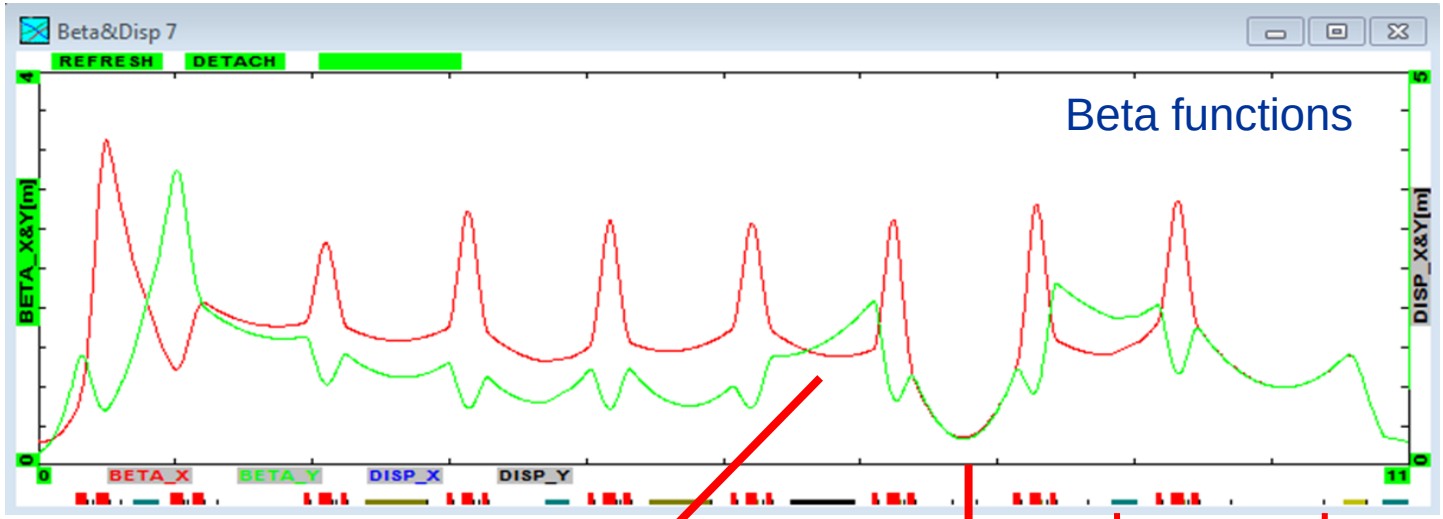

Matching from RFQ to MEBT

Increased beam size at absorber

Small orifice for differential pumping

Matching from MEBT to HWR

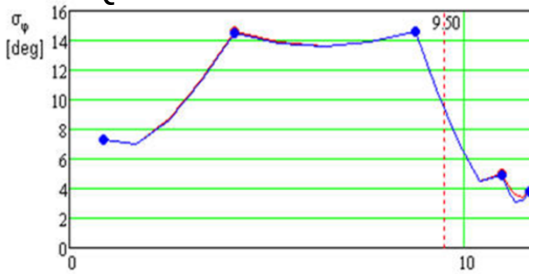

1-sigma longitudinal size of the beam in MEBT, degree of 162.5 MHz

V. Lebedev

Beam chopping

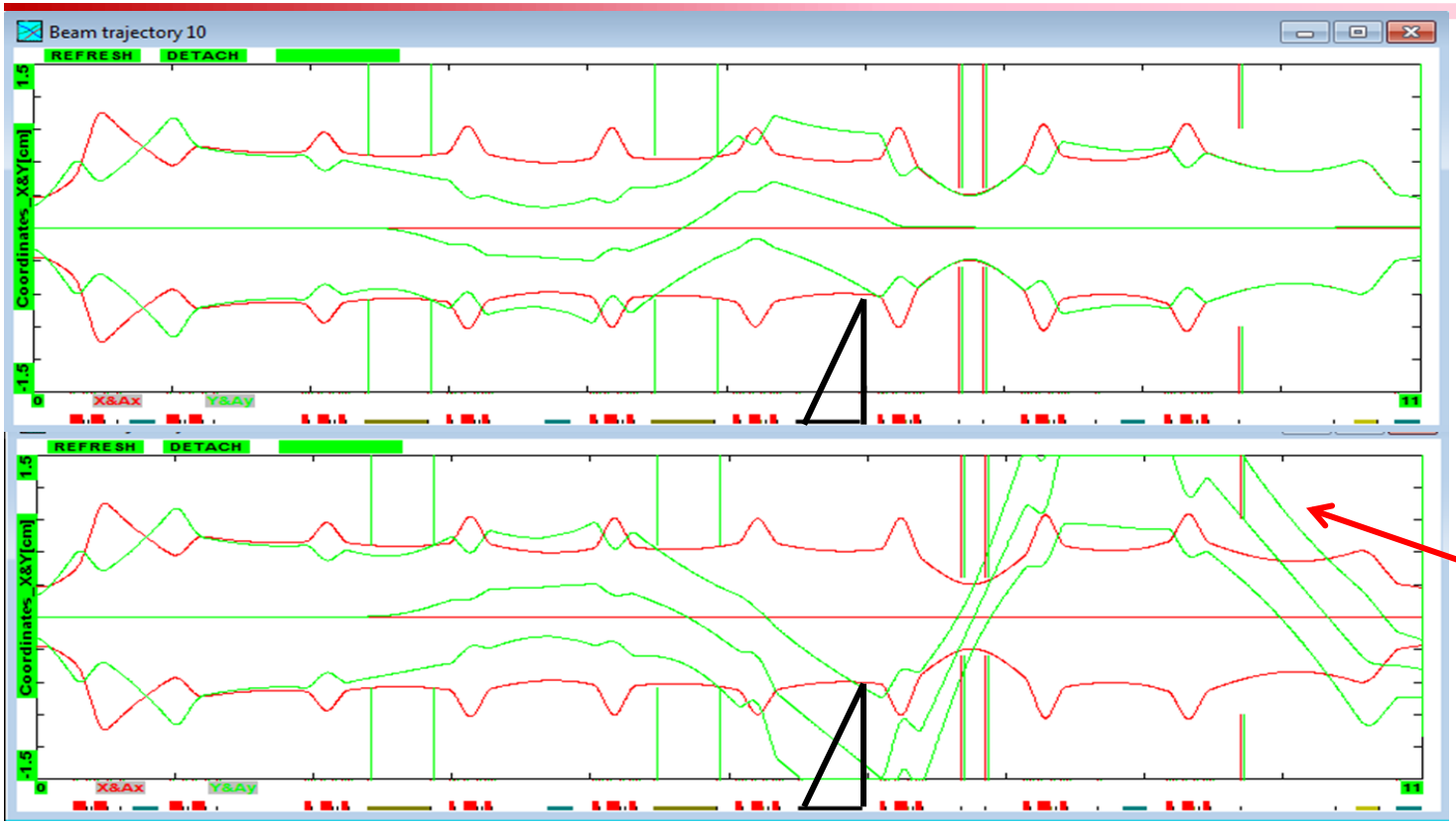

Trajectory of the removed bunches downstream the absorber is an artifact

- Beam trajectory and 3σ envelope at for passing (top) and removed (bottom) bunches

V. Lebedev

Comparison of kicker schemes

Impedance	50 Ohm	~200 Ohm
Kicker structure	Plates connected with coaxial cables	Helix with attached plates
Driver	Commercial linear amplifier fed by a pre-distorted signal	A fast switch (being developed at FNAL and SLAC)
Advantages	Commercial amplifier, feedthroughs, loads, cables	DC coupling; potentially lower cost
Kicker status	Mechanical design	EM and mechanical design
Driver status	Tested at 240 V ptp. Full-power amplifier can be purchased.	Switch tested at 500 V ptp.

Absorber test bench: outgassing

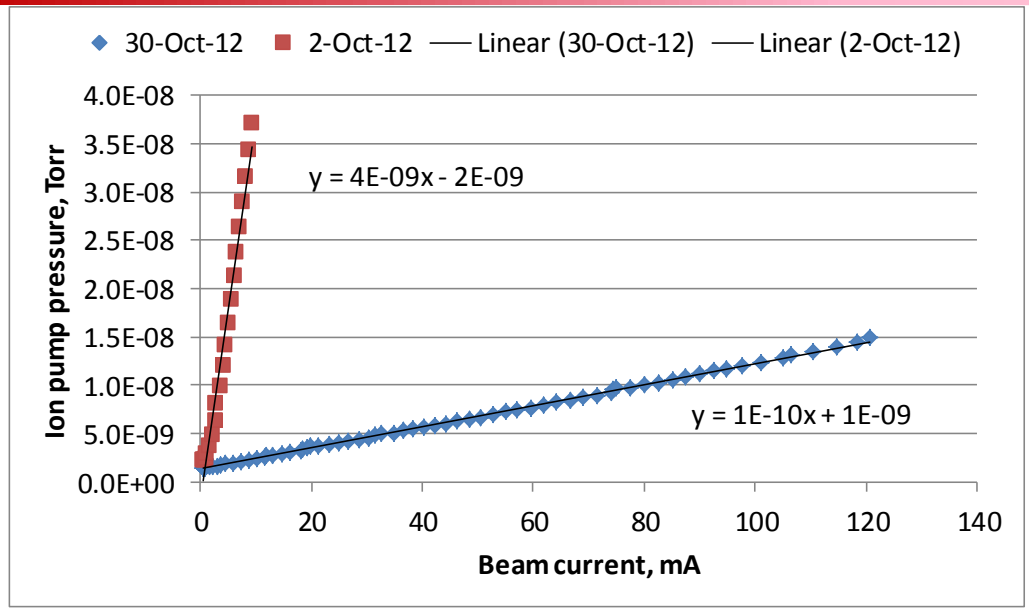

Vacuum in the gun as a function of the beam current at the pre-prototype

First beam at the absorber pre-prototype (18-Sep-2012): ~5.E-8 Torr/mA

- Limits the cathode emission
  - Started at < 1 mA
- Coefficient of outgassing dropped by ~500 times after long runs (days) of beam to the absorber
  - Estimation of the gas coming to the turbo: electron-stimulated desorption dropped from ~0.5 to~10^{-3} molecule/e
  - Likely comes mostly from surfaces irradiated by secondary electrons