Experimental modeling of a Magnetron Transmitter for Superconducting Intensity Frontier Accelerators

Technical notes

G. Kazakevich, V. Yakovlev,
R. Pasquinelli, B. Chase,
G. Flanagan, F. Marhauser
and D. Wolff
7/02/2012

Muons, Inc.

Fermilab

► RF sources powering the Superconducting Cavities (SC) of the intensity frontier accelerators of protons or ions have to be loaded with a narrow bandwidth resonance loads.

- ♦ The ILC-type cavity for the Project X pulsed Linac loaded by 1 mA beam at $Q_{ext}=1.3\cdot10^7$ has bandwidth of 100 Hz
- ♦ The ILC-type cavity for the Project X pulsed Linac has the bandwidth of the acoustic oscillations (microphonics) ~ tens of Hz and bandwidth of the oscillations caused by Lorentz-force ~ of hundred Hz.

► The mechanical oscillations are independent for each individual SC; they cause oscillation of the phase of the accelerating field in the SC.

► The state of the art technique damping the phase oscillations electronically is based on a slow phase control (in the accelerating frequency domain) of the RF source powering the SC. Moreover one needs a management of the SC feeding power to keep optimized the phase and the amplitude of the accelerating voltage, [1-3].

► Thus a simple concept to power chain of the cavities from phase-locked magnetrons, [4], is not applicable to the intensity frontier SC accelerators.

► Feeding of each cavity from individual RF source allowing to control the phase and the power prevents enlargement of the beam emittance, [5], that is not desirable for acceleration of non-relativistic or weakly relativistic particles. The enlargement may lead to losses of beam.

- Traditional RF linear amplifiers as klystrons, IOTs and high-power solid-state amplifiers can provide the required phase and amplitude control, however the cost of the RF system to power the multi-cavity intensity frontier accelerators at power level of tens to hundreds kW per the SC should be very high.
- CW magnetrons based on commercial prototypes are considered as potentially lower cost RF sources.
- We propose concept of a high-power transmitter based on 2-stage frequency-locked magnetrons for individual powering of the SC of the intensity frontier accelerators. The concept and results of it experimental modelling are considered here.

The proposed concept background

The concept is based mainly on the theoretical and experimental study of operation of the 2.5 MW pulsed S-band magnetron locked with a slow varying frequency. The magnetron powered the accelerating cavity of a microtron-injector of a Terahertz FEL. The locking signal with level of -18 dB was a wave reflected from the accelerating cavity and passed through non-reciprocal ferrite isolator into the magnetron, [6-8]. The transient process in the magnetron-accelerating cavity system has been numerically simulated to compute the magnetron frequency vs. the locking frequency in time domain. In the simulation the magnetron was considered as a forced oscillator. Measurements with down-conversion technique, [ibid], were in good agreement with the simulation. The simulation and measurements showed that the frequency-locked magnetron may provide phase instability approximately of ± 1 degree.

Numerical simulations background

► A math. model of a magnetron considering it as a forced oscillator locked with a slowly varying frequency has been developed for simulation of transient process, [6-8].

► A system of abridged equations describing transient process in the magnetron and in the frequency-locking source (the accelerating cavity in the microtron serving as an external stabilizing cavity for the magnetron) was numerically solved at the simulation.

► Results of the simulation for a 2.5 MW S-Band pulsed magnetron were in good agreement with the magnetron frequency deviations measured in time domain [ibid].

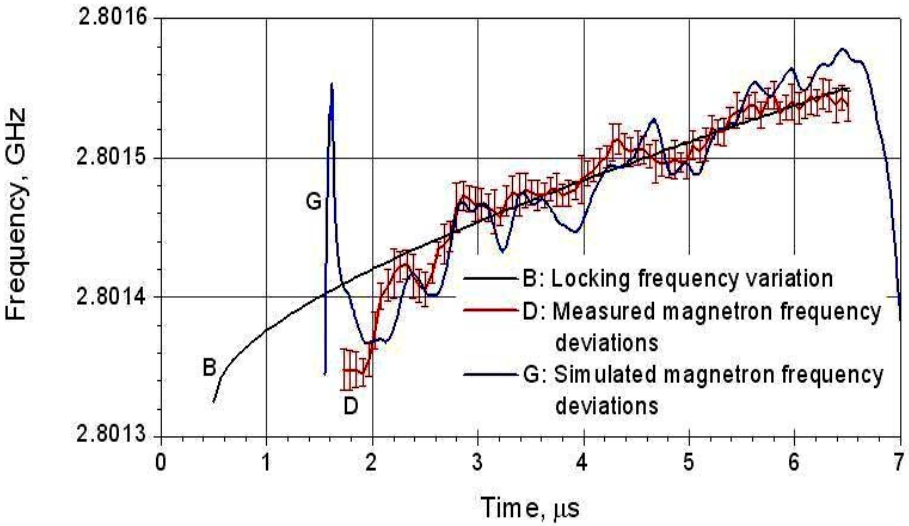

Fig. 1. Variation of the simulated, curve G, and measured magnetron frequency, curve D, vs. the locking frequency, curve B.

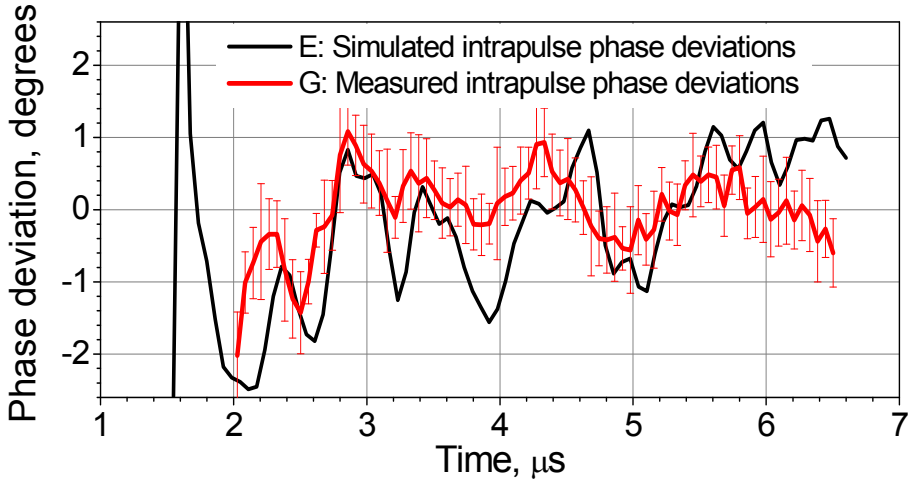

Fig. 2. Phase deviations of the 2.5 MW S-band frequency-locked magnetron feeding a 7 MeV microtron-injector of a FEL operating on 1000-d magnetron harmonic

Muons, Inc.

Fermilab

► Analysis of the obtained results showing that phase instability of the frequency-locked magnetron is in the range of ± 1 degree and recent experiments with CW, low-power, S -Band magnetron, [9, 10], motivated our concept of a High-power Magnetron Transmitter based on frequency-locked 2-stage magnetrons with outputs combined by a 3-dB hybrid combiner for the intensity frontier superconducting accelerators, [11].

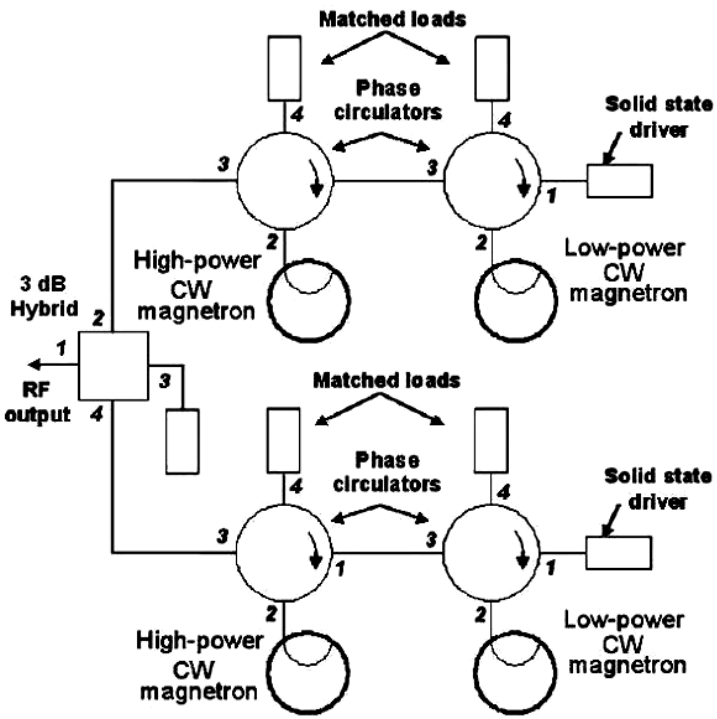

Fig. 3. Conceptual scheme of the CW magnetron transmitter based on 2-stage magnetrons available for a fast control in power and phase.

► The transmitter is intended to drive SC of the intensity frontier accelerators with damping of mechanical noises through electronically controlled phase and power with a LLRF system.

► The transmitter has been proposed in assumption of reach the output power to locking power ratio, P_{Out}/P_{Lock} ~ 30÷40 dB at the bandwidth of phase and power control at least of few tens kHz to suppress the mechanical noises.

► To model the transmitter we have used CW 2.45 GHz commercial magnetrons with output power up to 1 kW operating in pulsed mode with a long pulse duration (to demonstrate availability for the Project X).

► An experimental facility modeling the magnetron transmitter has been developed, built and was used to study the transmitter parameters.

Muons, Inc. Fermilab

► The experimental facility modeling the transmitter includes:

♦ A pulse modulator to feed one or two CW 2.45 GHz magnetrons operating in pulsed regime,
♦ HV power supply to feed the modulator,
♦ Two magnetron modules available for operation at the same locking frequency, RF synthesizer and TWT amplifiers as a locking RF sources for the magnetrons,
♦ RF components for measurements and control of the frequency-locked magnetrons.

The modulator with partial discharge of storage capacity C_c feeding single or 2-stage (cascade) frequency-locked magnetron provides pulsed voltage controlled in the range of 1÷5 kV at the pulse duration 1÷10 ms at the repetition rate of 0.25 Hz.

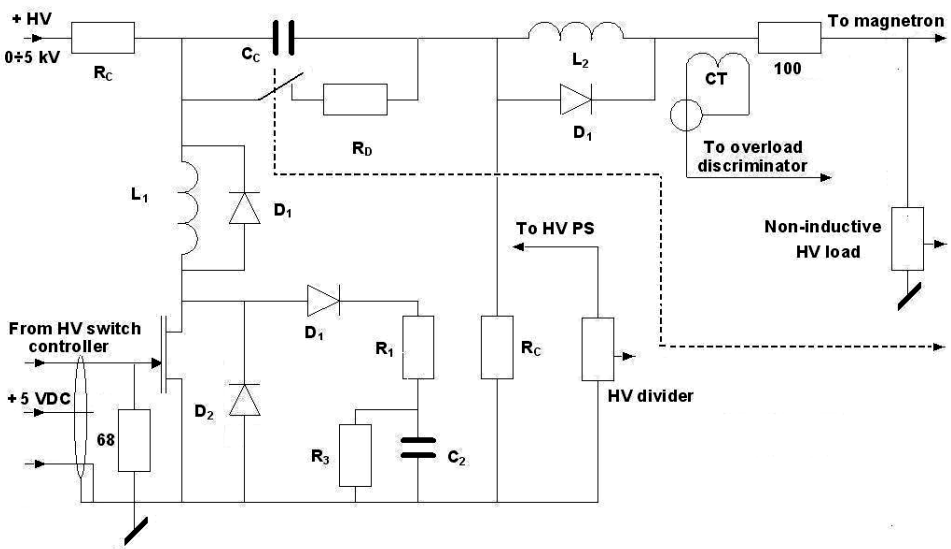

Fig. 4. The Low-ripples pulsed modulator HV circuit diagram

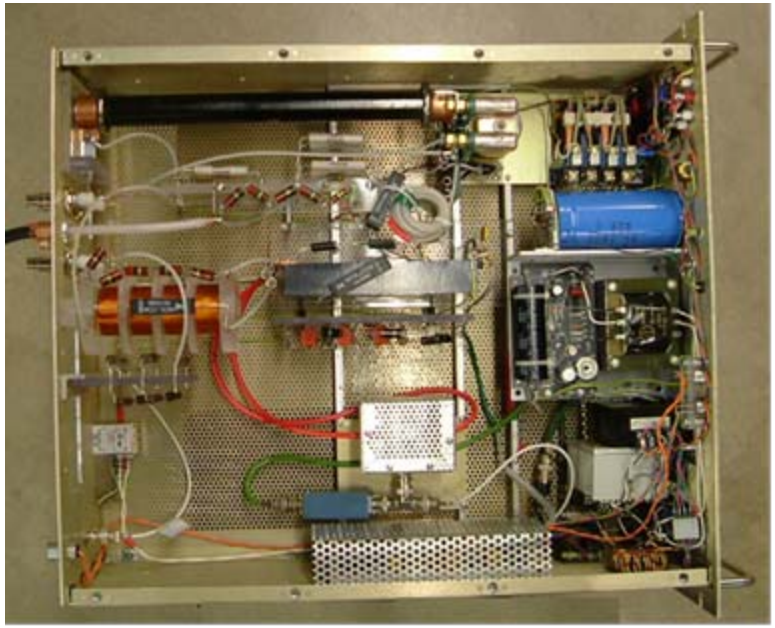

Fig. 5. The modulator unit photo

Muons, Inc.

Fermilab

► Experimental setup with a single-stage frequency-locked magnetron

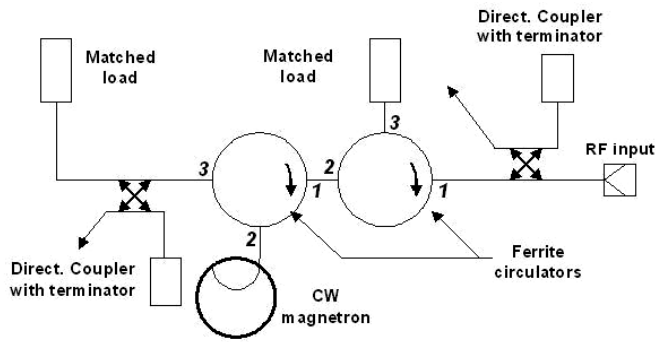

Fig. 6. A single-stage CW magnetron experimental module operating as a pre-excited frequency-locked oscillator.

Locking frequency: F_{Lock} = 2.4568 GHz.
Pulse duration : t_{Mag} = 8 ms
Output peak power: $P_{Mag} \approx$ 580 W.
Locking power: $P_{Lock} \approx$ 7.3 W,
$P_{Mag}/P_{Lock} \approx$ 19 dB.

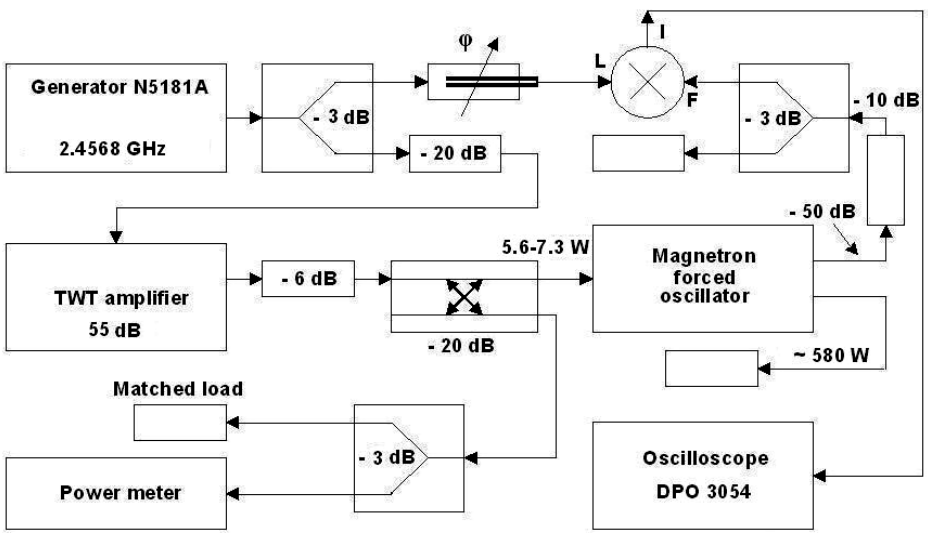

Fig. 7. Setup for measurements of intrapulse phase deviations of the pre-excited frequency-locked CW magnetron operating in pulsed mode

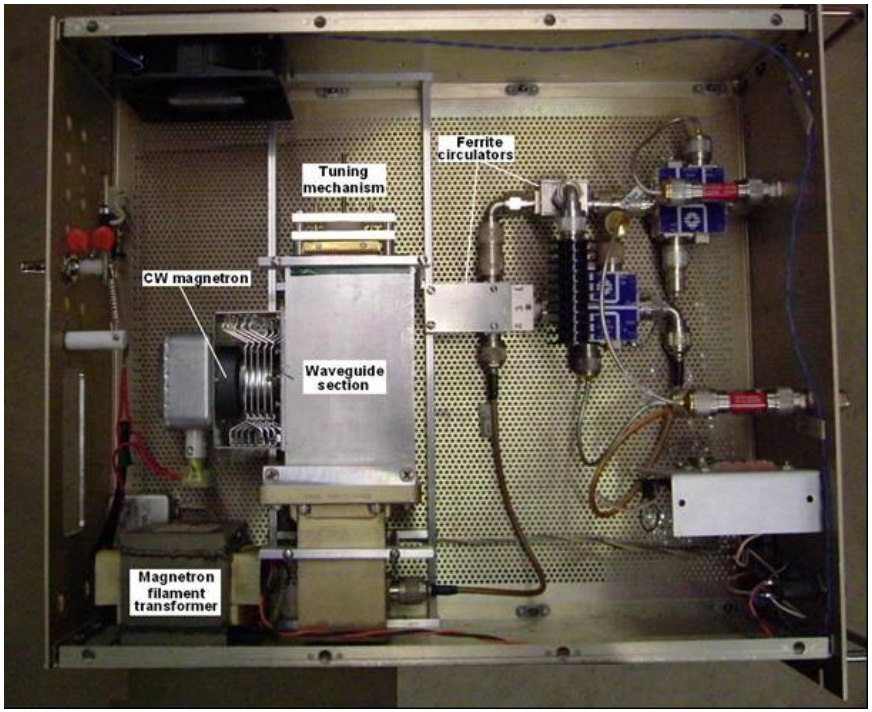

Fig. 8. Photo of a single CW magnetron module for a work in frequency-locked mode

Muons, Inc.

Fermilab

► Intrapulse phase instability of a single-stage frequency-locked magnetron

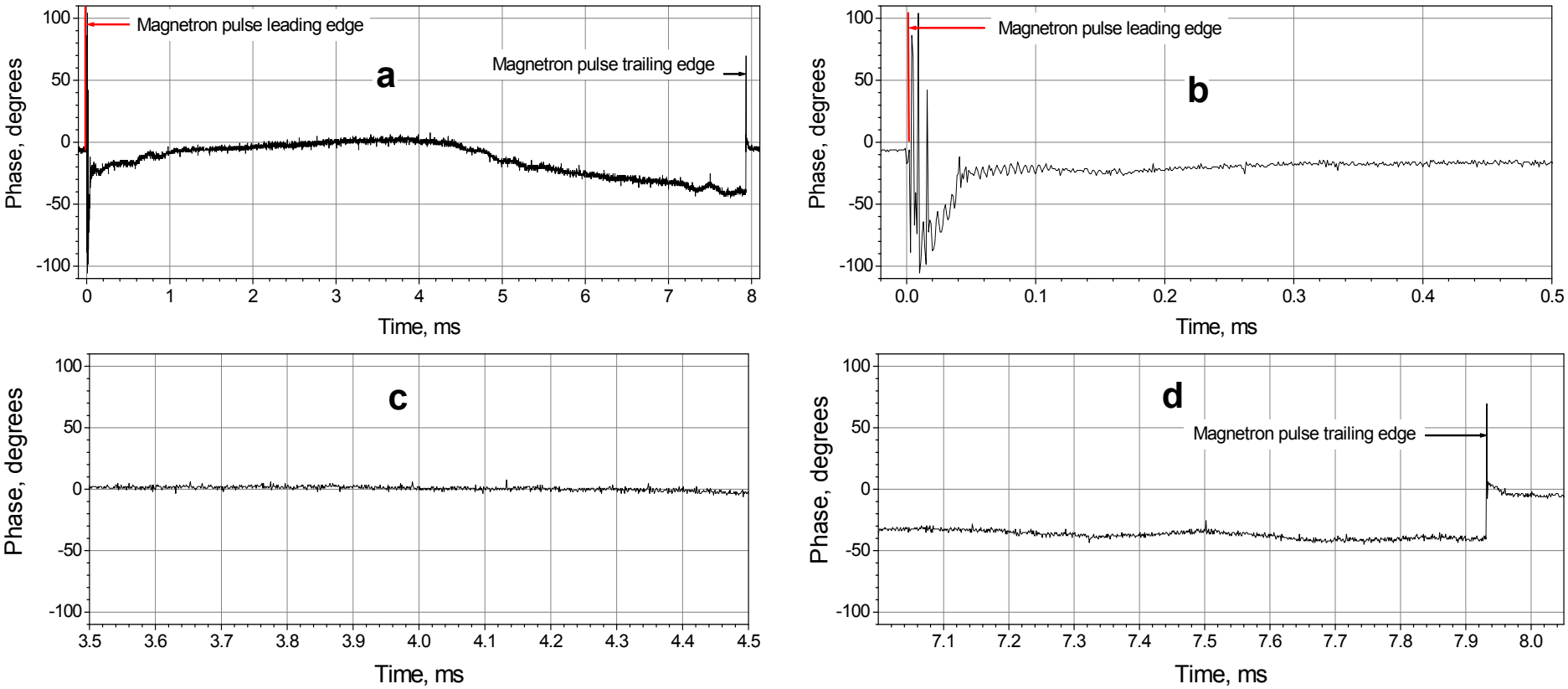

Fig. 9. Measured phase deviations of the frequency-locked CW magnetron at pulse duration of 8 ms.

Instantaneous phase noise of the single stage magnetron is in range of few degrees, measured ratio of the peak power to noise in the magnetron spectra is at least 50 dB. Ratio of the magnetron output power to locking power of ≈ 19 dB has been obtained in ordinary regime at pulse duration of 8 ms. Measured time-to-lock for single stage, pre-excited, frequency-locked magnetron of ≤ 50 μs is acceptable to drive superconducting cavity.

Muons, Inc. Fermilab

► Measurement of bandwidth of the phase control for the frequency-locked CW magnetrons operating in pulsed regime.

The synthesizer, Fig. 7, operated with a phase modulation, at the amplitude of 20 degrees at various modulation frequencies. Limitation of the bandwidth of the frequency-locked magnetron becomes apparent in appearance of oscillation with a frequency equal to the frequency of the phase modulation. The oscillation overlaps on the interferometer phase trace, Fig. 8. The measured frequency characteristic of the phase control is shown in Fig. 9.

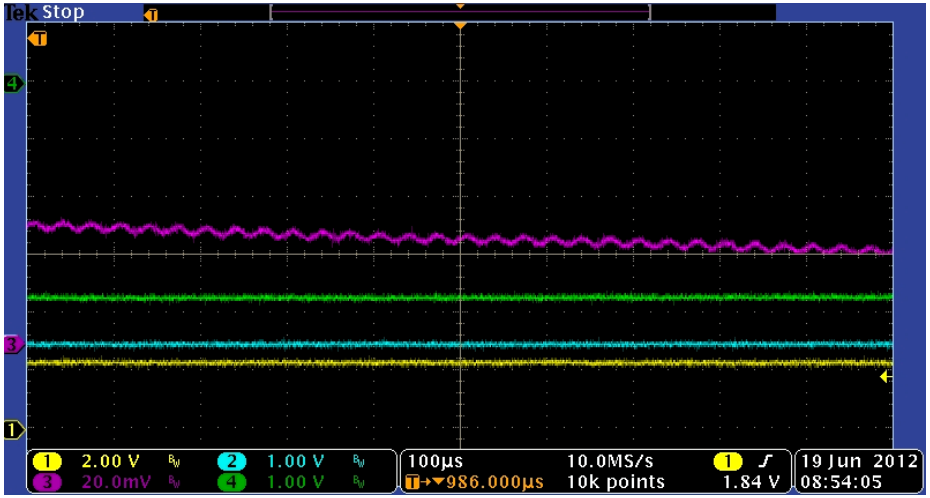

Fig. 10. Interferometer trace (pink color) at the phase modulation with the frequency of 30 kHz. The scales are: 20 mV/div and 100 µs/div, respectively.

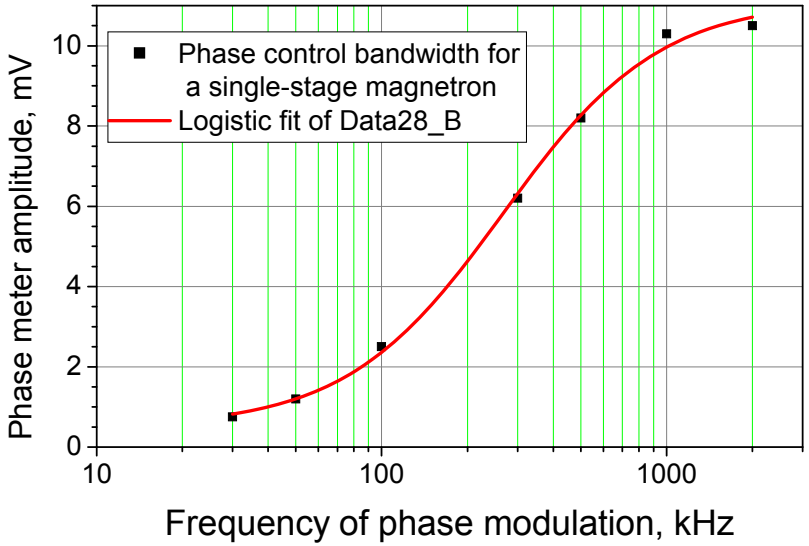

Fig. 11. Amplitude of the phase modulation on the interferometer trace vs. the modulating frequency.

On 3-dB level the frequency-locked single-stage magnetron has bandwidth of the phase control of ~ 300 kHz.

Muons, Inc. Fermilab

► Experiments with a two-stage (cascade) frequency-locked magnetron

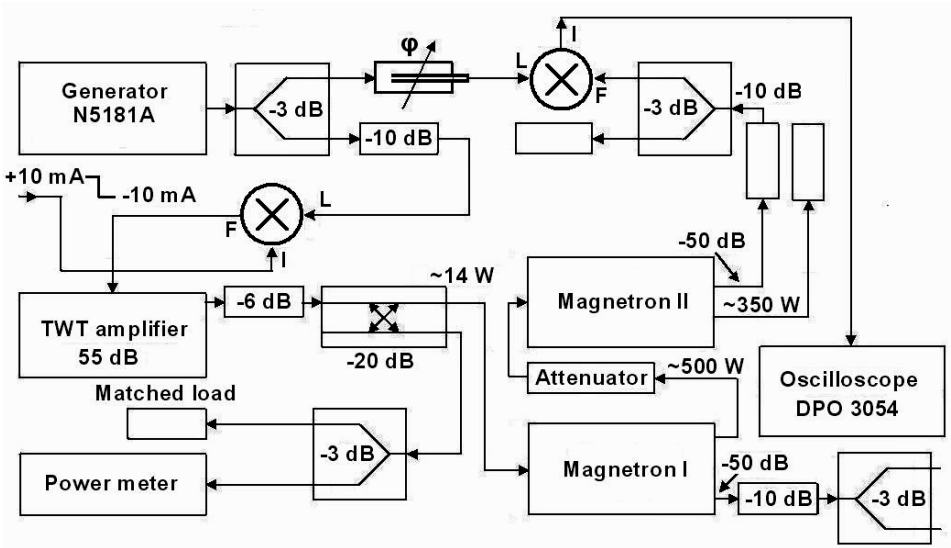

Fig. 12. Experimental setup to study 2-stage magnetron.

Modelling of the 2-stage magnetron operation, combined from two identical single-stage magnetron modules was performed at pulse duration of 5 ms.

A passive compensated HV divider has been used in this setup to feed one of magnetrons with a lower pulse voltage. The divider was fitted to provide concurrent operation of both of magnetrons with the single modulator.

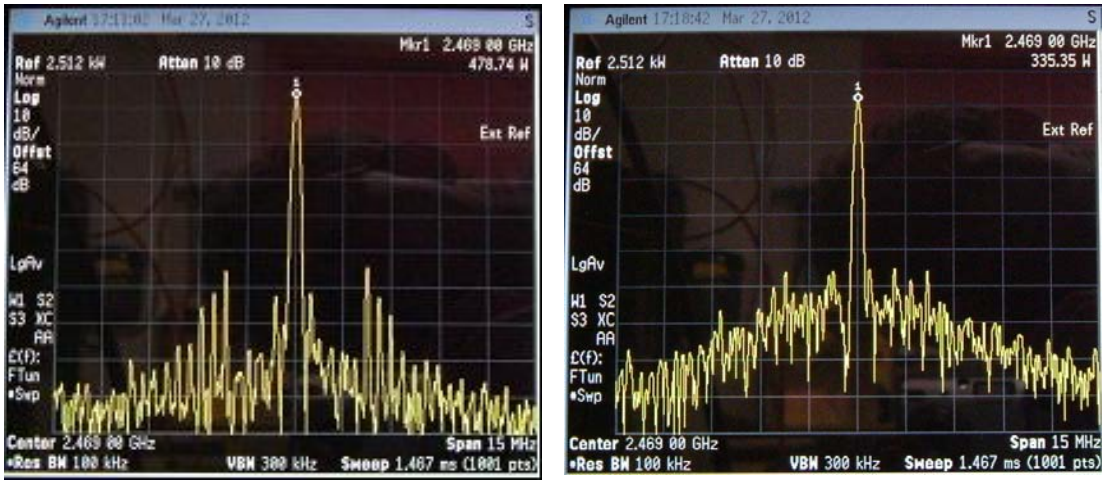

Fig. 13. Spectra on the first and second magnetron outputs, respectively

An attenuator between both stages of the 2-stage magnetron was used to lower the locking signal in the second magnetron.

The measurements were performed at values of the attenuator of -20 dB and -13 dB corresponding to the ratio of $P_{Out\text{-}II}/P_{Lock\text{-}I} \approx 33.5$ dB and 26.5 dB, respectively.

Muons, Inc. Fermilab

► Phase deviations of the 2-stage (cascade) magnetron at pulse duration of 5 ms.

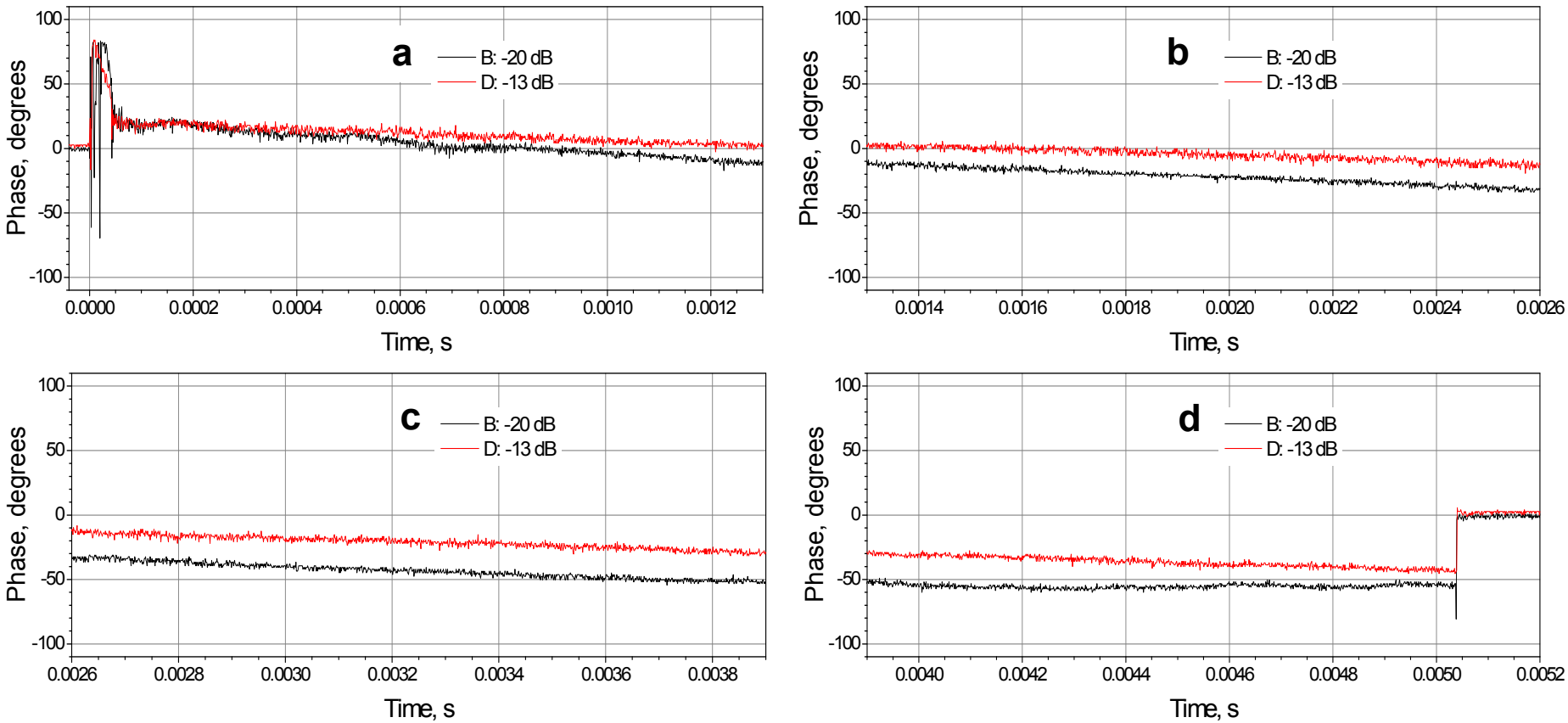

Fig. 14. Phase deviations of the 2-stage (cascade) frequency-locked magnetron vs. the attenuator value.

Instantaneous phase noise of the 2-stage magnetron is in range of few degrees; measured ratio of peak power to noise in the magnetron spectra is ≥ 45 dB. The magnetron output power to locking power ratio of ≈ 33.5 dB has been measured in ordinary regime at pulse duration of 5 ms. Time-to-lock for the 2-stage frequency-locked magnetron is ≤ 50 μs.

Muons, Inc. Fermilab

An additional mixer in inverse connection providing a fast 180 deg. jump of phase has been used to measure time response of the 2-stage magnetron. Measured transient time of ~ 200 ns points to the bandwidth up to few MHz available for the phase control of the 2-stage (cascade) magnetron. It demonstrates availability of the proposed magnetron transmitter to feed SC suppressing “microphonics” with a LLRF phase control system.

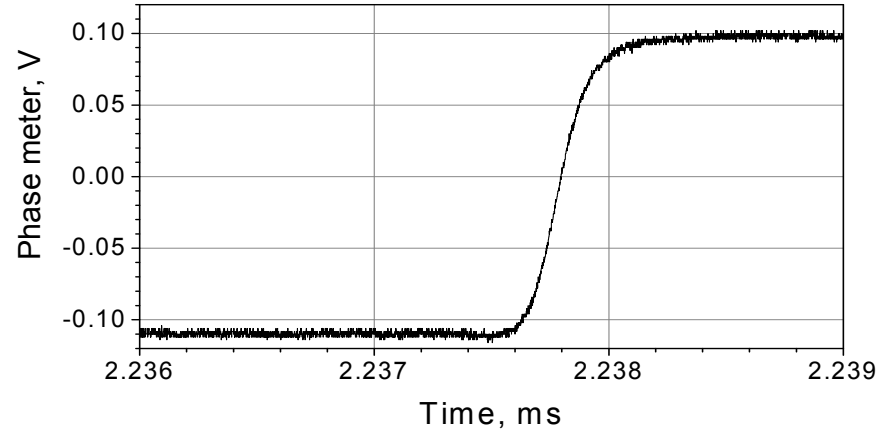

Fig. 15. Response of the frequency-locked 2-stage magnetron on a fast 180 degrees phase jump.

► **Power combining with a 3-dB hybrid in the Magnetron Transmitter**

► In this set of measurements we have studied operation of the frequency-locked magnetrons with a 3-dB hybrid combiner to provide a fast control of output power of the Transmitter.

► We also measured bandwidth of the phase control of the frequency-locked single-stage magnetrons without the 3-dB hybrid combiner and with the combiner.

Muons, Inc. Fermilab

► Two modules with single-stage frequency-locked magnetrons have been used to verify combining of the output powers with a phase control of the combined power.

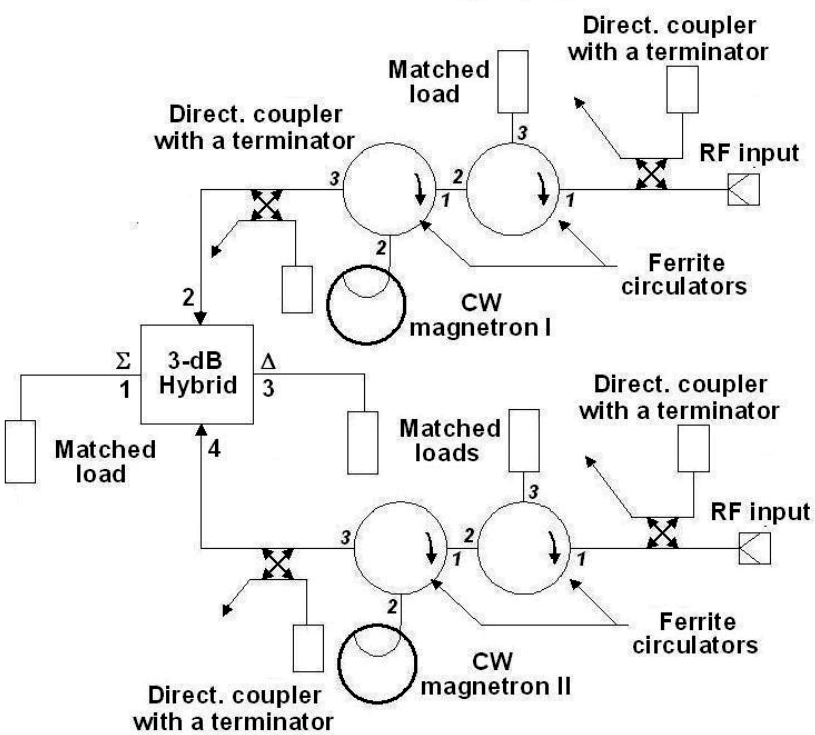

Fig. 16. Combining of power of single-stage magnetrons with a 3-dB hybrid

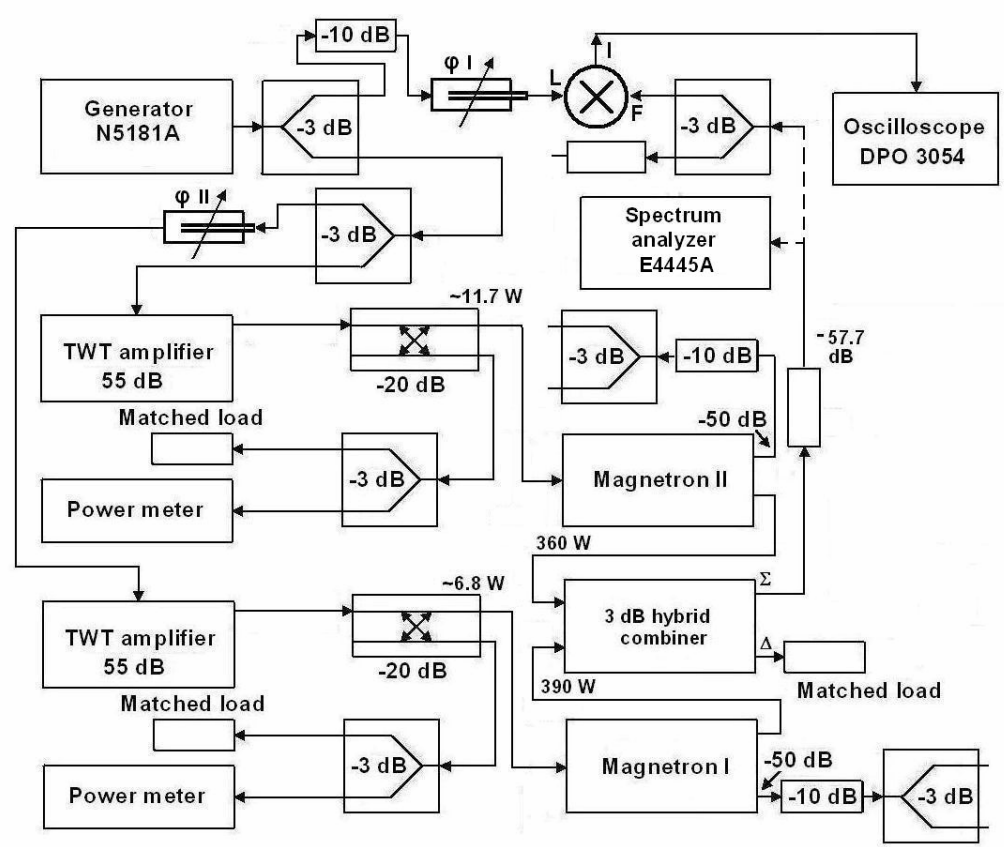

Fig. 17. Scheme to measure the combined power.

Muons, Inc.

Fermilab

► Combining of output power with a phase control

Impact of non-identical magnetrons power on the output power and efficiency of the combining has been analyzed analytically. The output power on the ports #1 and #3 vs. ratio of the power on the ports #4 and #2 has been computed for an ideal 3-dB 90^0 hybrid. Resulting traces and computed efficiency of the power combining, $\eta = P_1/(P_2+P_4)$, are plotted in Fig. 18.

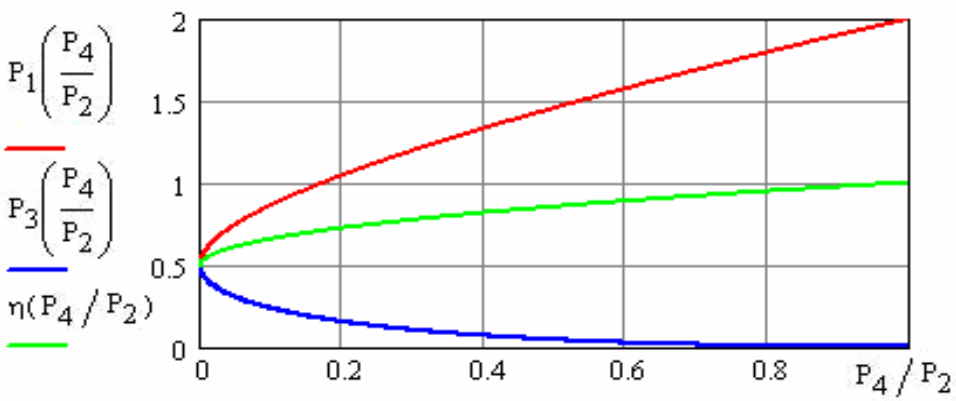

Fig. 18. Computed power on the 3-dB 90^0 hybrid output ports and the combining efficiency vs. ratio of power P_4/P_2 on it input ports.

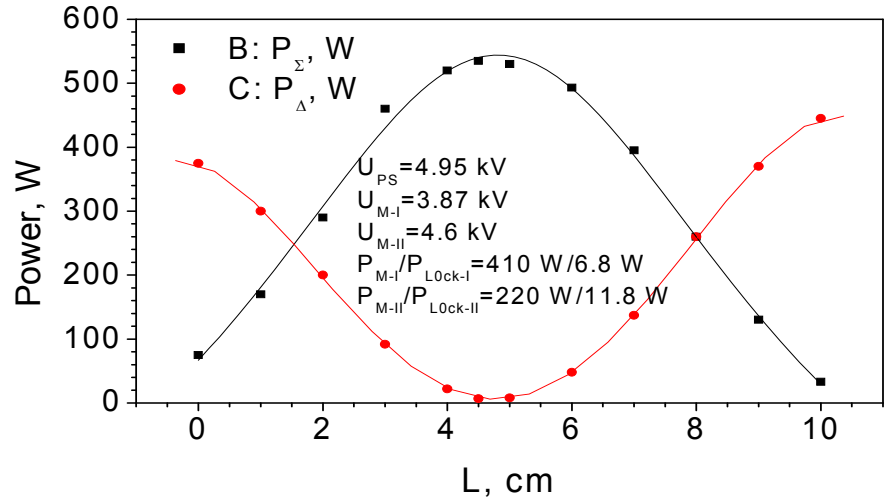

Fig. 19. Measured power combined with a 3-dB, 180 degrees combiner vs. the phase difference (length of trombone φ II, Fig. 17) on inputs of the frequency-locked magnetrons.

Muons, Inc. Fermilab

► Phase stability of the frequency-locked magnetrons with combined outputs

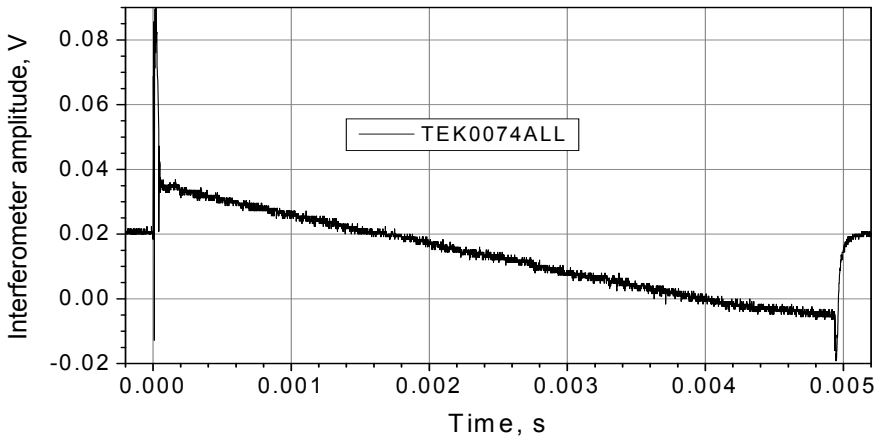

Fig. 20. Interferometer trace on the output of the 3-dB hybrid combiner. Calibration is ~1 deg/mV.

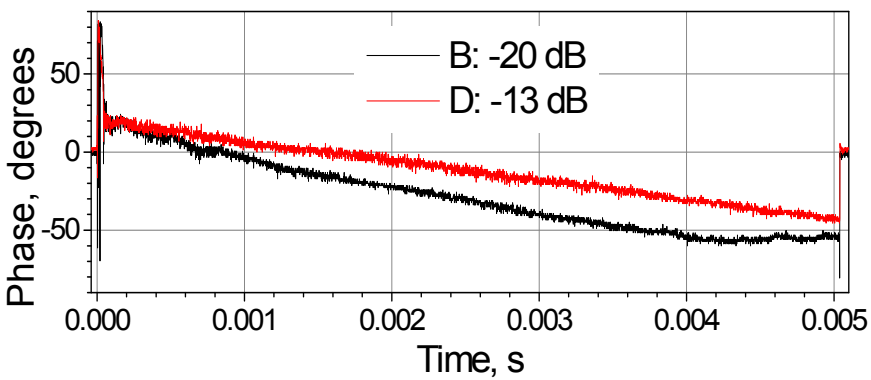

Fig. 21. Phase traces on the output of the 2-stage frequency-locked magnetron.

The phase trace obtained combining output power of the two single-stage frequency-locked magnetrons is similar with acceptable accuracy to traces measured with the 2-stage frequency-locked magnetron. The phase trace slopes are caused by a frequency pushing in the frequency-locked magnetrons because of a discharge (by ~0.5%) of the storage capacitor during the pulse of the modulator.

The phase trace obtained combining output power of the two single-stage frequency-locked magnetrons is quite smooth; the instantaneous noises are less than few degrees. This demonstrates applicability of the proposed Magnetron Transmitter concept with a 3-dB hybrid combiner to feed the SC.

Muons, Inc. Fermilab

► Measurement of bandwidth of the phase control for the frequency-locked CW magnetrons operating in pulsed regime.

The measurements were performed as it is shown in scheme, Fig. 17.

The synthesizer operated with a phase modulation with amplitude of 20 degrees at various modulation frequencies. The 3-dB hybrid combiner output signal was compared with the synthesizer signal in the interferometer φ I. The trombone φ II was tuned to get maximum power on the 3-dB hybrid output at zero frequency of the phase modulation. The frequency characteristic of the phase control is shown in Fig. 22.

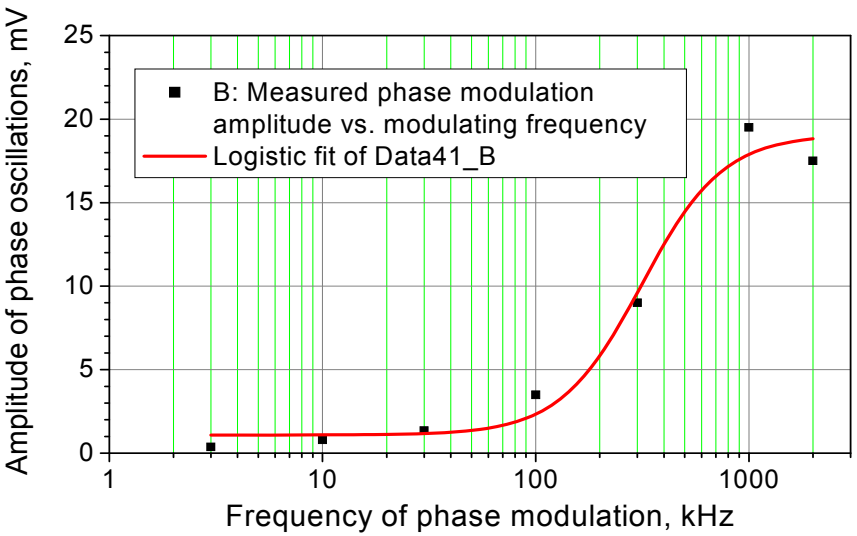

Fig. 22. Amplitude of the phase modulation on the interferometer trace vs. the modulating frequency.

On 3-dB level the two frequency-locked single-stage magnetrons with a 3-db hybrid combiner have bandwidth of the phase control of ~ 300 kHz. The single frequency-locked magnetron has approximately the same bandwidth of the phase control.

This value corresponds to the measured response of the 2-stage magnetron of ~ 200 ns on a fast 180 deg. phase jump.

Muons, Inc. Fermilab

Summary

► A concept of a Transmitter based on 2-stage frequency-locked magnetrons with a fast control in phase and power, to feed the Superconducting Cavities of the GeV-scale intensity frontier proton/ion accelerators has been proposed.

► A strategy of the experimental modeling of the transmitter and the experimental techniques realizing the modeling have been developed.

► The techniques components have been developed, designed and put into operation.

► An experimental technique for the measurements has been developed, built and utilized for measurements.

► A concept of the 2-stage frequency-locked magnetron with low phase noises and a fast phase control, acceptable to feed SC first in the world has been successfully realized using CW, 1 kW, S-band commercial magnetrons at ratio of output power to locking power more than 33 dB.

► A concept of a fast power control with a 3-dB hybrid acceptable for SC first in the world has been realized using CW, 1 kW, S-band commercial magnetrons.

► Bandwidth of the phase and power control of the 2-stage and single-stage magnetrons modeling the Transmitter has been measured with CW, 1 kW, S-band commercial magnetrons; on 3-dB level it is few hundreds kHz.

Muons, Inc. Fermilab

References

[1] H. Padamsee, J. Knobloch, T. Hays in RF Superconductivity for Accelerators, Wiley & Sons, Inc, 1998

[2] J.R. Delayen, “Electronic damping of microphonics in superconducting cavities”, PAC 2001, Chicago, IL, USA

[3] T.L. Grimm et al., THP66, Linac 2004, Lubeck, Germany

[4] T. Overett, et al., “Phase Locked Magnetrons as Accelerator RF Sources”, PAC 1987, Washington, DC, USA

[5] N. Solyak et al., WE101, LINAC10, Tsukuba, Japan

[6] G.M. Kazakevitch et al., NIM A 528 (2004) 115–119

[7] G.M. Kazakevich et al., PRST-AB, 12, 040701(2009)

[8] G.M. Kazakevich et al.,NIM A 647 (2011) 10-16

[9] H. Wang et al., THPEB067, IPAC10, Kyoto, Japan

[10] A.C. Dexter et al., PRST-AB,14, 032001 (2011)

[11] G. Kazakevich and V. Yakovlev,” Magnetron option for a pulse linac of the Project X,” Project X document 896, http://projectx-docdb.fnal.gov

Muons, Inc. Fermilab