DESCRIPTION: RF FIELD SHIELD BLOCK 2-HOLE -PXIE
CATEGORY: BLOCK PROJECT: ProjectXFrontEndInfraHTC

| REV | REVISION CONTROL DOCUMENT | DATES | SIGNATURES |
|---|---|---|---|
| - | F10001866---RCD | | DRAWN: |
| | | | APPROVED: |

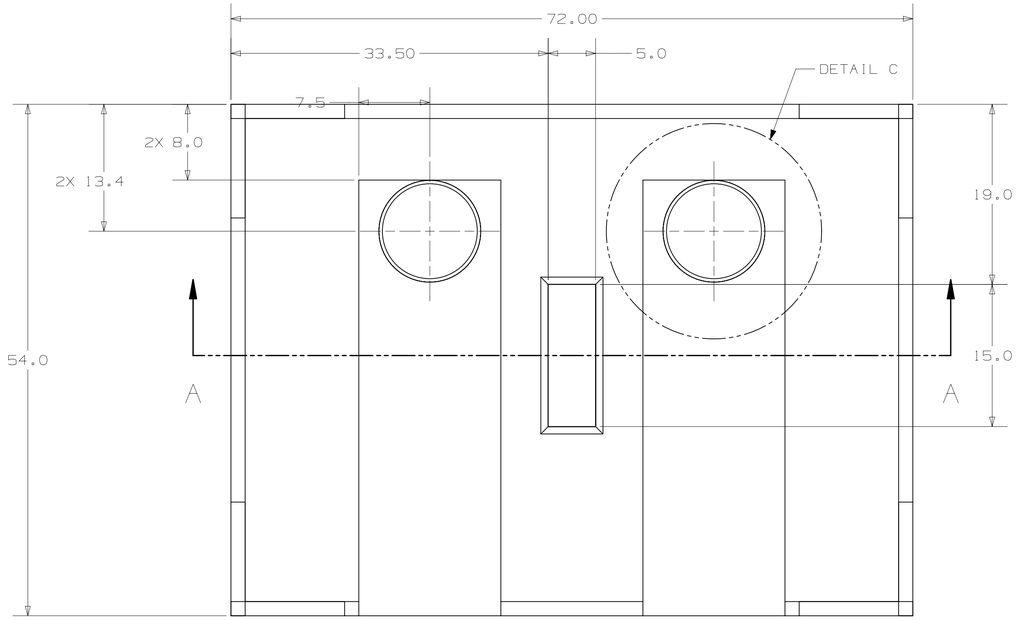


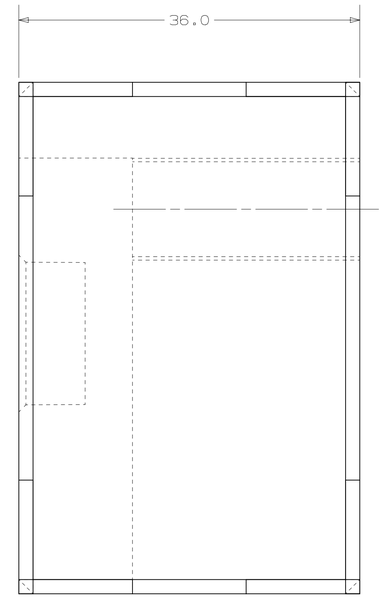


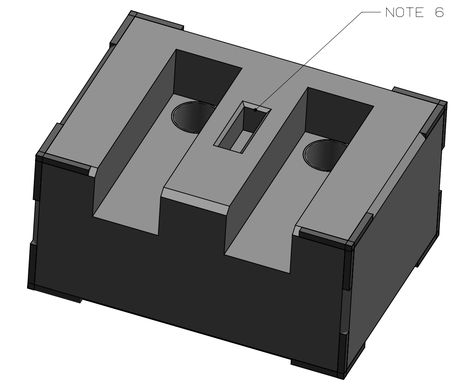


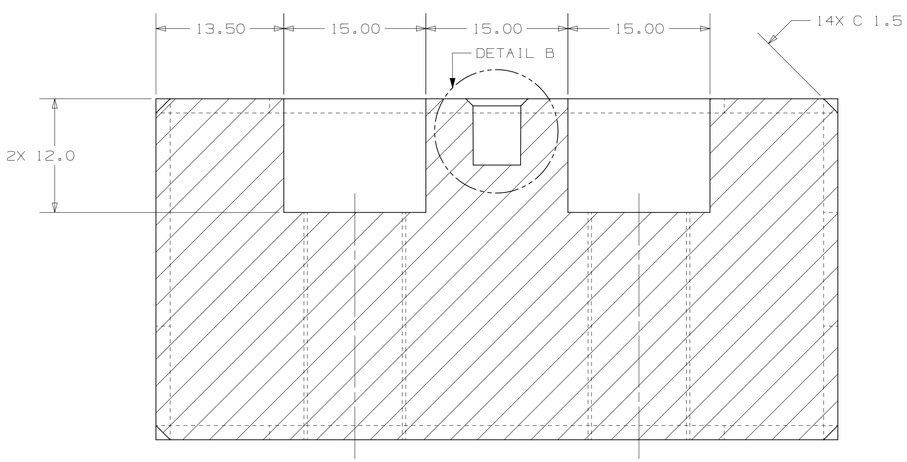


SECTION A - A

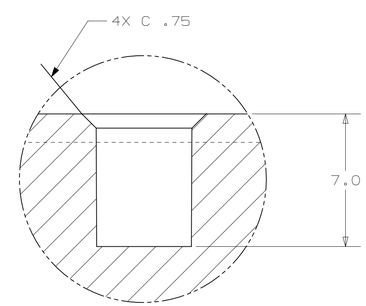


DETAIL B
SCALE 1:4

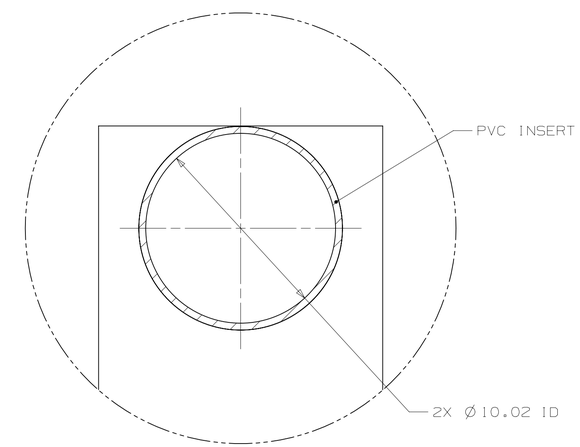


DETAIL C
SCALE 1:4

UNLESS OTHERWISE SPECIFIED:

1. PROTECT FACE AND INSIDE OF ALL POCKETS, INSERTS, AND CHANNELS DURING CONCRETE CASTING.
2. MINIMUM CONCRETE COVER ON ANY REINFORCING BARS IS 1-1/2 INCHES.
3. CONCRETE SHALL HAVE A MINUMUM COMPRESSIVE STRENGTH OF 5,000 PSI IN 28 DAYS.
4. REINFORCING BARS SHALL BE ASTM 615, GRADE 60.
5. ALL STRUCTURAL STEEL SHALL BE ASTM A-36 UNLESS NOTED OTHERWISE.
6. DRAFT ANGLE ON 4 SIDE WALLS .25".

ADDITIONAL TOLERANCES:

±1/8" ON ALL DIMENSIONS 36" AND UNDER; ±1/4" ON ALL DIMENSIONS OVER 36".
±1/2" ON REINFORCING BAR BENDS; ±1" ON BAR LENGTHS.
±1/2" ON BAR PLACEMENT AND HOOK LOCATION
±1/2° ON FACE OF CONCRETE ANGLES AND ON BAR BENDS.
+0" - 1/2" ON PROJECTION OF LIFTING BAR PAST FACE OF CONCRETE.

| UNLESS OTHERWISE SPECIFIED | | | | |
|---|---|---|---|---|
| ±.X | ±.XX | ±.XXX | ±X/X | ±X° |
| .1 | .02 | .005 | 1/16 | 1° |

BREAK ALL SHARP EDGES .015 MAX.
DO NOT SCALE DRAWING
DIMENSIONS BASED ON ASME Y14.5M-1994
MAX. ALL MACH SURFACES 125
DRAWING UNITS: INCHES

| | | | |
|---|---|---|---|
| DRAWN | J.COGHILL | DATE | 07-Sep-2012 |
| CHECKED | | DATE | |
| APPROVED | | DATE | |
| USED ON | | | |
| MATERIAL | CONCRETE 2.24-2.48G/CC 5000psi | | |
| GROUP: Technical Division Design and Drafting | | CAGE CODE: 0U5R6 | |

FERMI NATIONAL ACCELERATOR LABORATORY
UNITED STATES DEPARTMENT OF ENERGY

NAME: RF FIELD SHIELD BLOCK 2-HOLE

| SCALE | SIZE | DRAWING NUMBER | SHEET | REV |
|---|---|---|---|---|
| 1:1 | D | F10001866 | 1 OF 1 | - |