DESCRIPTION: HEADER BLOCK 2-HOLE ASSEMBLY - PX1E
CATEGORY: ASSEMBLY PROJECT: ProjectXFrontEndInfraHTC

REV	REVISION CONTROL DOCUMENT	DATES	SIGNATURES
-	F10001863---RCD		DRAWN:
			APPROVED:

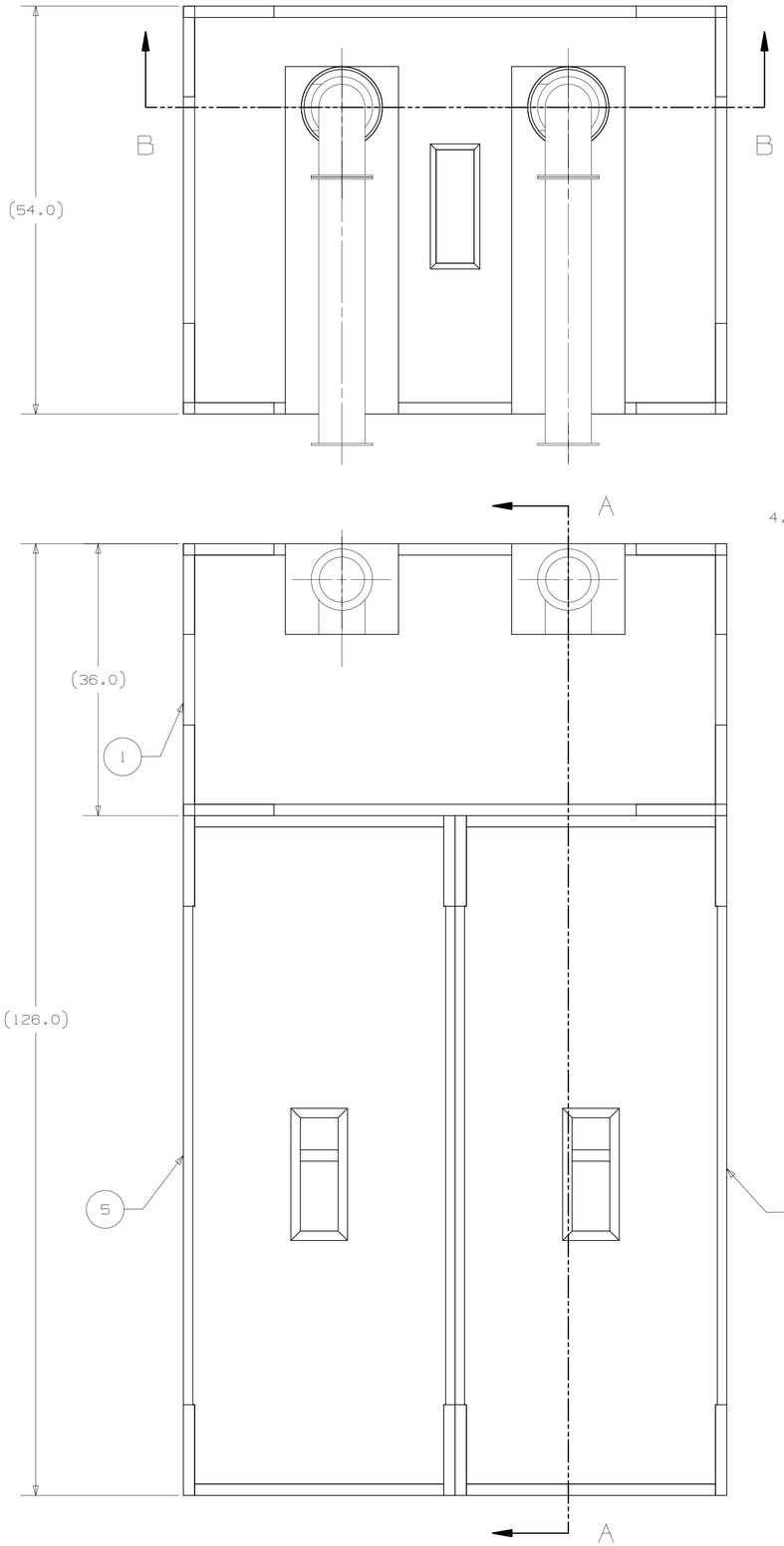

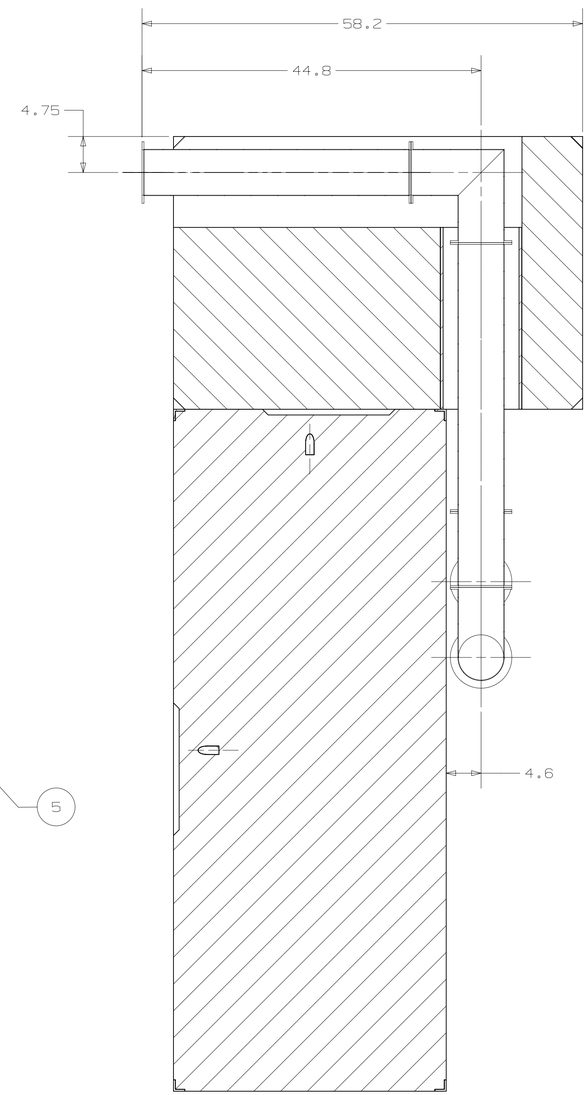

SECTION A - A

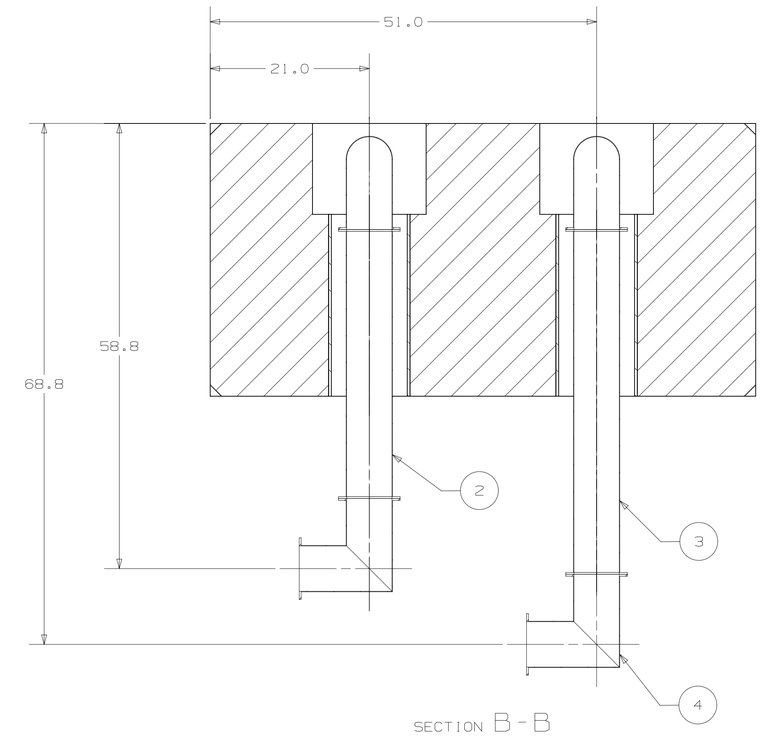

SECTION B - B

NOTES (UNLESS OTHERWISE SPECIFIED):

1. ASSEMBLY MUST BE FREE OF DIRT, GREASE, OIL & CHIPS.
2. ASSEMBLY TO BE FREE OF ALL SHARP EDGES, CORNERS, AND BURRS.
3. ALL COMPONENTS TO BE ASSEMBLED IN THE FIELD.

ITEM	PART NUMBER	PART NAME	QTY
5	FC0022820	CONCRETE SHIELDING-B 10150#	2
4	FC0027404	6-1/8" COAX ELBOW 90 DEGREES - FLANGED	4
3	F10001875	COAX TUBE 6-1/8" OD WITH FLANGES	1
2	F10001871	COAX TUBE 6-1/8" OD WITH FLANGES	3
1	F10001866	RF FIELD SHIELD BLOCK 2-HOLE	1

PARTS LIST

UNLESS OTHERWISE SPECIFIED

±.X	±.XX	±.XXX	±X/X	±X°
.1	.02	.005	1/16	1°

BREAK ALL SHARP EDGES .015 MAX.
DO NOT SCALE DRAWING
DIMENSIONS BASED ON ASME Y14.5M-1994
MAX. ALL MACH SURFACES 125
DRAWING UNITS: INCHES

DRAWN	J.COGHILL	DATE	10-Sep-2012
CHECKED		DATE	
APPROVED		DATE	
USED ON			
MATERIAL	SEE PARTS LIST		
GROUP: Technical Division Design and Drafting		CAGE CODE: 0U5R6	

FERMI NATIONAL ACCELERATOR LABORATORY
UNITED STATES DEPARTMENT OF ENERGY

NAME: HEADER BLOCK 2-HOLE ASSEMBLY

SCALE	SIZE	DRAWING NUMBER	SHEET	REV
1:10	D	F10001863	1 OF 1	-