DESCRIPTION: HEADER BLOCK 4-HOLE ASSEMBLY - PXIE
CATEGORY: ASSEMBLY PROJECT: ProjectXFrontEndInFraHTC

REV	REVISION CONTROL DOCUMENT	DATES	SIGNATURES	
-	F10001862---RCD		DRAWN	
			APPROVED	

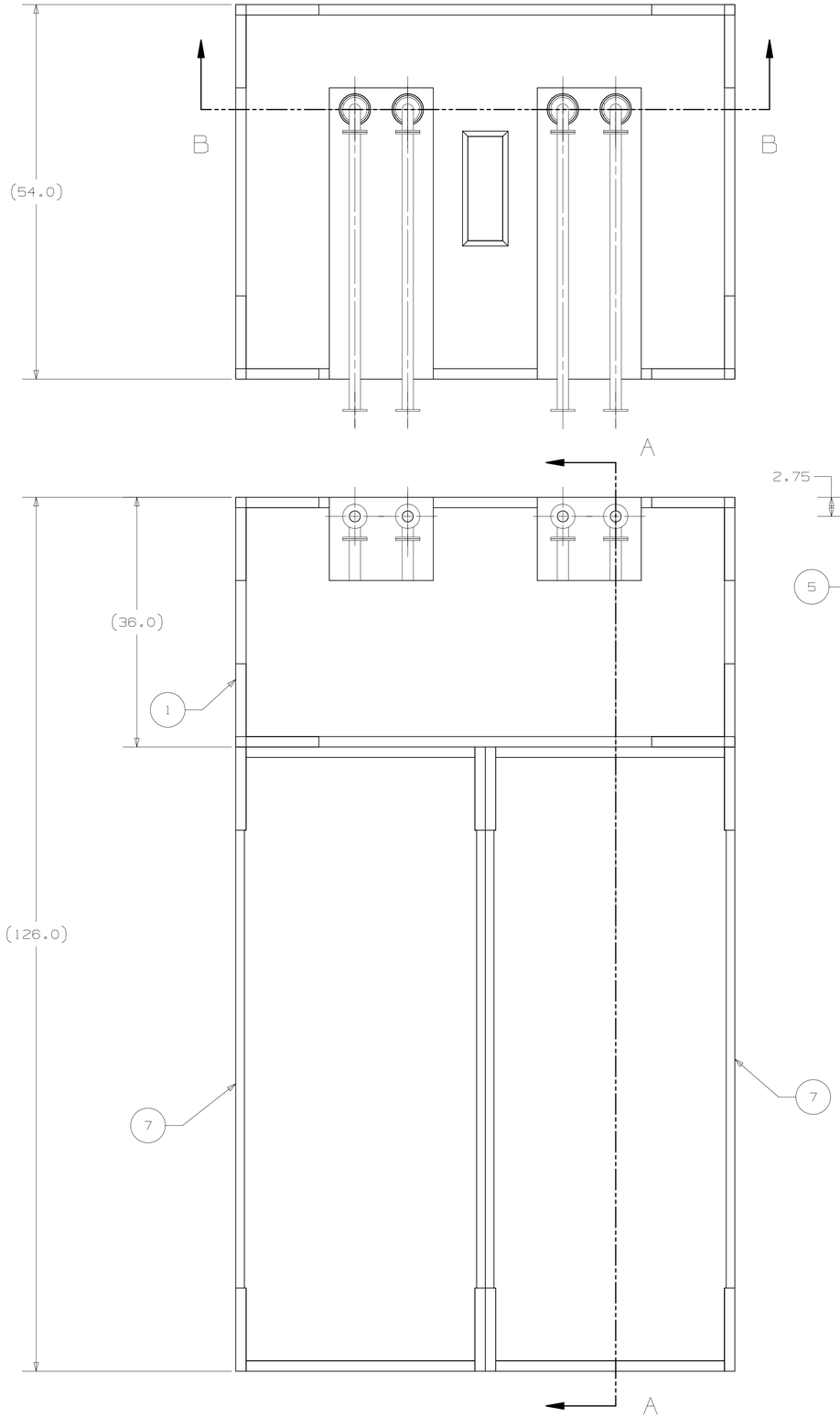

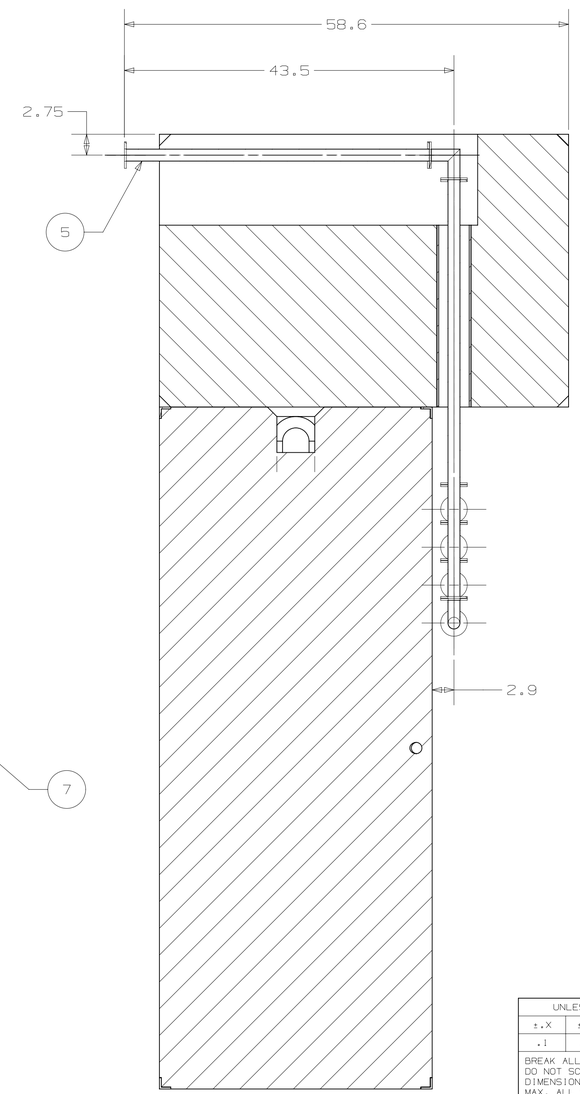

SECTION A - A

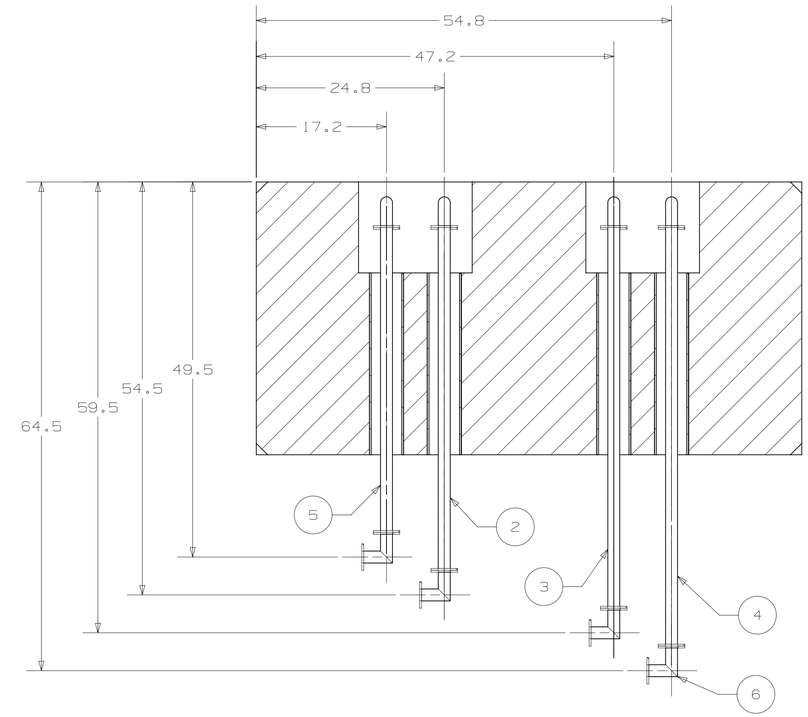

SECTION B - B

NOTES (UNLESS OTHERWISE SPECIFIED):

1. ASSEMBLY MUST BE FREE OF DIRT, GREASE, OIL & CHIPS.
2. ASSEMBLY TO BE FREE OF ALL SHARP EDGES, CORNERS, AND BURRS.
3. ALL COMPONENTS TO BE ASSEMBLED IN THE FIELD.

ITEM	PART NUMBER	PART NAME	QTY
7	FC0022820	CONCRETE SHIELDING-B 10150#	2
6	FC0027403	1-5/8" COAX ELBOW 90 DEGREES - FLANGED	8
5	F10001889	COAX TUBE 1-5/8" OD WITH FLANGES	5
4	F10001874	COAX TUBE 1-5/8" OD WITH FLANGES	1
3	F10001873	COAX TUBE 1-5/8" OD WITH FLANGES	1
2	F10001872	COAX TUBE 1-5/8" OD WITH FLANGES	1
1	F10000733	RF FIELD SHIELD BLOCK	1

PARTS LIST

UNLESS OTHERWISE SPECIFIED				
±.X	±.XX	±.XXX	±X/X	±X°
.1	.02	.005	1/16	1°

BREAK ALL SHARP EDGES .015 MAX.
DO NOT SCALE DRAWING
DIMENSIONS BASED ON ASME Y14.5M-1994
MAX. ALL MACH SURFACES 125
DRAWING UNITS: INCHES

DRAWN	J.COGHILL	DATE	10-Sep-2012
CHECKED		DATE	
APPROVED		DATE	
USED ON			
MATERIAL	SEE PARTS LIST		
GROUP: Technical Division Design and Drafting		CAGE CODE: 0U5R6	

FERMI NATIONAL ACCELERATOR LABORATORY
UNITED STATES DEPARTMENT OF ENERGY

NAME: HEADER BLOCK 4-HOLE ASSEMBLY

SCALE	SIZE	DRAWING NUMBER	SHEET	REV
1:10	D	F10001862	1 OF 1	-