DESCRIPTION: RF FIELD SHIELD BLOCK
CATEGORY: BLOCK PROJECT: ProjectXPXIEFacility

REV	REVISION CONTROL DOCUMENT	DATES	SIGNATURES	
-	F10000733---RCD		DRAWN	
			APPROVED	

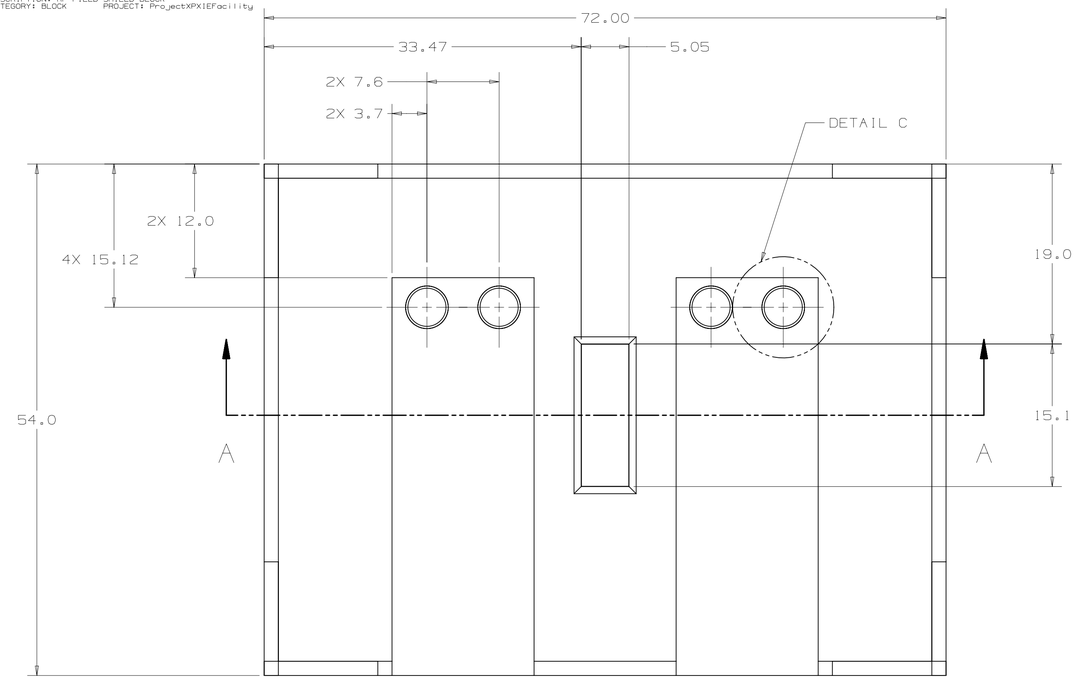

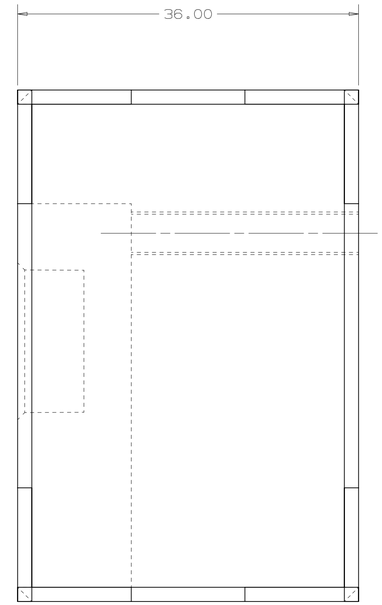

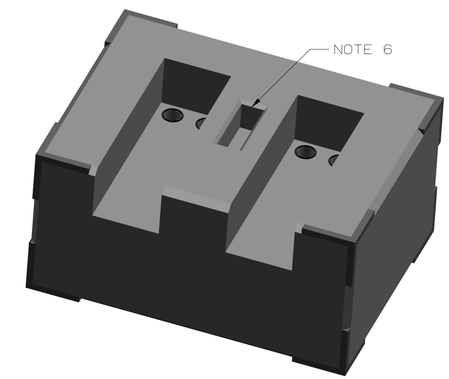

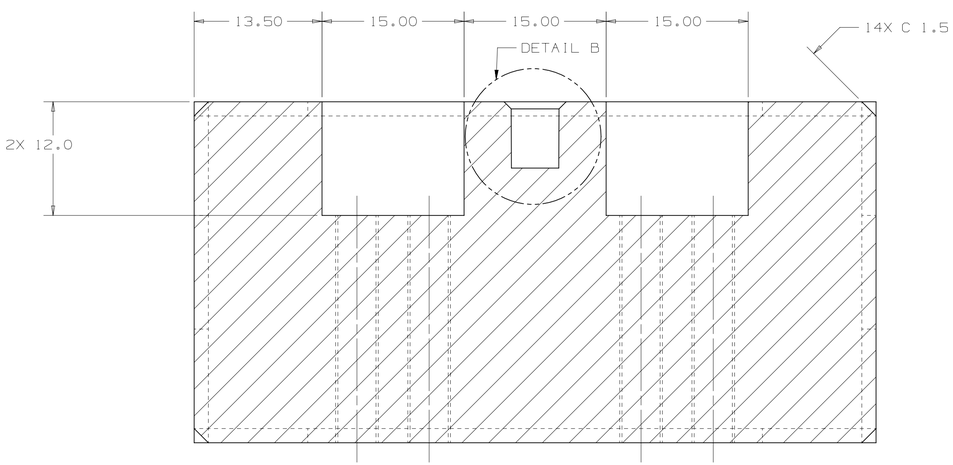

SECTION A - A

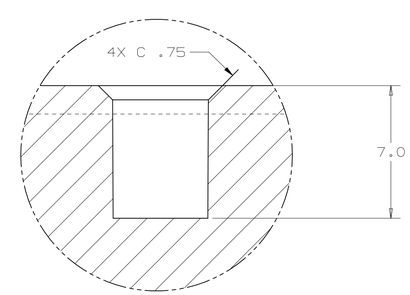

DETAIL B
SCALE 1:4

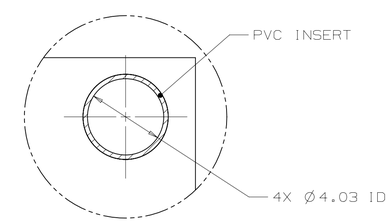

DETAIL C
SCALE 1:4

UNLESS OTHERWISE SPECIFIED:

1. PROTECT FACE AND INSIDE OF ALL POCKETS, INSERTS, AND CHANNELS DURING CONCRETE CASTING.
2. MINIMUM CONCRETE COVER ON ANY REINFORCING BARS IS 1-1/2 INCHES.
3. CONCRETE SHALL HAVE A MINUMUM COMPRESSIVE STRENGTH OF 5,000 PSI IN 28 DAYS.
4. REINFORCING BARS SHALL BE ASTM 615, GRADE 60.
5. ALL STRUCTURAL STEEL SHALL BE ASTM A-36 UNLESS NOTED OTHERWISE.
6. DRAFT ANGLE ON 4 SIDE WALLS .25".

ADDITIONAL TOLERANCES:

±1/8" ON ALL DIMENSIONS 36" AND UNDER; ±1/4" ON ALL DIMENSIONS OVER 36".
±1/2" ON REINFORCING BAR BENDS; ±1" ON BAR LENGTHS.
±1/2" ON BAR PLACEMENT AND HOOK LOCATION
±1/2° ON FACE OF CONCRETE ANGLES AND ON BAR BENDS.
+0" - 1/2" ON PROJECTION OF LIFTING BAR PAST FACE OF CONCRETE.

Weight = 11150 lbf

UNLESS OTHERWISE SPECIFIED				
±.X	±.XX	±.XXX	±X/X	±X°
.1	.02	.005	1/16	1°

BREAK ALL SHARP EDGES .015 MAX.
DO NOT SCALE DRAWING
DIMENSIONS BASED ON ASME Y14.5M-1994
MAX. ALL MACH SURFACES 125
DRAWING UNITS: INCHES

DRAWN	J.COGHILL	DATE	07-Sep-2012
CHECKED		DATE	
APPROVED		DATE	
USED ON			
MATERIAL	CONCRETE 2.24-2.48G/CC 5000psi		
GROUP: Technical Division Design and Drafting		CAGE CODE: 0U5R6	

FERMI NATIONAL ACCELERATOR LABORATORY
UNITED STATES DEPARTMENT OF ENERGY

NAME: RF FIELD SHIELD BLOCK

SCALE	SIZE	DRAWING NUMBER	SHEET	REV
1:8	D	F10000733	1 OF 1	-