LLRF for PXIE

Brian Chase
For the Project X
LLRF Collaboration

Outline

- Recent results
  - NML
  - Six Cavity test
- PXIE control requirements
- Preliminary design
- High efficiency solid state PA LLRF interface

NML CM1 LLRF Racks

Receivers and Up-converter

3 Digital Controllers (MFCs)
- Probe, Fwd, Ref

Master Oscillator

Power Supplies

8 Channel Receiver / Transmitter

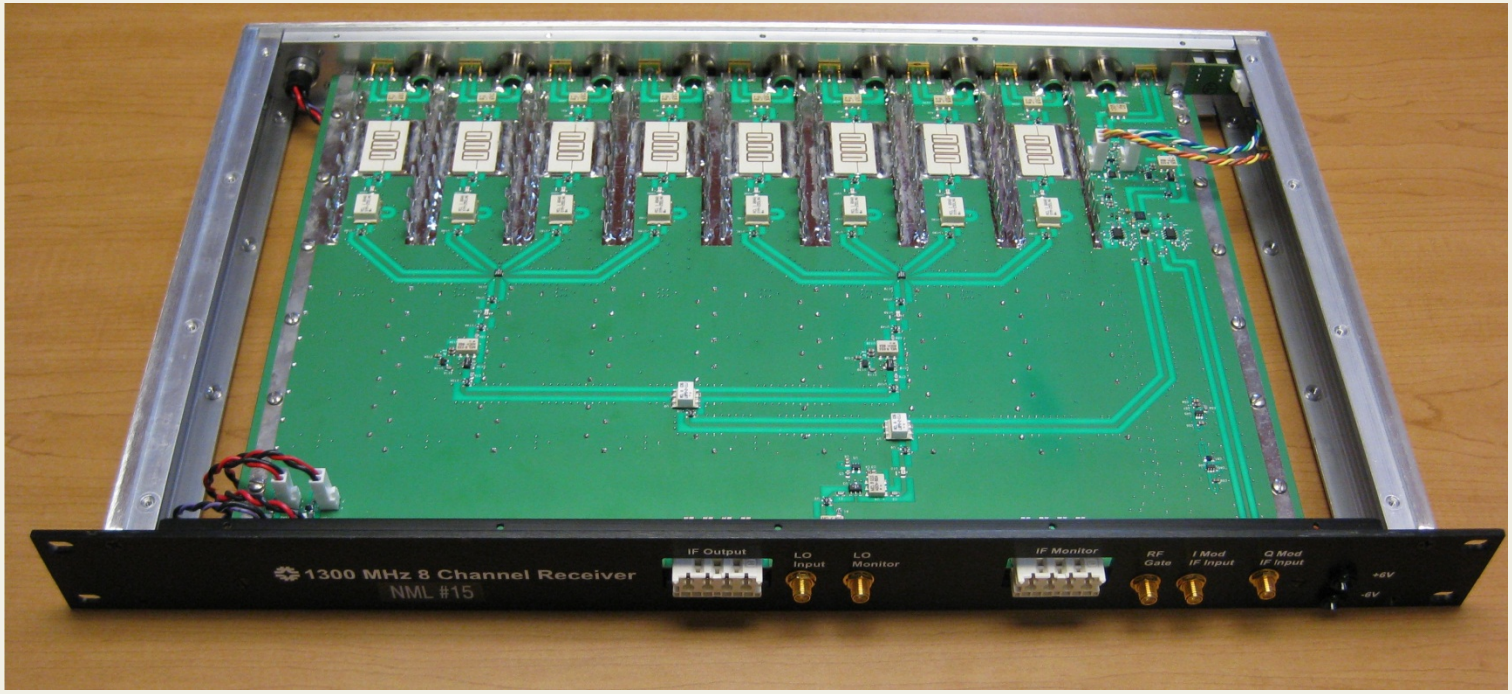

- 8 Channels of 1.3 GHz to 13 MHz down converters
- 1 transmitter with 13 MHz IQ modulation and 1.3 GHz output
- Minimum 76 dB of channel to channel isolation
- RF to IF conversion loss of 4 dB
- IF output noise floor of -153 dBm/sqrt(Hz)
- RF input 1 dB compression of 12.5 dBm
- Type-N RF input connectors, Harting 8 coax IF output connector
- Phase temperature stability of 0.06 degrees/ degree C
- Amplitude Temperature stability of 0.008 dB / degree C

MFC - 32 Chanel Controller

Technologies of interest:

-Multi-channel ADCs

-Low Voltage Differential Signaling (LVDS) high speed serial connections

-Differential IF signal paths

-8 channel coax connectors

-Shielded enclosure

-Low cost per channel

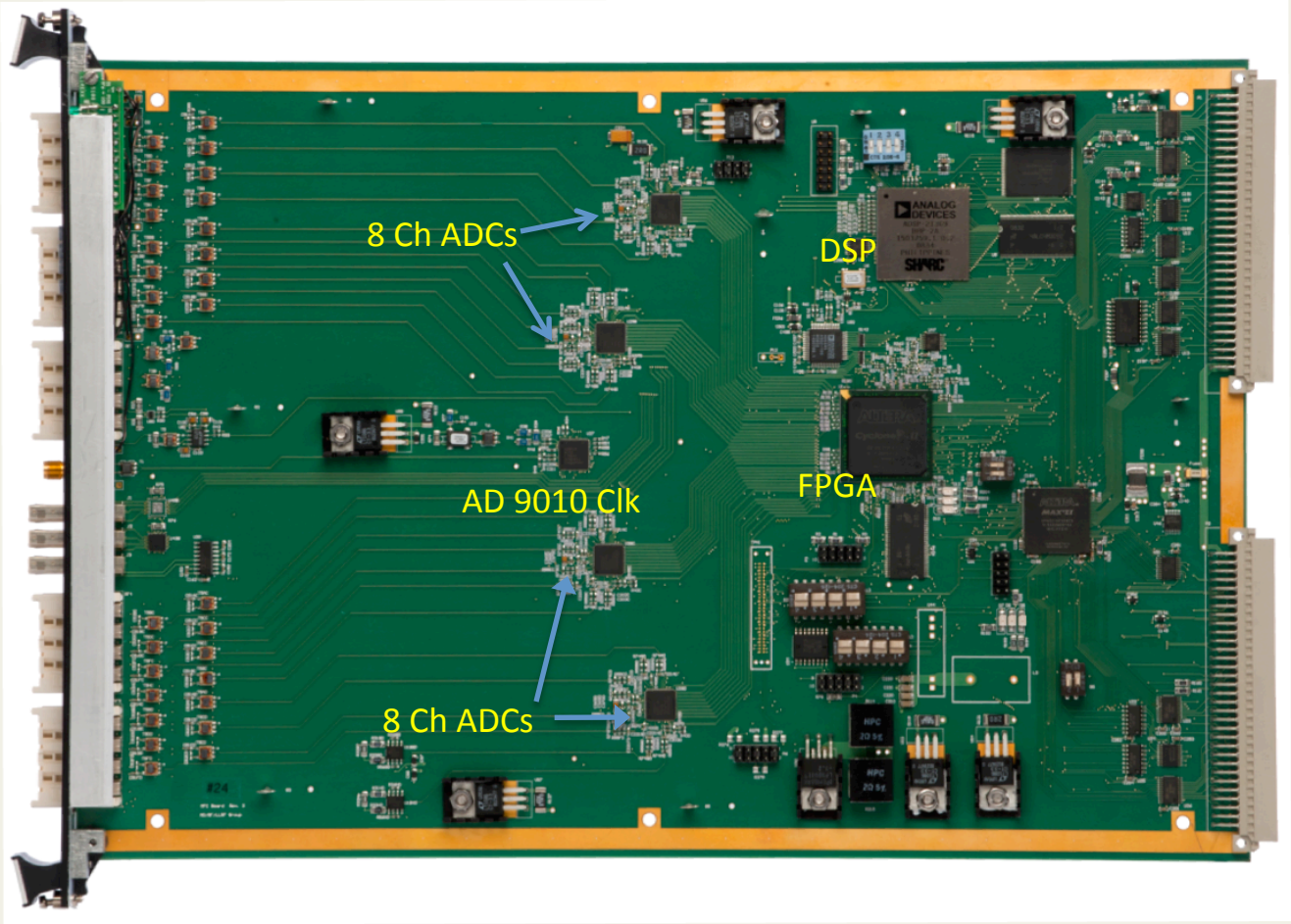

Controller Firmware

Adjustable notch filter at 8pi/9 (F,Q)
Fixed notch filter at 7pi/9
PI controller

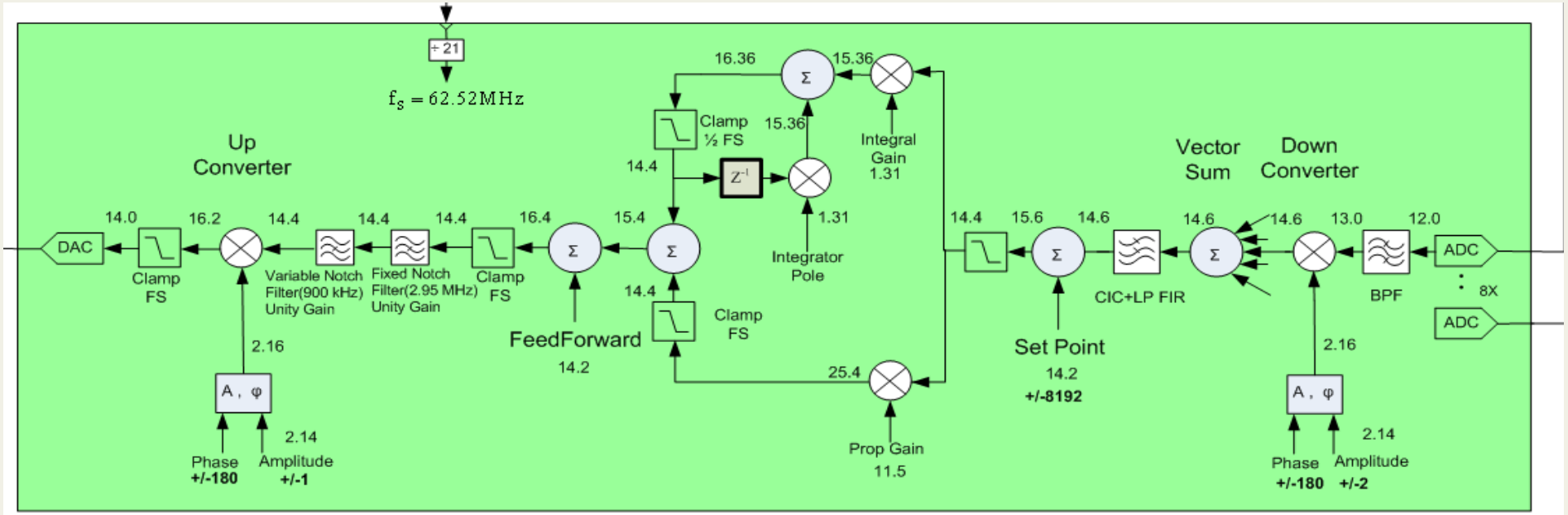

Digital Controller

Master Oscillator

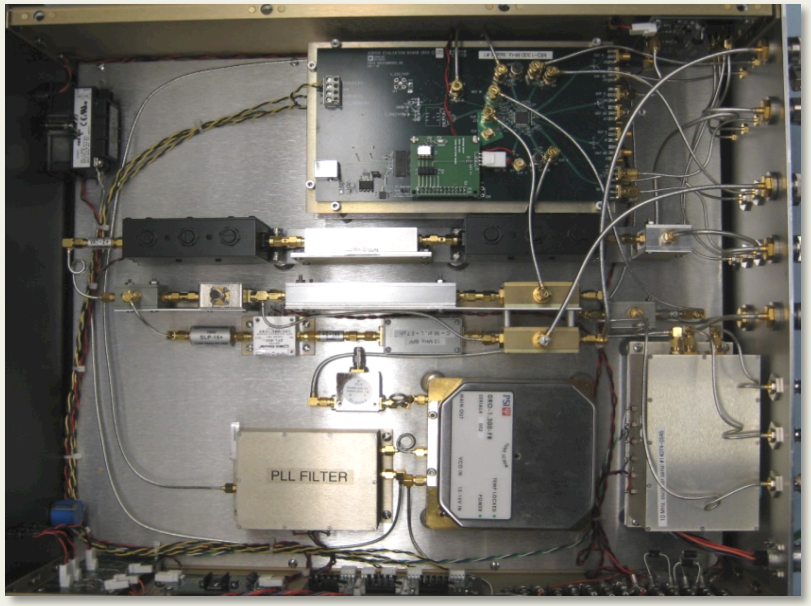

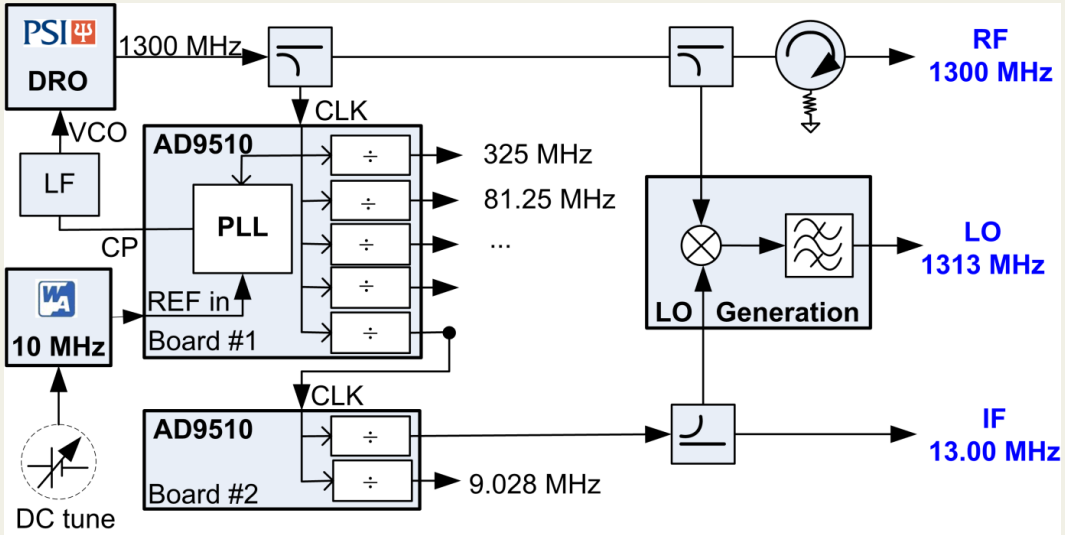

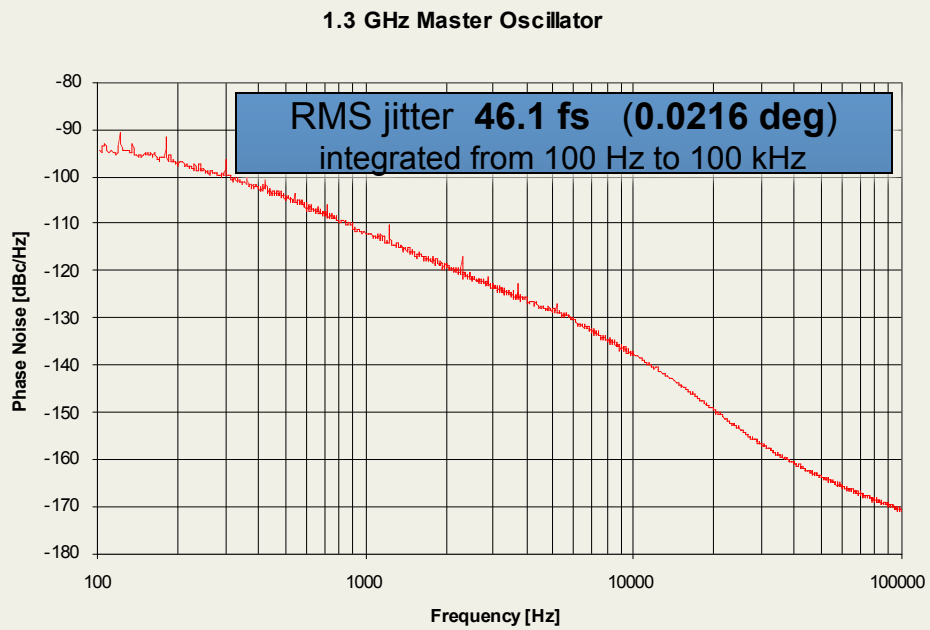

- RF, LO, IF
- Programmable outputs
- Timing reference
- 1.3 GHz
- <140 fs integrated jitter (1Hz–10MHz)

NML CM1 Field and Resonance Controllers

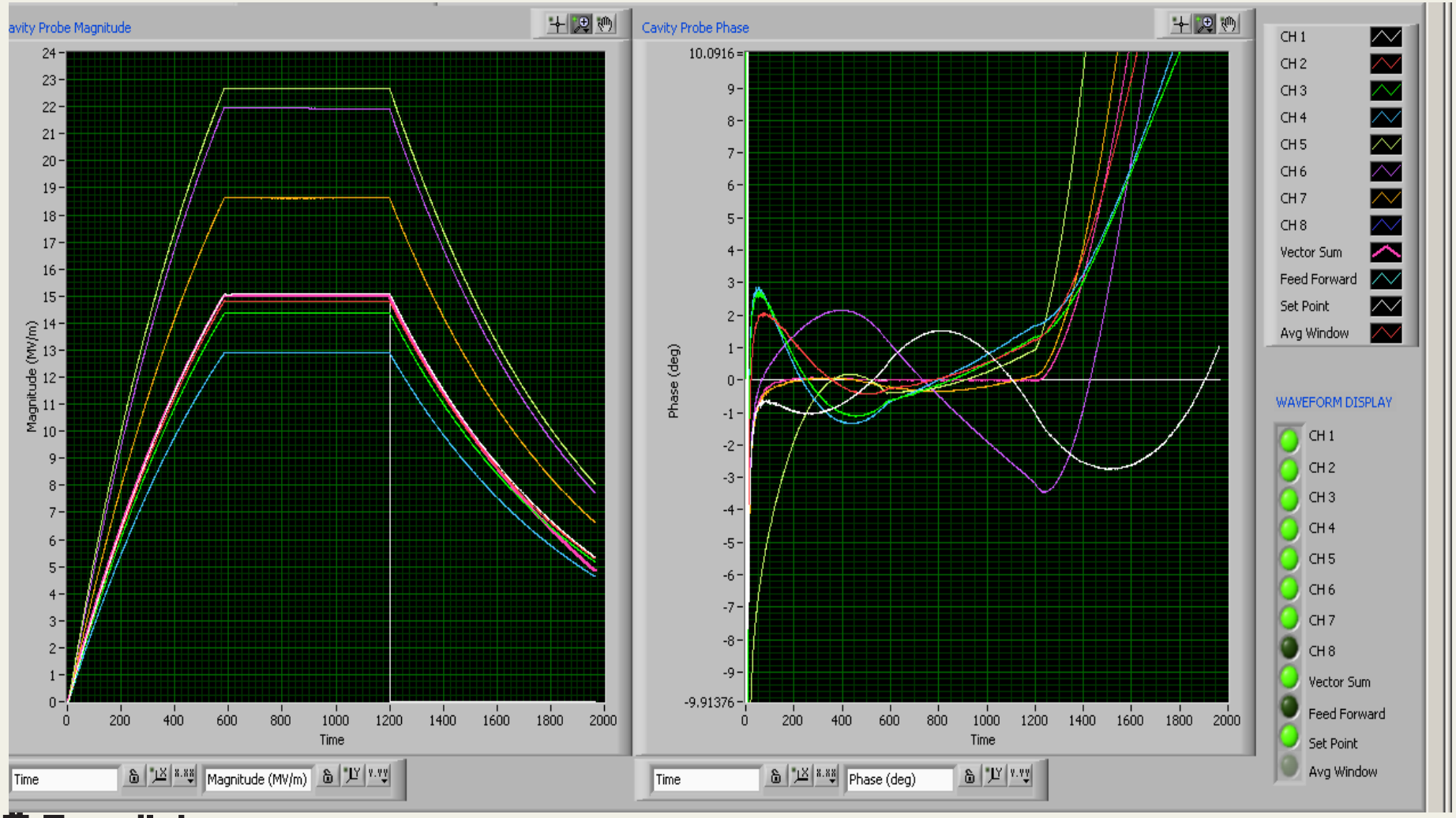

Flattop Vector Sum RMS Error vs Gain (Igain = Pgain x 7.5e4)

Best regulation at;
Pg= 200, Ig=1.5e7

Internal measured loop error
Receiver noise is below this level

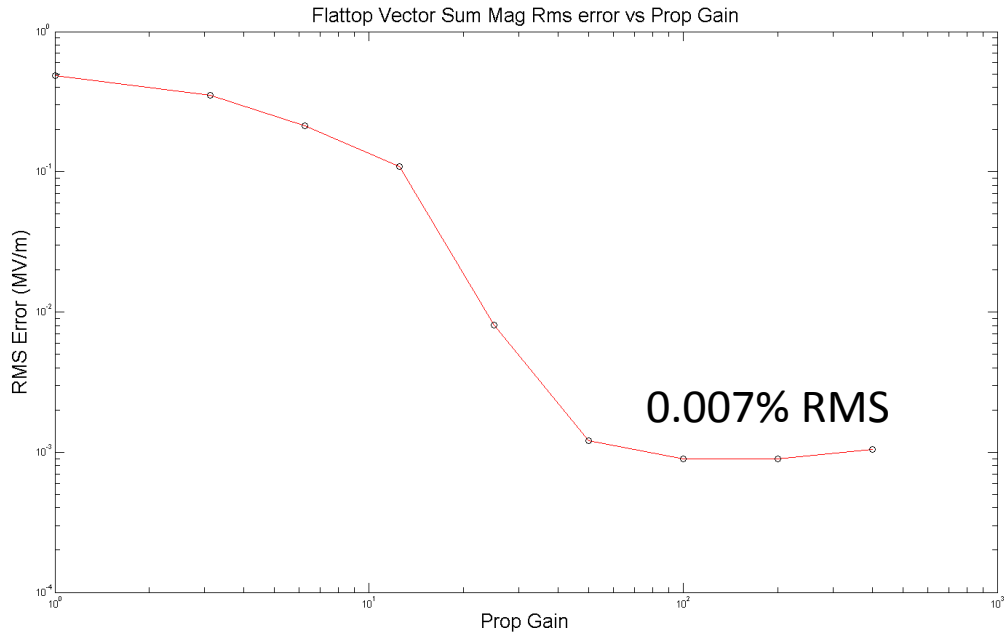

RMS error at low gain is dominated by static errors and cavity tilts

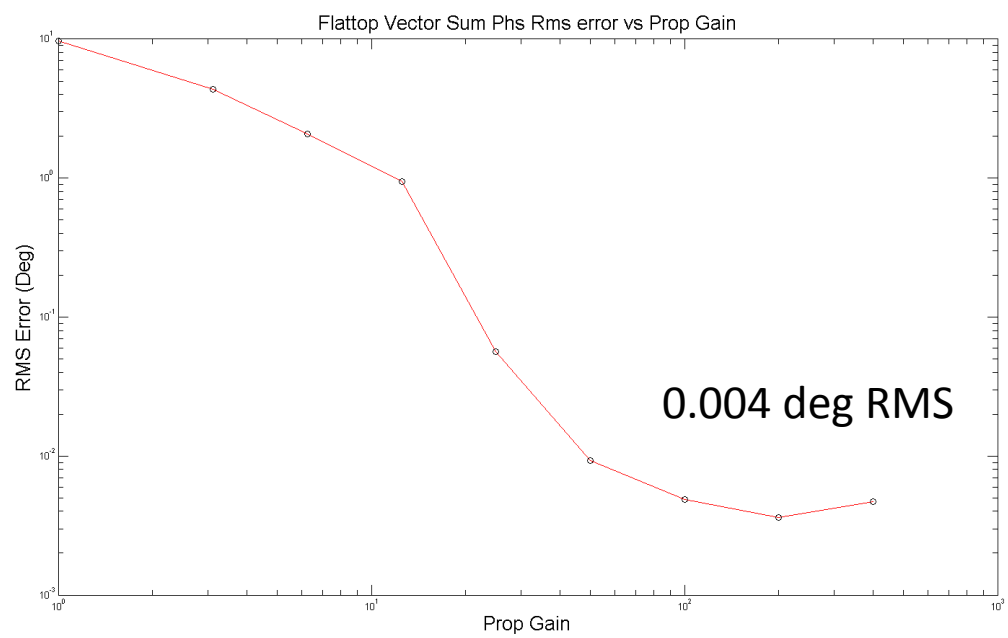

HINS with Ferrite Vector Modulators: Individual Cavity Feedback Control

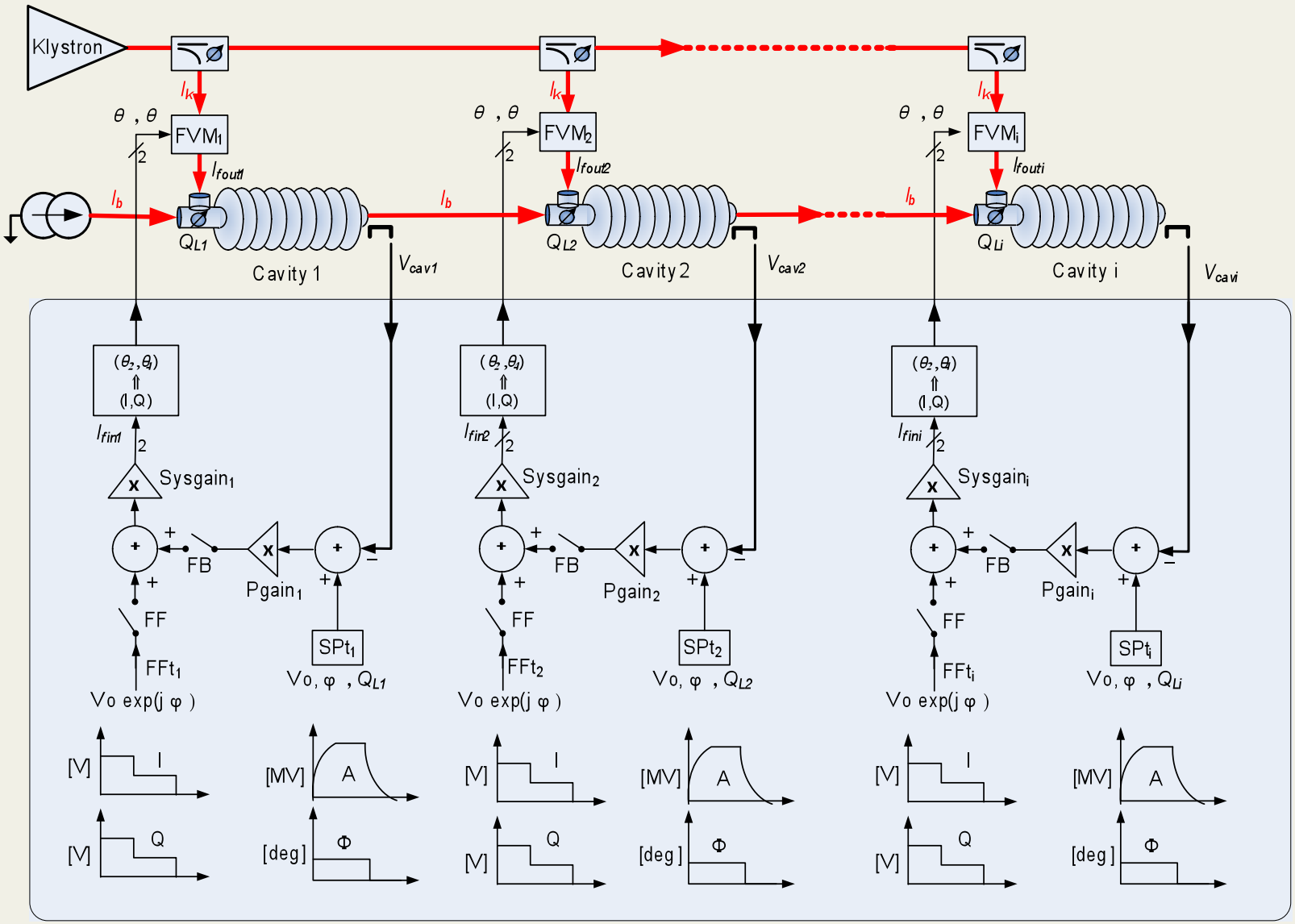

Cavity 3 (highest gradient) Cavity Regulation

- RFQ RF Feedback ON
- FVM Control ON
- Beam OFF

+/-4%

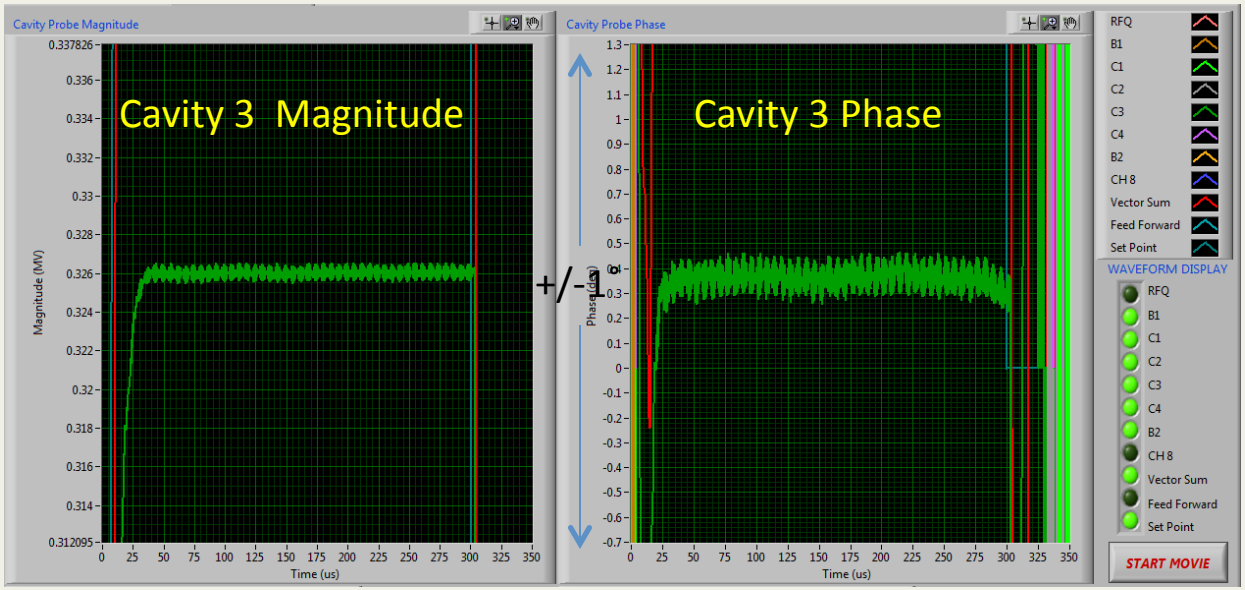

Pulse to Pulse Average of RMS Error (flat-top) (50 Pulses)

FVM Step Response

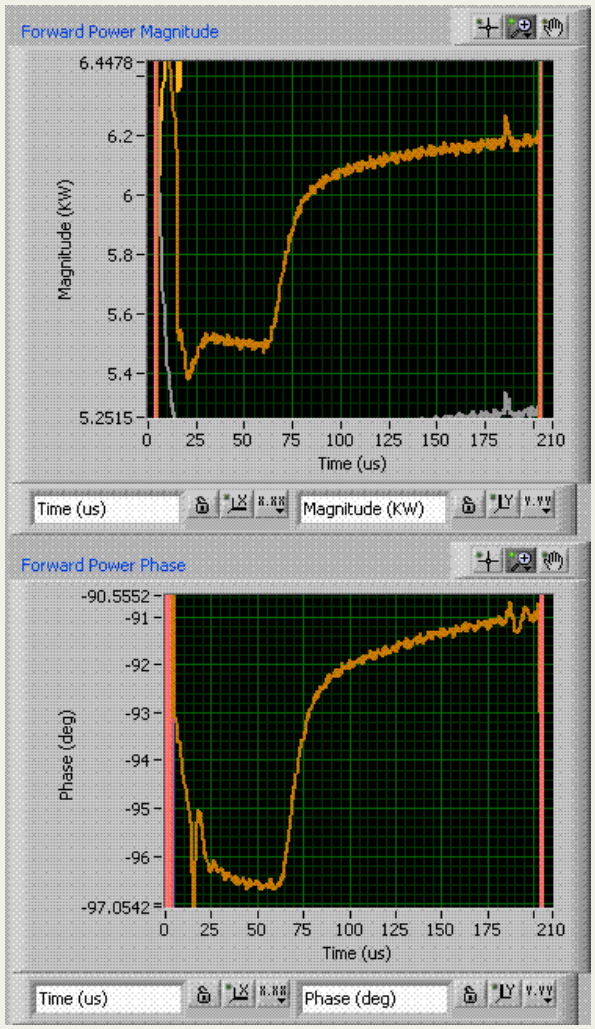

- 2% step in magnitude
- 5 degree step in phase

Rise ~ 27 us -> bandwidth ~37 kHz

- Further studies could easily be performed using phase shifter legs in a stub tuner configuration

- Provide wideband resonance control and optimal loaded Q match

PXIE RF Control Requirements

Requirement		Comments
Cavities per RF Amplifier	1	Suggests a new controller design
Beam Pulse width	~1µS to CW	Pulsed mode for systems commissioning
Beam Rep rate	60 Hz, CW	
Beam current	1mA	Upgradable to 2mA
RF Cavity Frequencies	162.5, 243.75 325 MHz	Many sub-harmonics in Chopper And beam structure
Field Regulation	< 1%, < 0.5˚ @325MHz	Limits are in beam based calibration
Resonance control HWR , SSR1	< 40 Hz	PZT experience is very good Reliability TBD

PXIE RF Subsystem Parameters

Cavity type	Frequency (MHz)	Quant.	Slow Tuner	PZT	Power	Q_l
RFQ	162.5	1	Yes	No	<130 kW	
MEBT Buncher	162.5	3	Yes	No	2 kW	2336
LEBT &MEBT Chopper ARBs	3.9 GHz	4	NA	NA	TBD	NA
HWR	162.5	8	Yes	?	5 kW	2E+6
SSR1	325	8	Yes	Yes	5 kW	3.8E+6
Deflecting Cavity	243.75	1	Yes	no	6 kW	TBD

PXIE Cavity Parameters

Frequency (MHz)	Section	Geometrical Beta	Effective Length (m)	Optimal R/Q (Ohm)	Q_cav	Amp. (MV)	Synchr. Phase (deg)	Gradient (MV/m)	Voltage (MV)	TTF	Input Energy (MeV)	Power (kW)	Pg (kW)	External Q	Delta f (Hz)	Stored Energy (J)	Static Detuning (Hz)	Pg (actual df) (kW)	Max Microph. Amp (Hz)
162.5	MEBT	0.06	0.12	435	8.0E+03	0.066	-90	0.542	0.065	0.99	2.12	0	1.50	3.3E+03	48819	0.0	528.171	1.294	10000
162.5	MEBT	0.06	0.12	435	8.0E+03	0.043	-90	0.351	0.042	0.99	2.12	0	0.63	3.3E+03	48819	0.0	817.299	0.541	10000
162.5	MEBT	0.06	0.12	435	8.0E+03	0.071	-90	0.586	0.07	0.99	2.12	0	1.75	3.3E+03	48819	0.0	489.21	1.508	10000
162.5	HWR1	0.114	0.21	217	2.0E+10	0.7	-45	2.138	0.449	0.64	2.12	0.317	0.74	2.0E+06	83.2	2.2	11.421	0.477	40
162.5	HWR1	0.114	0.21	217	2.0E+10	0.78	-40	2.825	0.593	0.76	2.44	0.454	0.95	1.9E+06	84.2	2.7	11.05	0.635	40
162.5	HWR1	0.114	0.21	217	2.0E+10	0.94	-35	3.899	0.819	0.87	2.89	0.671	1.39	1.9E+06	84.4	4.0	9.371	0.93	40
162.5	HWR1	0.114	0.21	217	2.0E+10	1.24	-30	5.644	1.185	0.96	3.56	1.027	2.33	1.9E+06	83.4	6.9	6.796	1.518	40
162.5	HWR1	0.114	0.21	217	2.0E+10	1.5	-28	7.109	1.493	1.00	4.59	1.318	3.30	2.0E+06	82.6	10.2	5.492	2.094	40
162.5	HWR1	0.114	0.21	217	2.0E+10	1.8	-28	8.507	1.786	0.99	5.91	1.577	4.55	2.0E+06	81.8	14.6	4.564	2.801	40
162.5	HWR1	0.114	0.21	217	2.0E+10	1.8	-35	8.299	1.743	0.97	7.49	1.428	4.46	2.0E+06	81.5	14.6	5.44	2.704	40
162.5	HWR1	0.114	0.21	217	2.0E+10	1.8	-35	8.058	1.692	0.94	8.91	1.386	4.43	2.0E+06	81.4	14.6	5.282	2.678	40
325	SSR1	0.215	0.1985	242	1.1E+10	1.6	-39	6.223	1.235	0.77	10.30	0.96	1.87	3.8E+06	85.3	5.2	11.942	1.275	40
325	SSR1	0.215	0.1985	242	1.1E+10	1.6	-35	6.654	1.321	0.83	11.26	1.082	1.95	3.8E+06	86.7	5.2	11.637	1.367	40
325	SSR1	0.215	0.1985	242	1.1E+10	2	-34	8.809	1.749	0.87	12.34	1.45	2.89	3.8E+06	85.0	8.1	9.613	1.954	40
325	SSR1	0.215	0.1985	242	1.1E+10	2.4	-33	11.134	2.21	0.92	13.79	1.854	4.00	3.9E+06	83.9	11.7	8.217	2.643	40
325	SSR1	0.215	0.1985	242	1.1E+10	2.4	-32	11.569	2.297	0.96	15.64	1.948	4.06	3.9E+06	84.3	11.7	8.308	2.711	40
325	SSR1	0.215	0.1985	242	1.1E+10	2.4	-31	11.845	2.351	0.98	17.59	2.015	4.11	3.8E+06	84.6	11.7	8.267	2.761	40
325	SSR1	0.215	0.1985	242	1.1E+10	2.4	-31	12	2.382	0.99	19.61	2.042	4.12	3.8E+06	84.8	11.7	8.376	2.78	40
325	SSR1	0.215	0.1985	242	1.1E+10	2.4	-30	12.07	2.396	1.00	21.65	2.075	4.15	3.8E+06	84.9	11.7	8.179	2.804	40

Master Oscillator Output Frequencies (Phased Aligned)

- 1300 MHz reference
  - DRO generated master frequency
  - 1313 MHz MFC distributed clock reference
- 3.9 GHz (1300 * 3) ARB Clock
- 325 MHz (1300/4) SSR1
  - 338 MHz L0
- 243.75 MHz (81.25 * 3) Deflecting mode cavity
  - 256.75 MHz LO
- 162.5 MHz (1300/8) HWR
  - 175.5 MHz LO
- 81.25 MHz (1300/16) Beam Diagnostics
- 10.156 MHz (1300/128) Clock system

PXIE RF Reference and Clock Generation

- 81.25 MHz is the beam fundamental after the RF splitter
- 101.5 kHz is a suggested fundamental frequency for the chopper
- Pulsed operation is selected from the Chopper fundamental

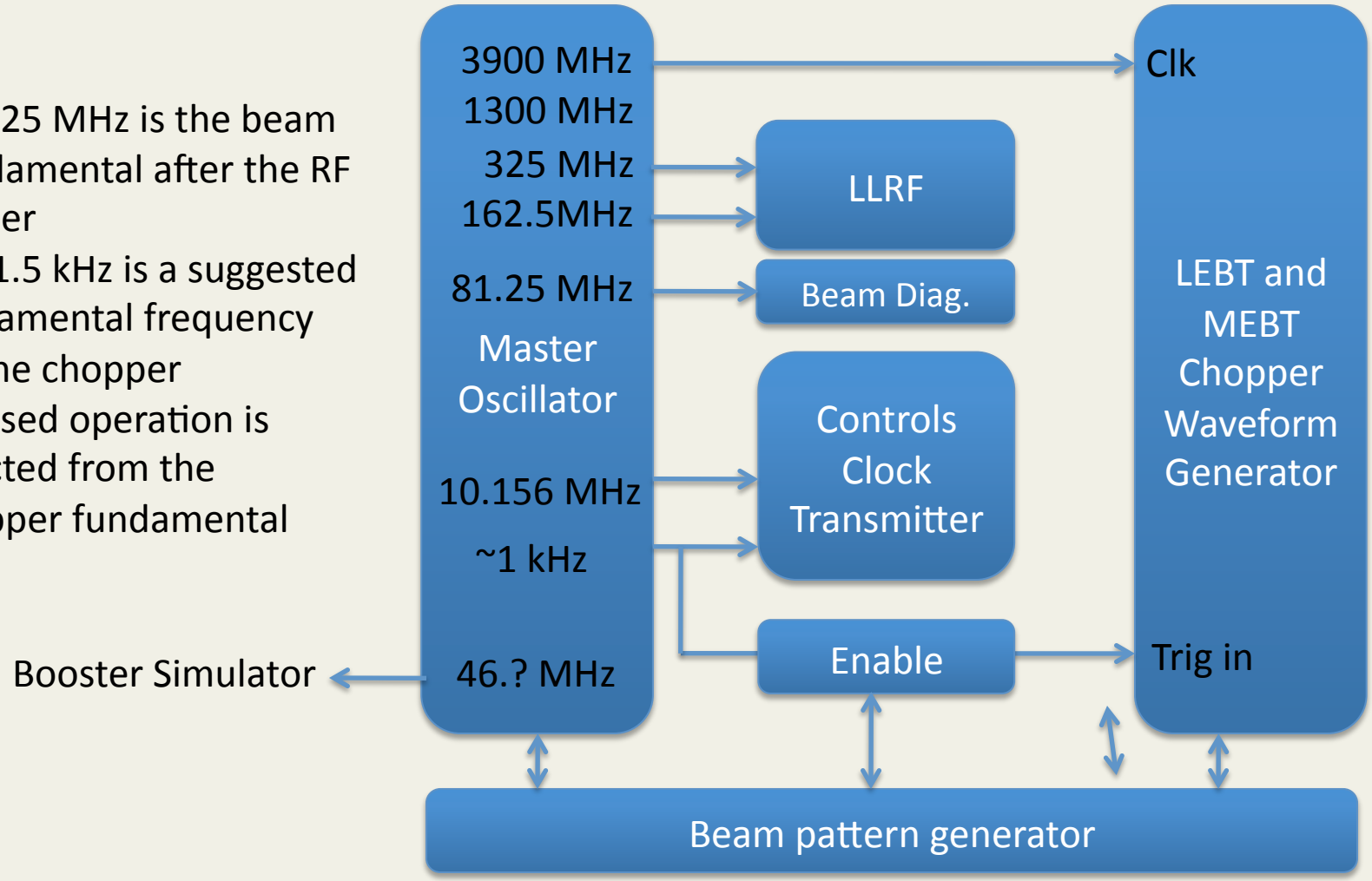

Project X LLRF Concept - 8 Cavity Controller

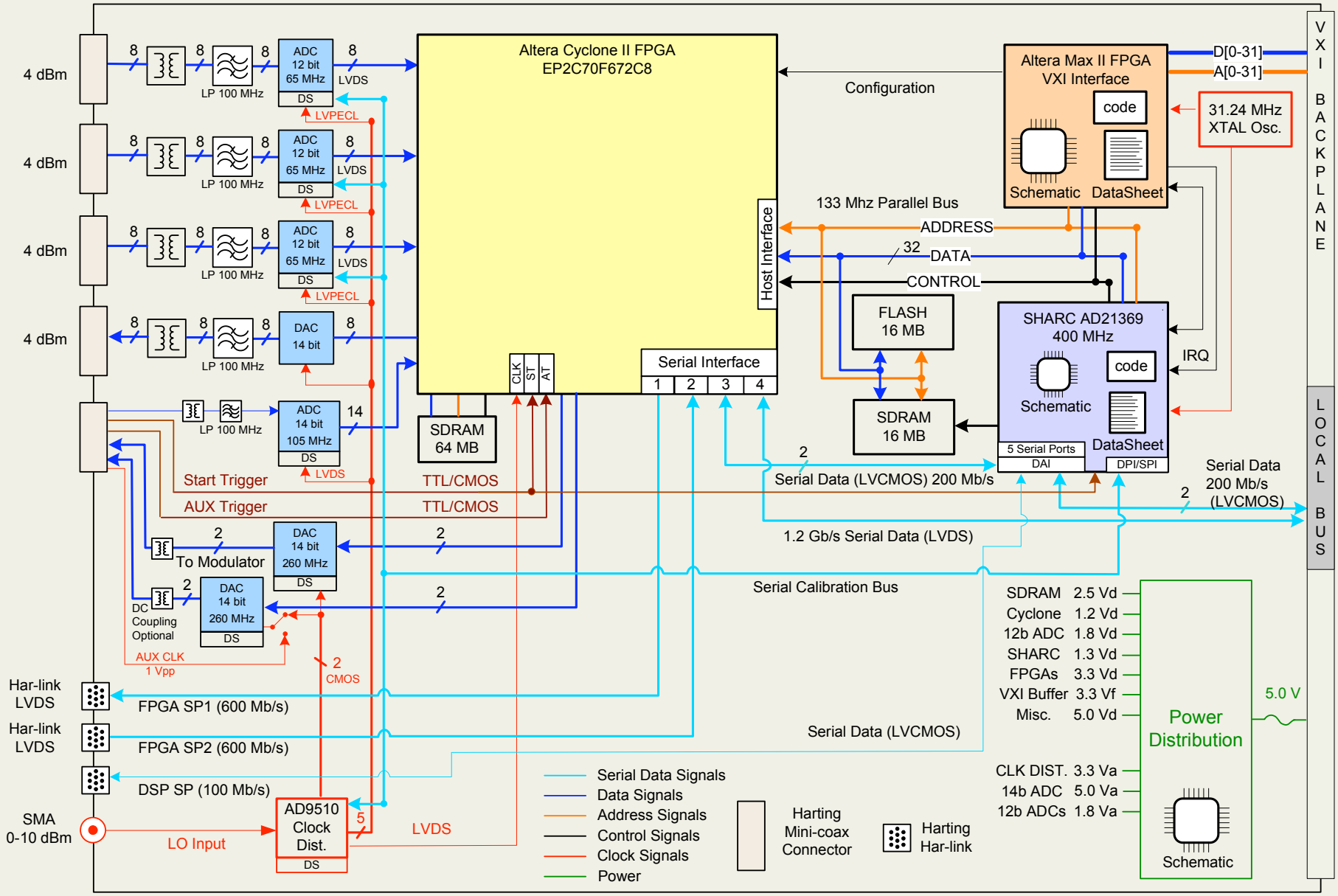

PXIE Digital Controller Options

- Use existing MFC 32 Channel card
  - Outdated parts, backplane BW limited
- Upgrade MFC for VXI 4.0
  - Lower noise ADCs, Cyclone 5 FPGA, High speed Switched fabric backplane
- Collaborate with LBNL and ANL on a new controller design

EFFICIENCY - WHY?

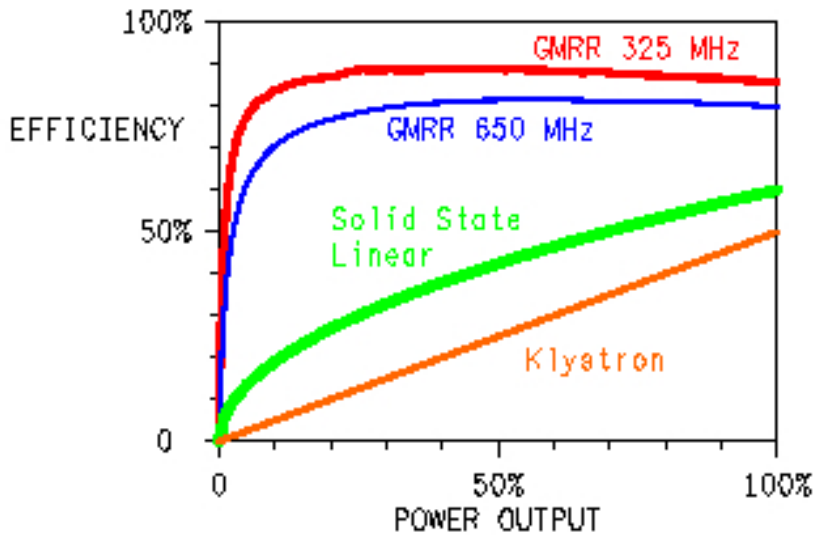

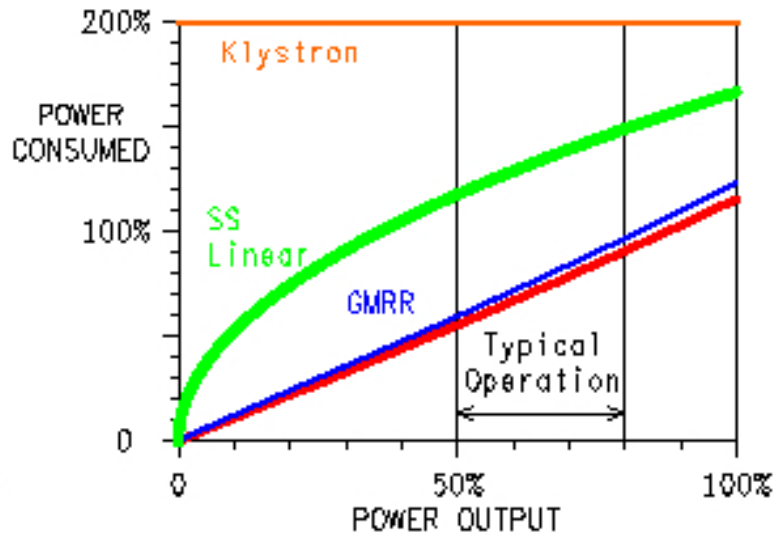

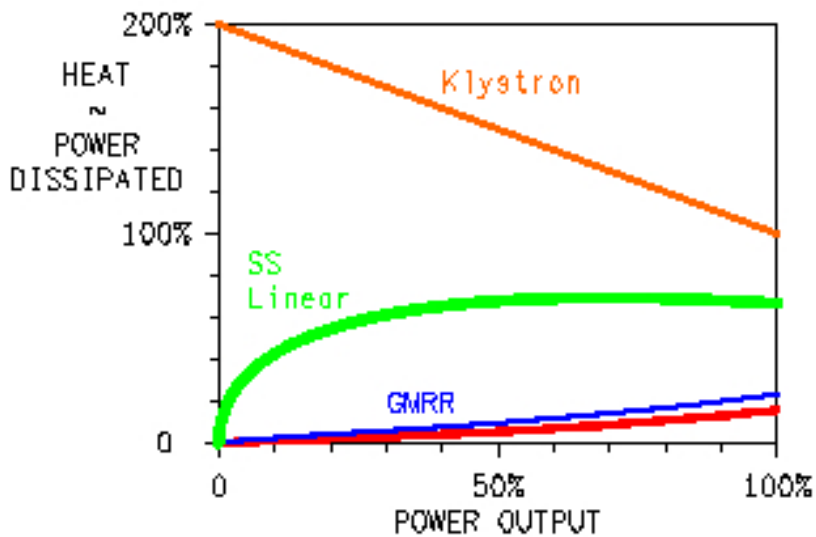

- **Operating cost**
- **Cooling requirements**
- **Reliability**

HIGH-EFFICIENCY PA SYSTEM

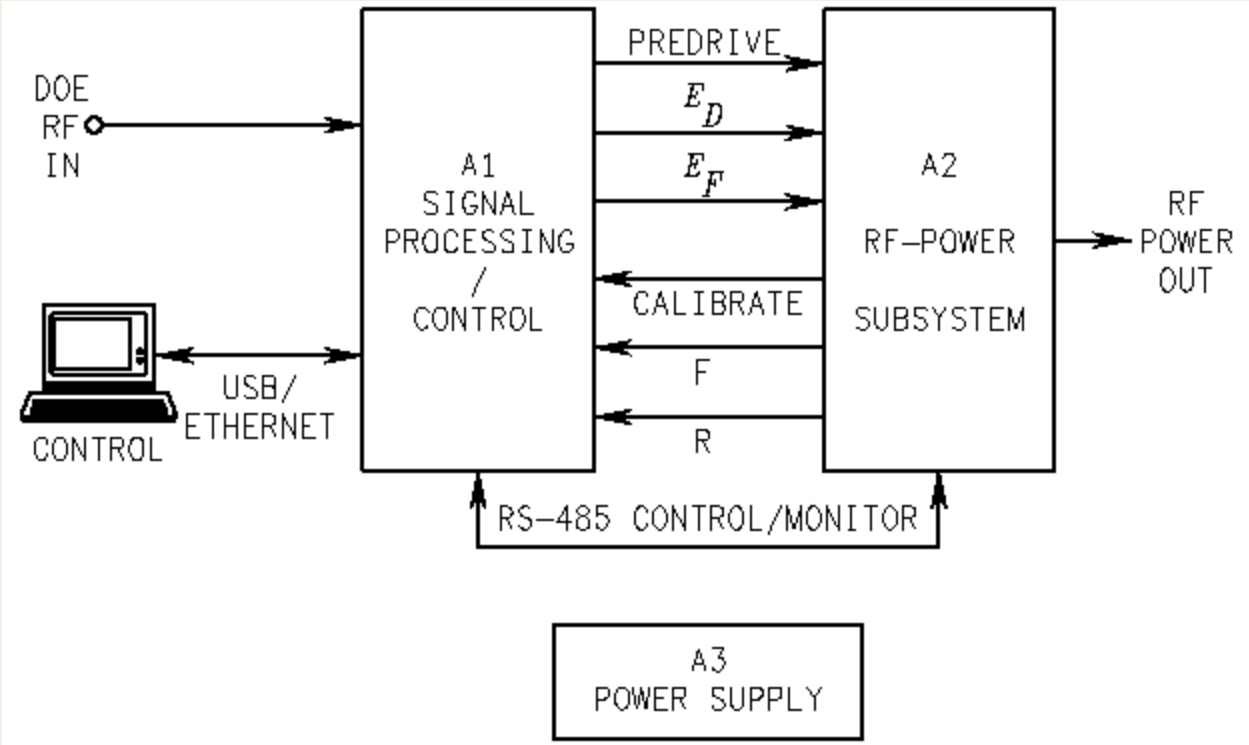

DSP + HIGH-EFFICIENCY RF PAs

- **Max efficiency for given amplitude**
- **Phase errors corrected**
- **Control and monitoring**

Tightly Coupled LLRF – SSPA – RC

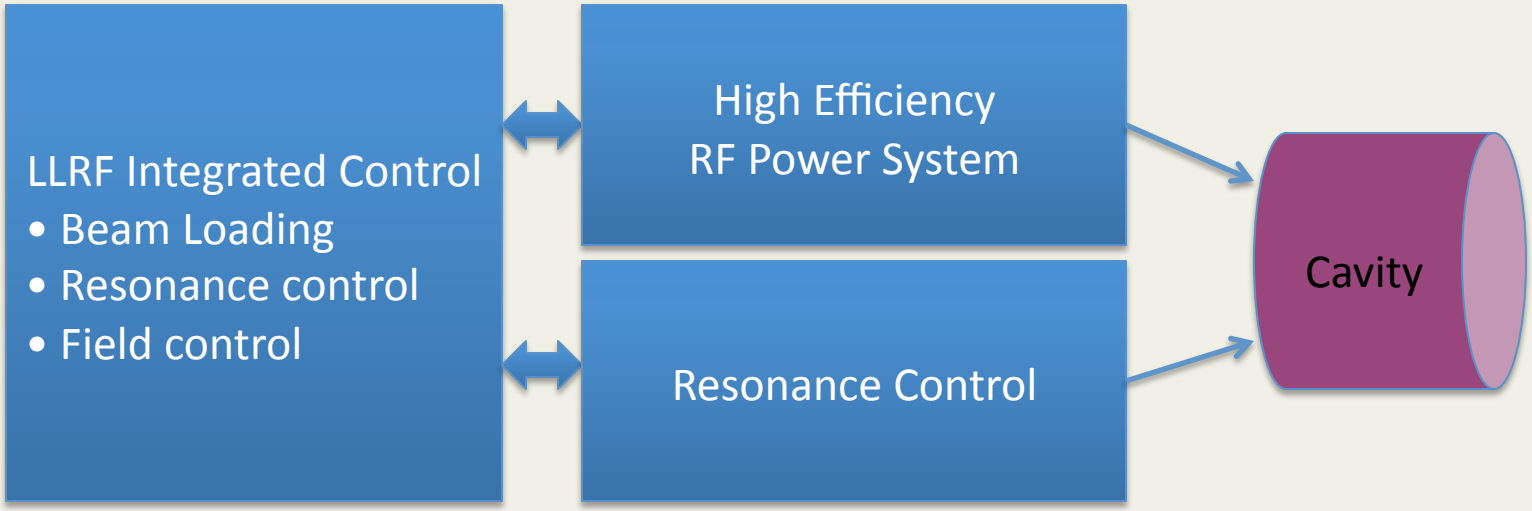

Combine some elements of process control of both LLRF and PA to allow for:

- Single points for RF detection
- Single point phase and amplitude control
- Direct Feedforward for both AM and PMl
- Integrated resonance control
- Reduce component cost