MEBT Absorber
Design Status Update

Project X Collaboration Meeting, 11-April-2012

Curt Baffes: cbaffes@fnal.gov

PX Doc DB ID: Project X-doc-1027

MEBT Chopper Absorber Design Status Update

- Requirements and Challenges
- Material Choice and Thermal Analysis
- PXIE Absorber Mechanical Packaging Concept
- Prototype Plans
- Backup Slides
  - Material Blistering
  - Preliminary Thermal Analysis
  - Mechanical Packing Details
  - Prototype Module Fabrication Processes

Background: Absorber Configuration

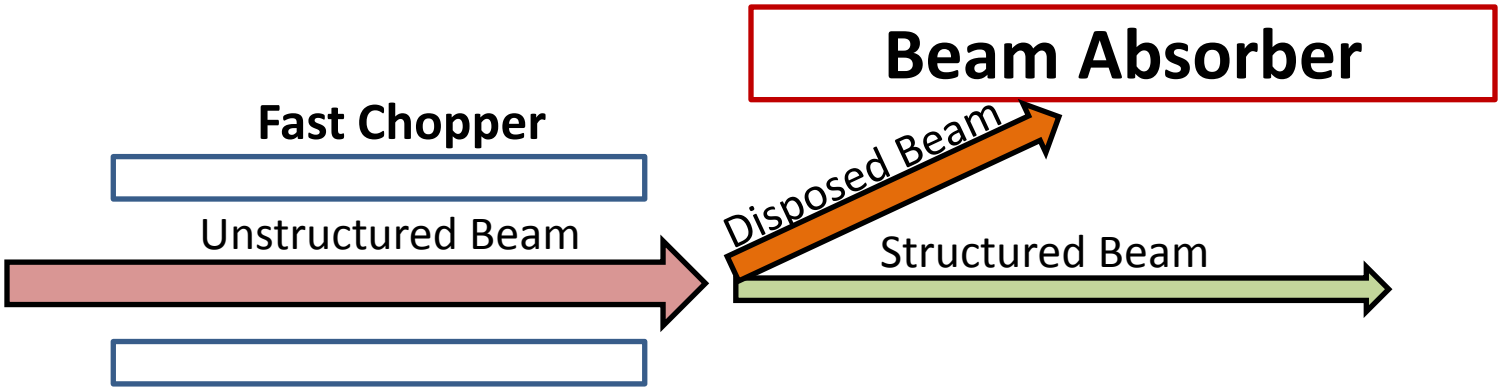

Functional Specifications Document:

https://projectx-docdb.fnal.gov:440/cgi-bin/ShowDocument?docid=964

Key Driving Absorber Requirements

- 2.1MeV Ions
- 21kW maximum absorbed power
- Beam size: $\sigma_x = \sigma_y = 2$mm
- 650mm maximum length

Key Derived Parameters

- 0.029rad grazing angle
- ~22 W/mm^2 maximum power density of the face of the absorber

Key Challenges

Challenge	Mitigation Approaches
Thermal concerns: • High power density • High operating temp. • Temp-induced stress	Geometry: Grazing angle of incidence Material: High-temp Molybdenum TZM Cooling: mm-scale cooling channels
Sputtering	Provide adequate erosion allowance in material, ~700um/beam-year expected.
Outgassing	Brute force pumping, 3000 l/s
Ion-induced blistering	Use blistering-resistant material

MEBT Chopper Absorber Design Status Update

- Requirements and Challenges
- Material Choice and Thermal Analysis
- PXIE Absorber Mechanical Packaging Concept
- Prototype Plans
- Backup Slides
  - Material Blistering
  - Preliminary Thermal Analysis
  - Mechanical Packing Details
  - Prototype Module Fabrication Processes

Blistering and Material Choice

- Hydrogen ions are implanted beneath the surface of the metal by the beam, form gas pockets, and rupture
- The expected peak particle fluence of 7.2E19 particles/m^2/s is severe as compared to the blistering threshold of many materials

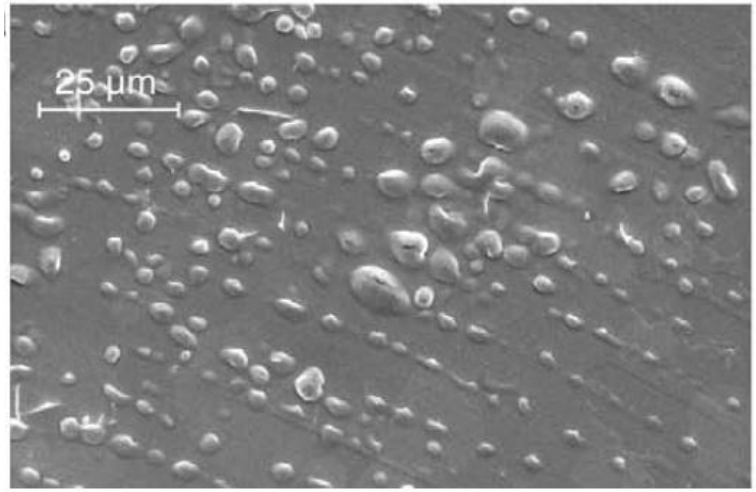

Blisters in Cu irradiated by 190keV proton beam, ref [1]

- This motivates the use of Molybdenum TZM, which exhibits an attractive combination of blistering resistance, thermal properties, and reasonable cost
- More details in backup slides

Analysis Coordinate System

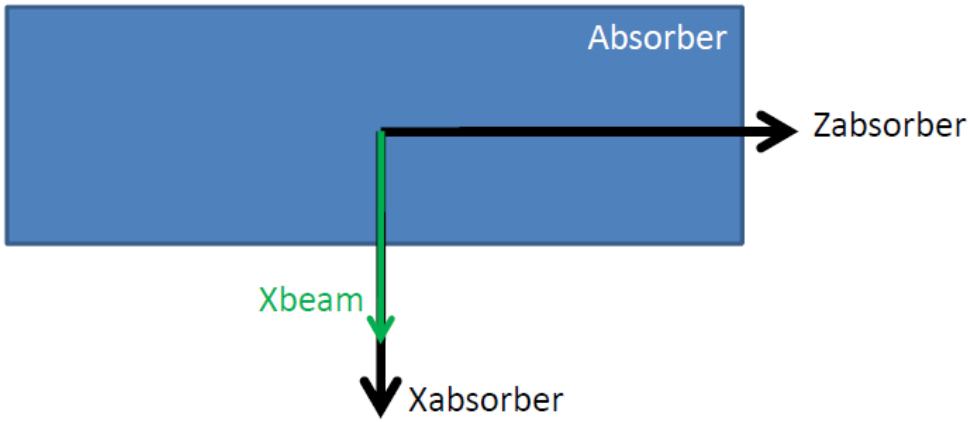

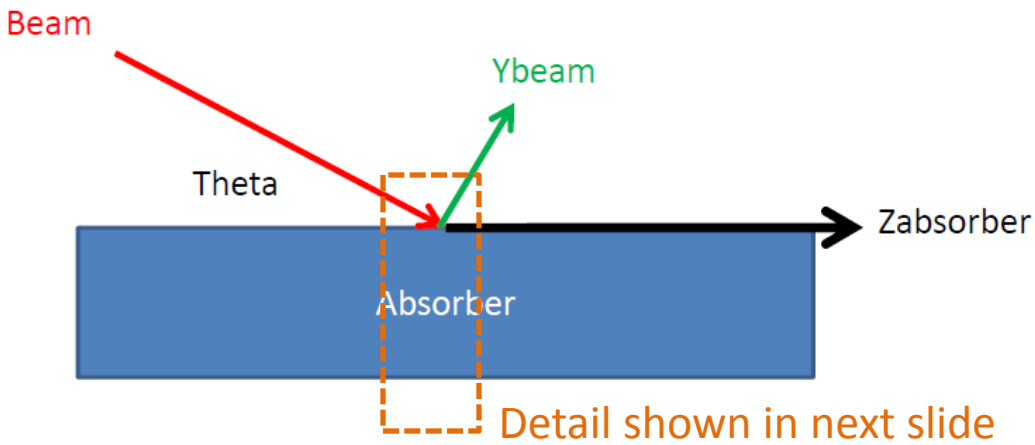

Cooling Channel Geometry

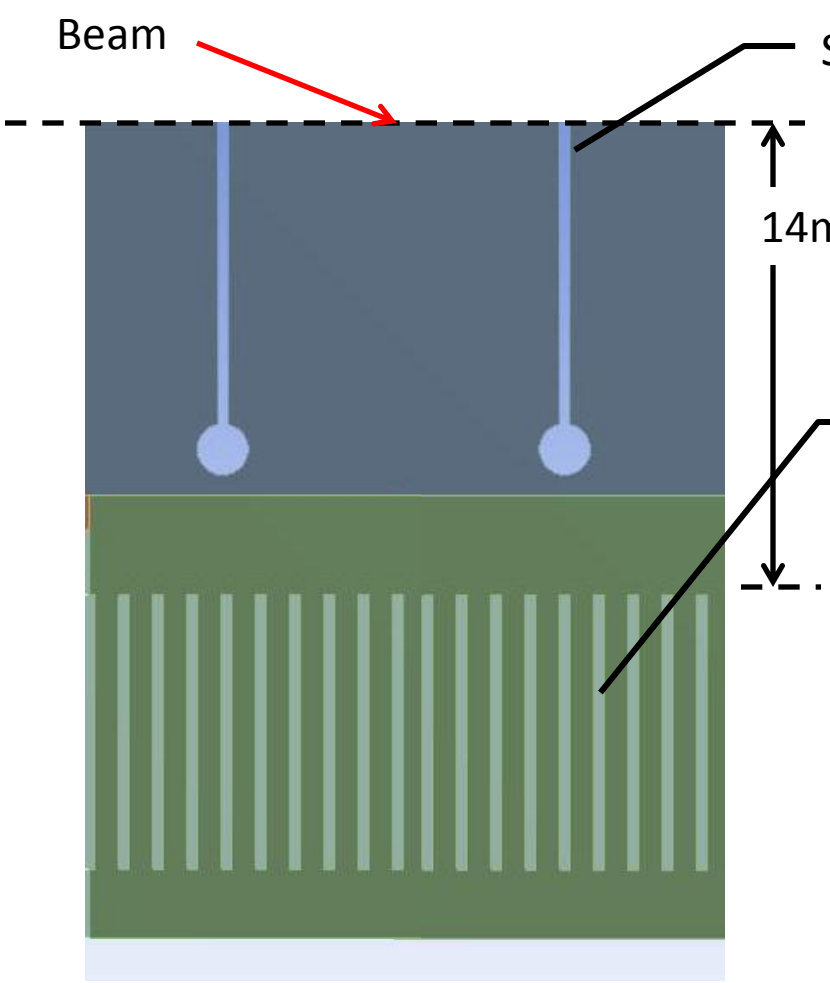

0.3mm wide X 8mm tall water channels
1mm channel pitch
0.7mm fin thickness

Laminar flow transverse to beam direction (into page), calculated average convection coefficient 6500 W/m^{2}k

Channel width set at minimum value that can be easily made using wire EDM techniques

Fin and facesheet parameters optimized for a TZM absorber

Two colors are modeling artifact: This is one piece of material

TZM Absorber @ 21kW Temperature Results

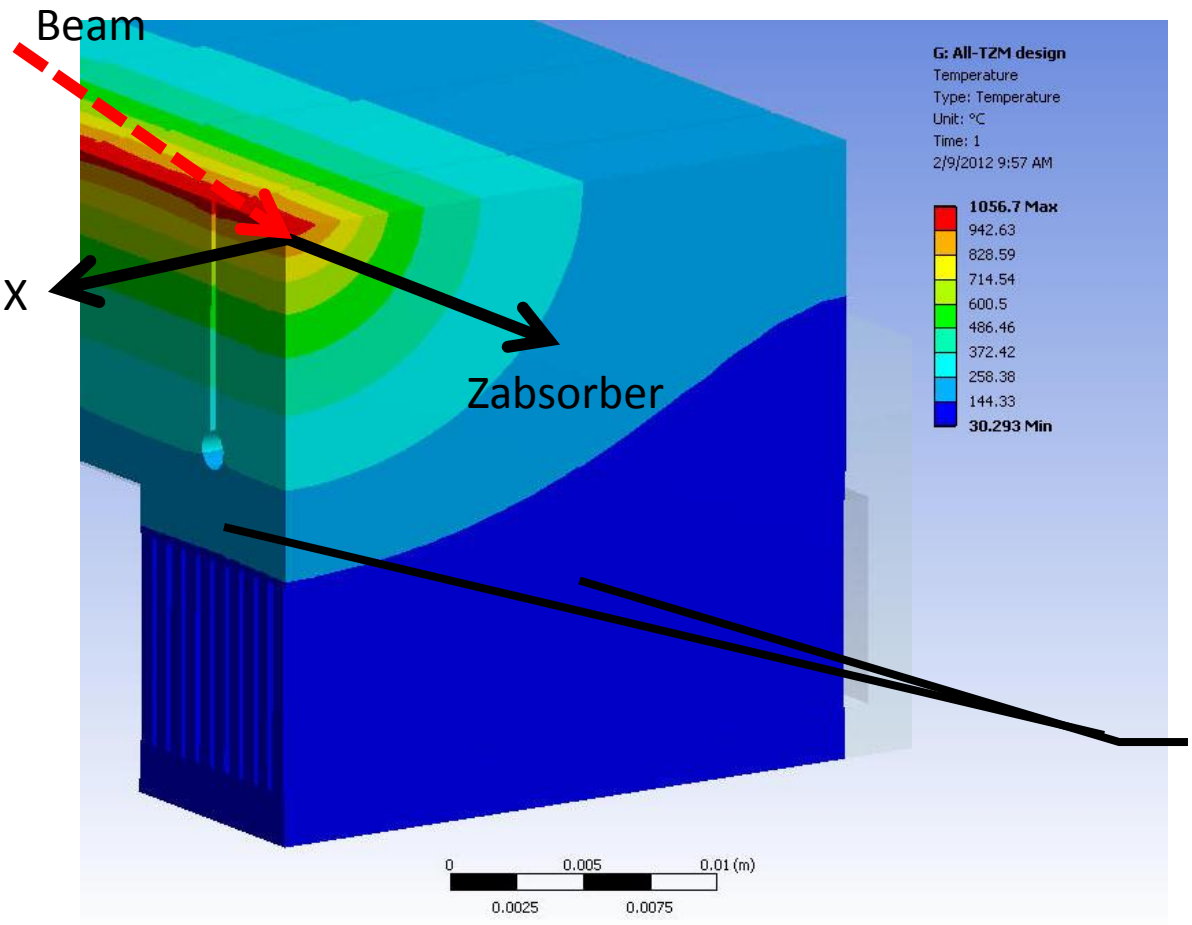

Max temp 1056°C on the beam absorbing surface

Mid-planes of absorber (symmetry boundary)

Stress Results

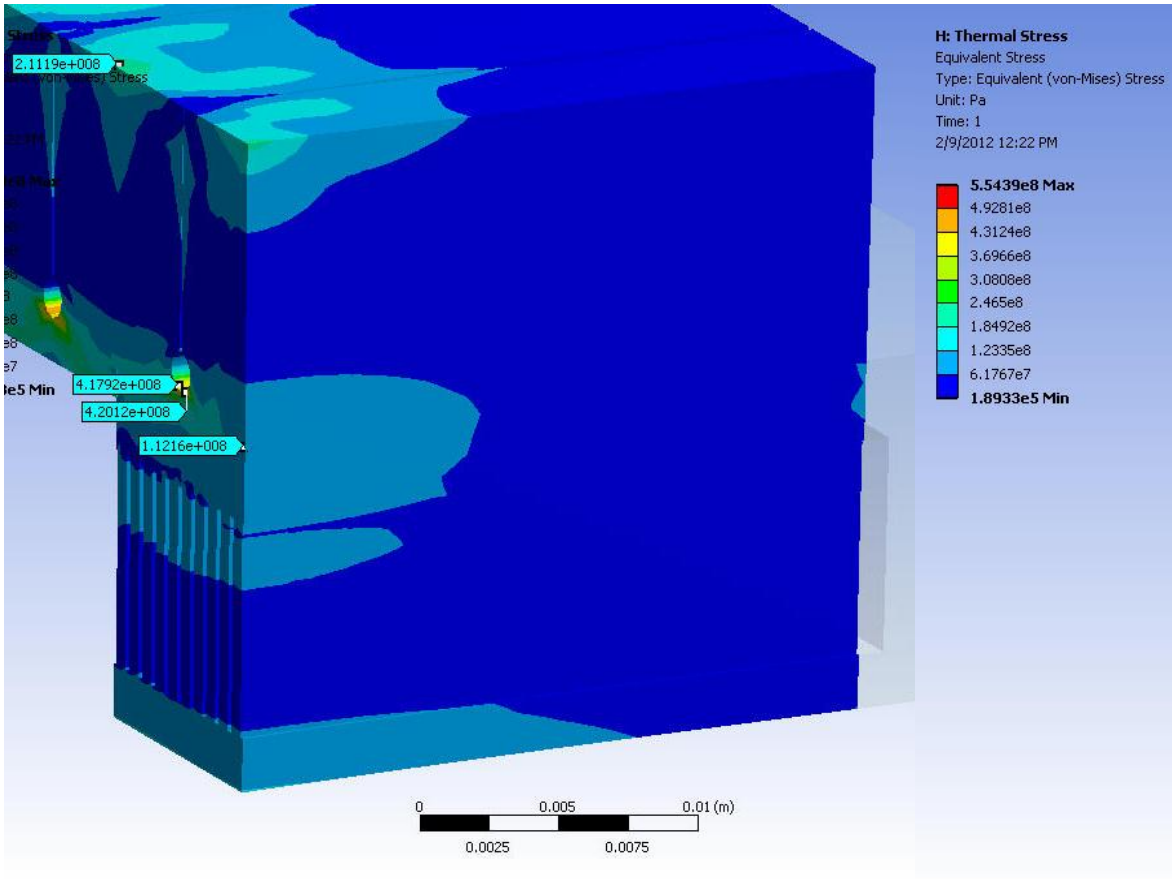

- Von Mises stresses shown in MPa, maximum value 450MPa
- Maximum stress very localized at root of relief slit
- Additional relief slit optimization may be warranted

Stress/Temperature Conditions

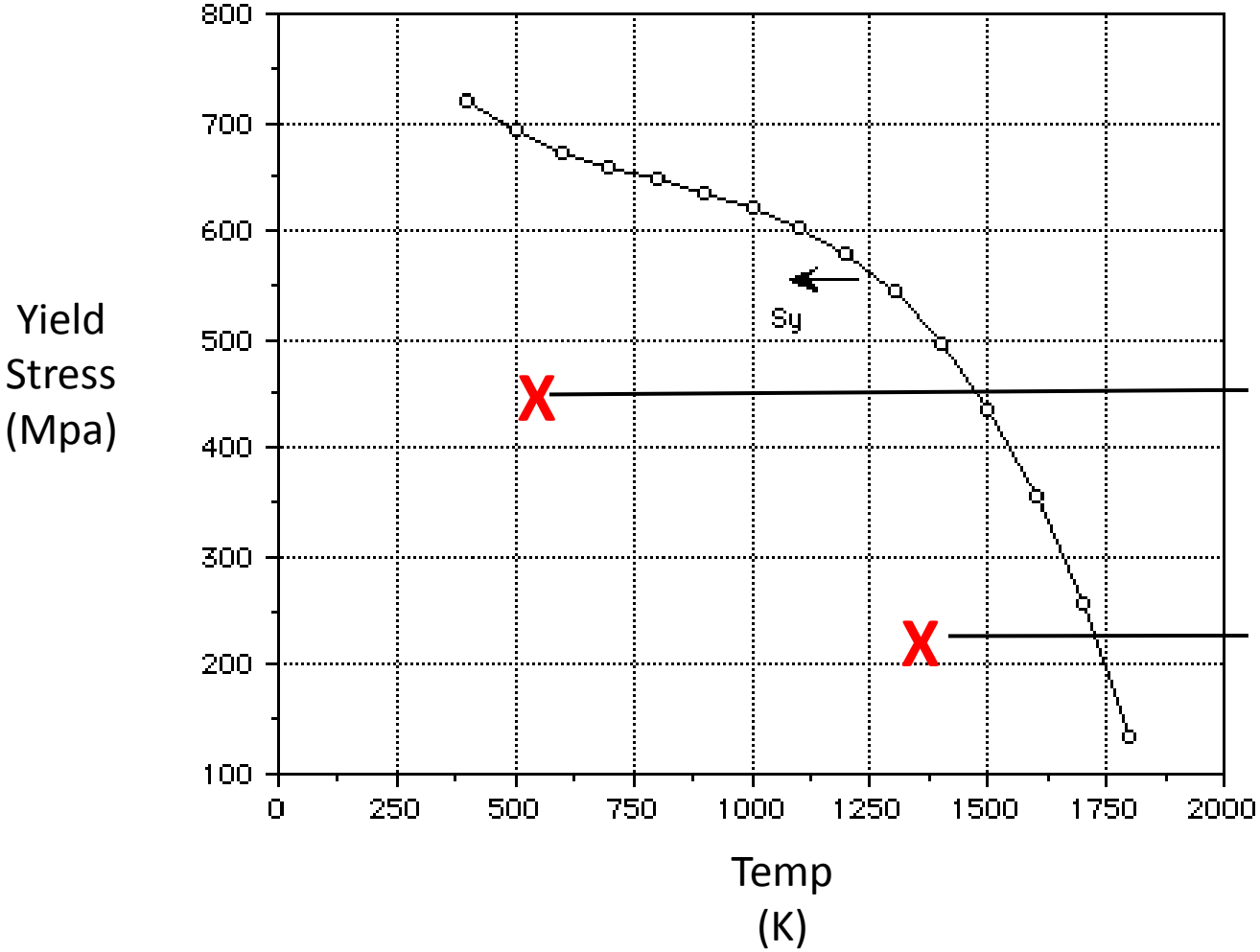

Root of axial stress-relief slit fillet

Absorber surface

Analysis Conclusions and Next Steps

- TZM absorber would operate at high temperatures and appreciable stresses
- This preliminary analysis shows that predicted operating conditions are within the capability of the material
- Analysis next steps
  - Analyze specific beam conditions for planned E-beam test
  - Correlate analysis and test results

MEBT Chopper Absorber Design Status Update

- Requirements and Challenges
- Material Choice and Thermal Analysis
- PXIE Absorber Mechanical Packaging Concept
- Prototype Plans
- Backup Slides
  - Material Blistering
  - Preliminary Thermal Analysis
  - Mechanical Packing Details
  - Prototype Module Fabrication Processes

Motivation for a Modular Design

- The design we're moving towards has:
  - Complex features, with heavy use of EDM
  - Expensive materials
  - Some amount of risk associated with the fabrication process
- We can minimize this risk by designing a modular absorber
- Benefits of a modular absorber:
  - Lower value-added during machining process
  - Ability to replace modules rather than absorbers
  - Planned electron beam testing can be done on a high-fidelity module prototype rather than a sub-scale mockup

Module Configuration

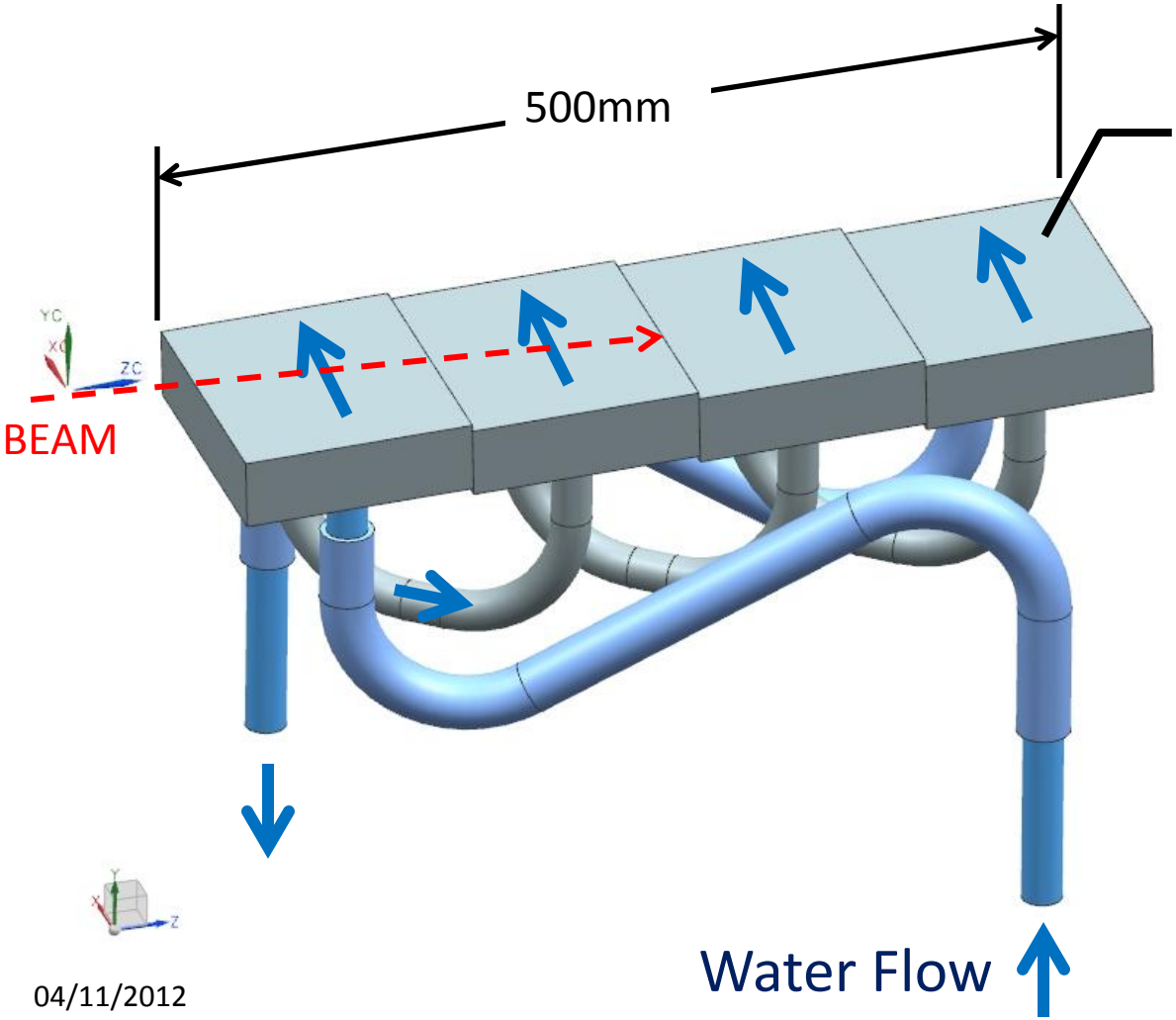

Envelope representation: details of module not captured

4-pass system

Parallel flow within each module

Serial flow from module-to-module

Module Geometry

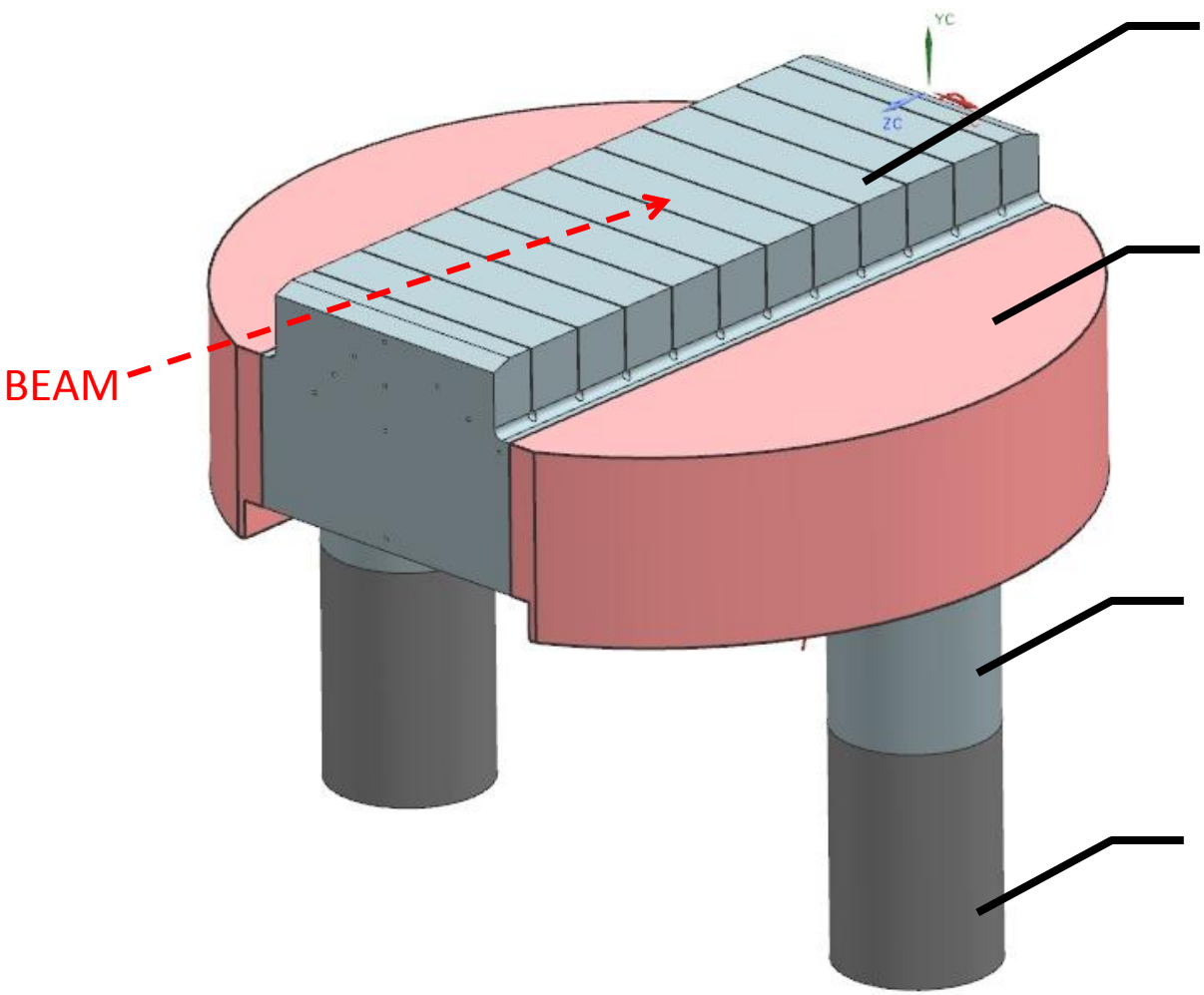

Absorber Surface
(Mo TZM)

Manifold/Mounting
Surface
(Mo TZM)

Inboard Water Tube
(Mo TZM)

Outboard Tube
(Titanium)

Cartoon of Module Shadowing Implementation

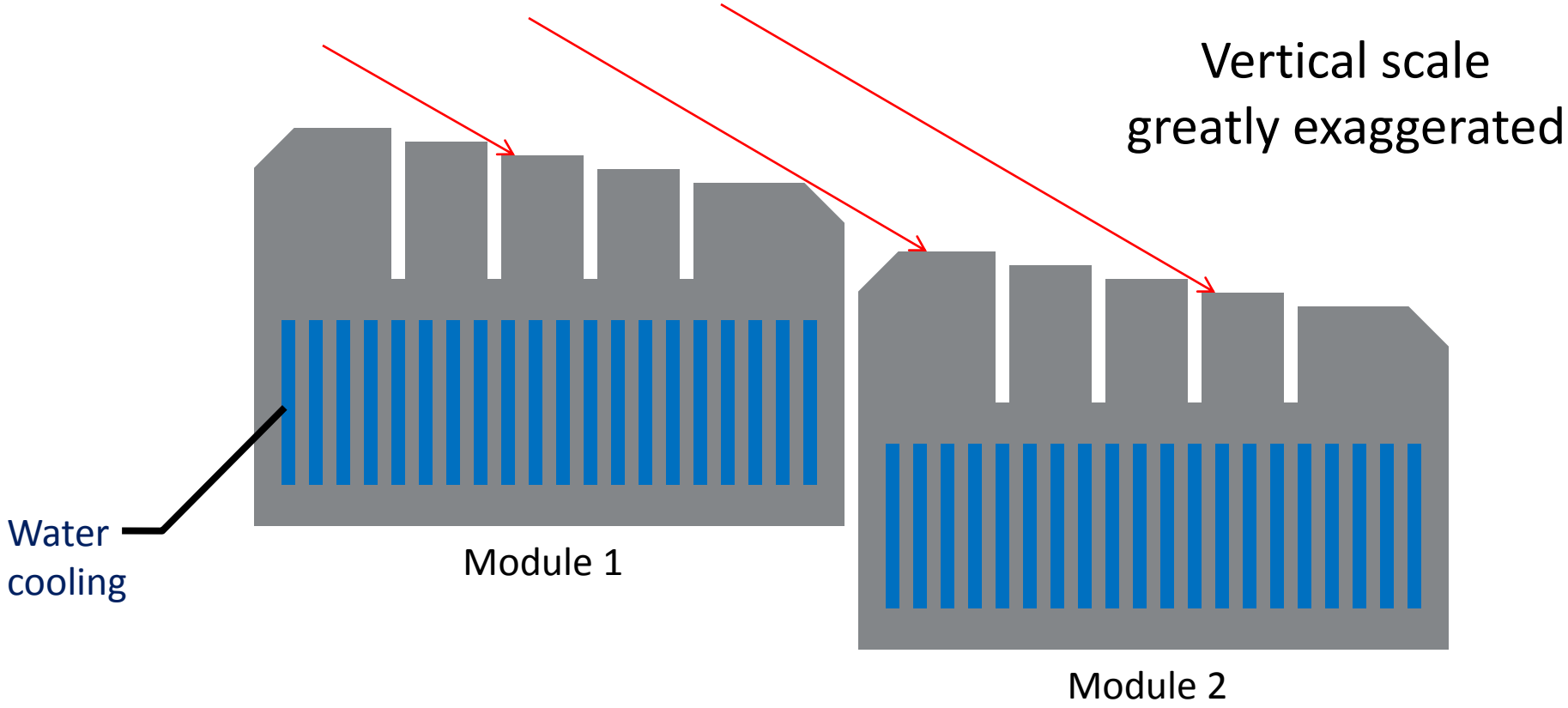

Both axial relief slits and modules have step height increments to prevent beam from striking vertical surfaces at low (near-normal) angles of incidence

MEBT Absorber Preliminary Packaging Concept

Absorbers mounted and co-located by support rails (blue)

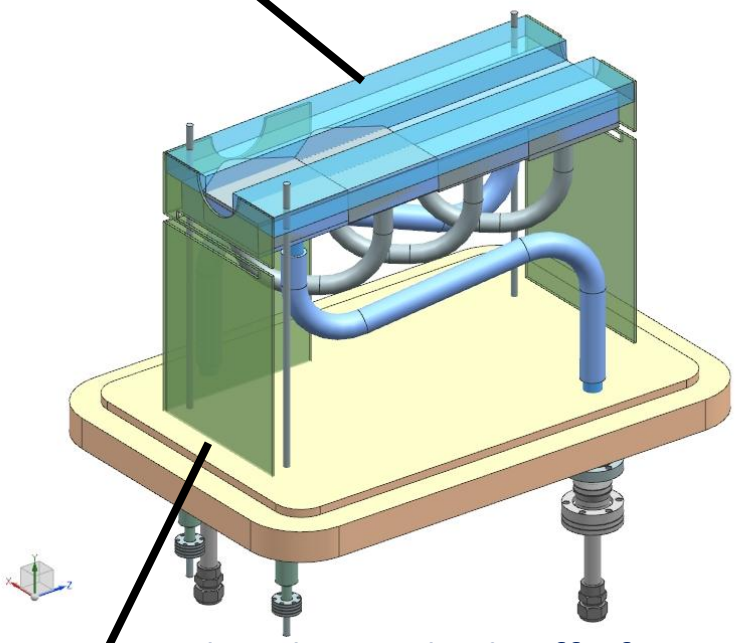

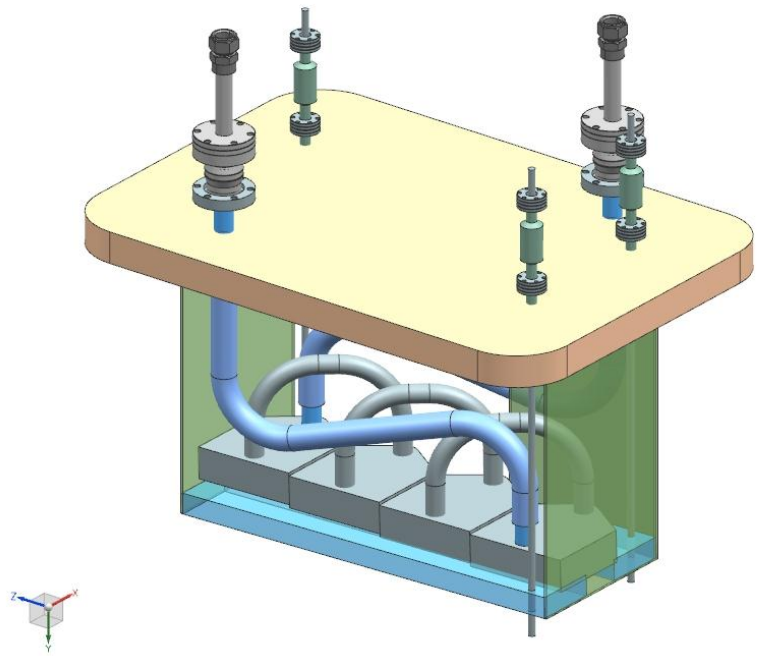

Absorbers is built off of an interface flange (peach colored), and is:

- Kinematically mounted (i.e. statically determinate)
- Adjustable by ~2mm per Degree of Freedom in tip, tilt and piston. We can adjust angle slightly, we can not move the absorber in and out of the beam
- Electrically isolated relative to flange and vacuum enclosure

MEBT Preliminary Packaging Concept: Absorber Installation

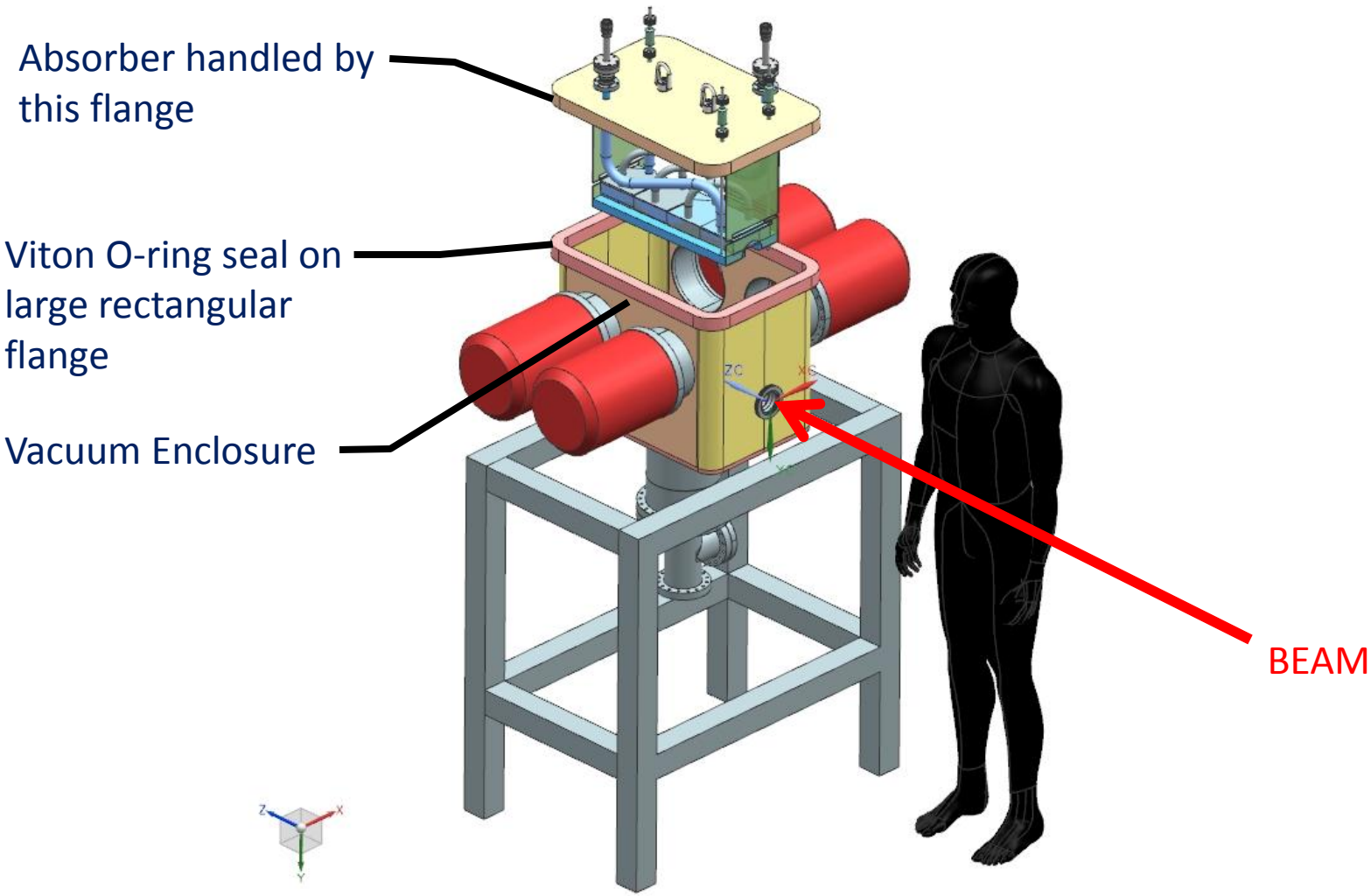

MEBT Absorber
Preliminary Packaging Concept

Absorber enclosure: vacuum vessel, common vacuum with beamline

Pumping: Qty. 4 Turbos 3000l/s pumping speed total

Camera system to monitor Optical Radiation from surface

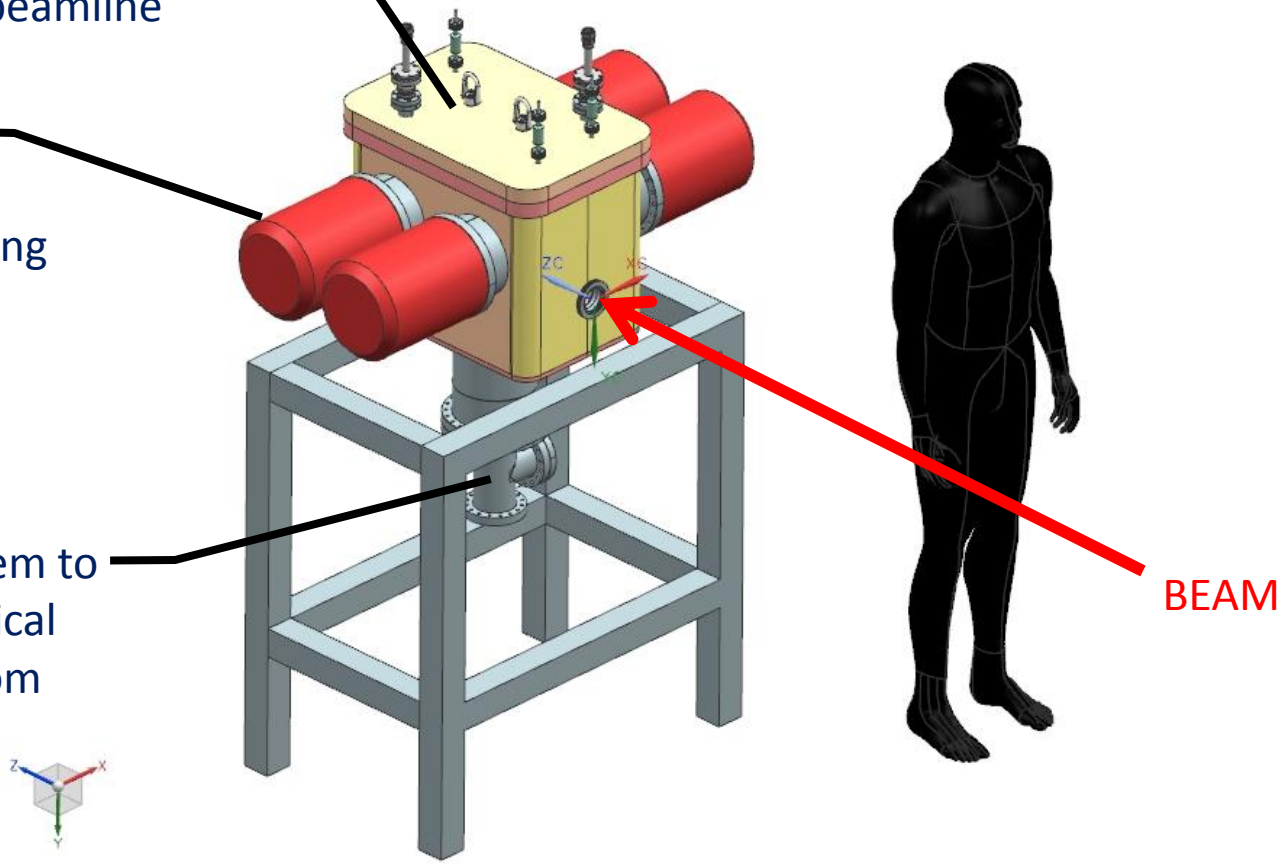

MEBT Chopper Absorber Design Status Update

- Requirements and Challenges
- Material Choice and Thermal Analysis
- PXIE Absorber Mechanical Packaging Concept
- Prototype Plans
- Backup Slides
  - Material Blistering
  - Preliminary Thermal Analysis
  - Mechanical Packing Details
  - Prototype Module Fabrication Processes

Design Risks

Key absorber design risks include:

- High temperatures in absorber material
- Flow characteristics and heat transfer
- Manufacturing processes
  - Machining of Mo TZM
  - TZM-to-Ti transitions
  - Ti-to-stainless transitions
- Module-to-module and global alignment stability
- Blistering of TZM material in H- Beam

Addressed by prototype testing

Prototype Approach

- Prototype a single absorber module
  - 116mm length
  - Single-pass water cooling
- Test in existing E-beam gun
  - 30kV, 0.17A, ~5kW beam
  - Gun system is flexible enough to provide a range of beam conditions
- Angle of incidence between absorber and beam 120mrad
  - 4X greater (more normal) than PXIE plan
  - Allows us to replicate peak power deposition within limited length of test module

Prototype Test

Absorber

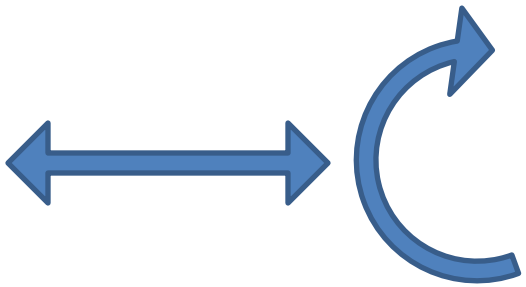

Manual adjustment of position and angle

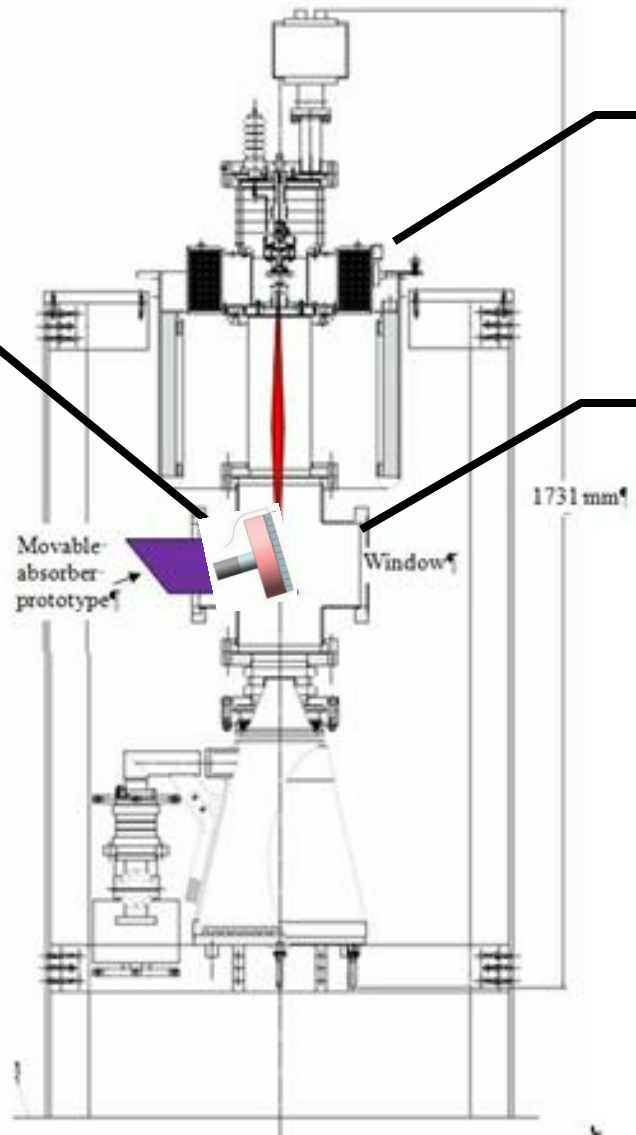

Electron gun, re-used from electron cooling program

6 way cross provides interfaces for:

- Absorber mounting
- Pump(s)
- Diagnostics (beam profile, light generated at absorber surface)

Test Implementation:
L. Prost, J. Walton

Prototype Module Geometry

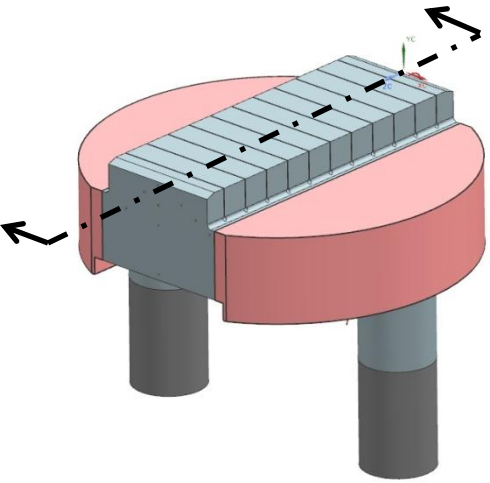

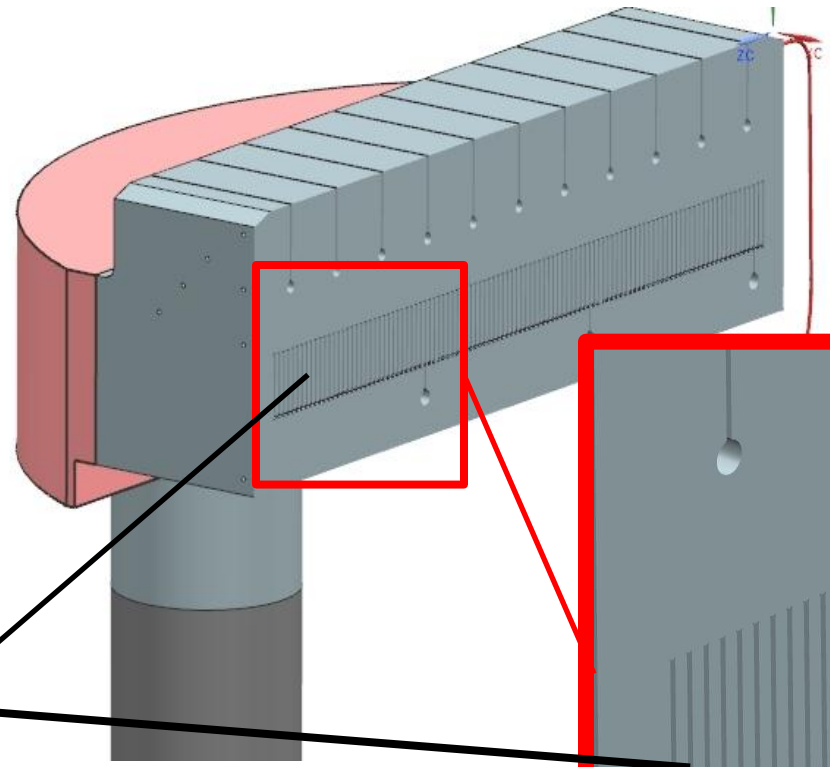

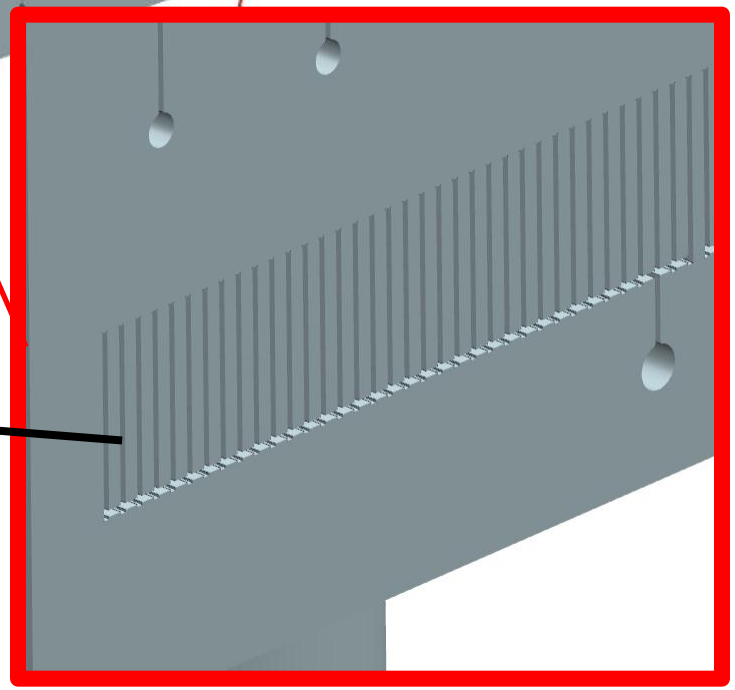

Cooling Channels:
- Wire EDM features
- 300um wide
- 1mm pitch
- “Bow Tie” shape for velocity profiling

Status

- Electron test bench being assembled
  - First cathode emission within the next month
  - Beam characterization to be done prior to absorber test
- Long-lead Molybdenum TZM material on order, expected mid-May
- Prototype absorber module design being finalized
- In discussions with vendors for machining and manufacturing process development

MEBT Chopper Absorber Design Status Update

- Requirements and Challenges
- Material Choice and Thermal Analysis
- PXIE Absorber Mechanical Packaging Concept
- Prototype Plans
- Backup Slides
  - Material Blistering
  - Preliminary Thermal Analysis
  - Mechanical Packing Details
  - Prototype Module Fabrication Processes

Blistering

- In November, we presented thermal analysis for a Copper beam absorber

  https://projectx-docdb.fnal.gov:440/cgi-bin/ShowDocument?docid=961

- It was pointed out to us (by V. Dudnikov) that beam-induced blistering could be a concern
- We have investigated blistering, and have found that it is likely a show-stopper for a Copper absorber design
- This has motivated us to change the proposed absorber material to a Molybdenum alloy (Mo TZM)

Blistering Mechanism

- Hydrogen ions are implanted beneath the surface of the metal by the beam
- Ions coalesce into pockets of gas beneath the surface
- High pressure builds up in these gas pockets, and they rupture
  - Surface is roughened and eroded
  - Debris is generated
  - Vacuum bursts occur as individual gas bubbles rupture

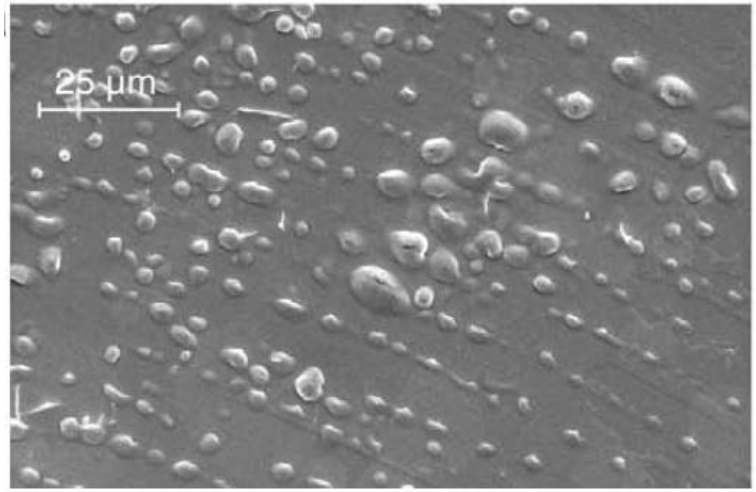

Blisters in Cu irradiated by 190keV proton beam, ref [1]

Existing Data

- A literature search was done to look for relevant data
- A list of the most relevant references may be found here:

  https://projectx-docdb.fnal.gov:440/cgi-bin/ShowDocument?docid=989
- Data is most available for beam at normal incidence with E≤200keV
  - Our beam is 2.1MeV incident at a steep angle (~.029 rad)
  - Particles will travel of order 20um along the beam direction, and end up at a depth (from the surface) of ~0.6um
  - "Effective energy" with the same implantation depth at normal incidence is ~100keV
- A wide variety of test conditions in the literature makes direct comparisons to existing data challenging

Blistering Trends

- In general, blistering is more severe when…
  - Current density is high
    - Less time for diffusion/desorption to occur
  - Particle energy is low
    - Implantation depth is lower, so imposed gas concentration is higher
    - Blistering effects are well documented in the 1keV-200keV range
  - Hydrogen solubility and diffusion rates of the target metal are low
  - Metal temperature is low
    - diffusion rate of gas increases with temp.
  - Metal surface is smooth
    - less free surface area for gas desorption

Particle Fluence

- For this absorber we expect (at the center of the beam profile):
  - Particle fluence 7.2E19 particles/m^2/s
  - Current density 11 A/m^2
  - (Above is based on Functional Specification values of 10mA max current, $\sigma_x = \sigma_y$ = 2mm, derived grazing angle of .029rad)
- Our current density is comparable to what's in the literature, but our total particle fluence is very high
- Blistering threshold for Cu: 1-4E21 particles/m^2 [1]
  - We would reach this in less than 1 minute
  - This motivates a search for other materials

Qualitative Material Comparison

Better blistering resistance

Material	Blistering Threshold*: (particles/m^2)	Thermal Conductivity (W/m °K)
Copper	~2E21 [1]	400
Tungsten	~3E22 [1]	175
Nickel	<6E22 [2]	90
Molybdenum	>2E23 [3]	140
Pure Iron	~1E24 [1]	80
Mo TZM	>1E24 [3,4]	125
Palladium	~2E24 [1]	70
Vanadium	>1E24 [1]	30
Tantalum	>2E24 [1]	57

*This comparison is somewhat dubious, because threshold values shown correspond to a wide variety of test conditions. So it's apples to oranges, but it does describe the approximate, qualitative trend.

Molybdenum TZM: Benefits

- Mo TZM is a dispersion-strengthened alloy of Molybdenum, containing small additions of Ti and Zr
- Favorable combination of properties for this application
  - Only Ta has unambiguously better blistering resistance
  - Literature blistering limit of >1E24 particles/m^2 corresponds to >5 hours of beam time. Goal would be to achieve diffusion/desorption steady state within that time
  - High thermal conductivity compared to Ta
  - High recrystallization temperature of ~1400°C
  - High yield strength @ temperature: ~500MPa @ 1000°C
  - Reasonable material costs (~$5K), compared to Ta options

Molybdenum TZM: Concerns

- Due to the lower (than Cu) thermal conductivity, a Mo TZM absorber would operate at very high temperature (~1000°C) compared to previous predictions

- Molybdenum can be brittle at room temperatures – we need to be careful with stresses in the cool portion of the absorber

- Use of TZM presents tractable manufacturing challenges
  - Much of the machining would be EDM
  - Practicing of welding and brazing techniques will be necessary

Molybdenum TZM: Concerns

- Two Mo isotopes have a neutron production threshold < 2.1MeV
  - ^{97}Mo (pn) ^{97}Tc, 1.11MeV threshold, 9.5% abundance
  - ^{100}Mo (pn) ^{100}Tc, 0.96MeV threshold, 9.6% abundance
- See Y. Eidelman report on this topic
  https://projectx-docdb.fnal.gov:440/cgi-bin/ShowDocument?docid=986
- A Mo absorber will produce more neutrons than a Cu absorber
- In PXIE, neutrons streaming back from the main beam dump will be a bigger issue. As such, we may be able to tolerate some neutron production in the absorber

Blistering References

[1] V.T. Astrelin et al, “Blistering of the selected materials irradiated by intense 200keV proton beam,” Journal of Nuclear Materials 396 p43, 2010

[2] M.K. Sinha, S.K. Das, and M. Kaminsky, “Temperature dependence of helium blistering in nickel monocrystals,” Journal of Applied Physics 49(1) p170, 1978

[3] S.K. Das, M. Kaminsky, and P. Dusza, “Surface damage of molybdenum and TZM alloy under D+ impact,” Journal of Vacuum Science and Technology 15(2) p170, 1978

[4] Y. Nakamura, T. Shibata and M. Tanaka, “Grain ejection from the surface of polycrystalline Molybdenum irradiated by intense H+ and H2+ ion beams,” Journal of Nuclear Materials 68 p253, 1977

MEBT Chopper Absorber Design Status Update

- Requirements and Challenges
- Material Choice and Thermal Analysis
- PXIE Absorber Mechanical Packaging Concept
- Prototype Plans
- Backup Slides
  - Material Blistering
  - Preliminary Thermal Analysis
  - Mechanical Packing Details
  - Prototype Module Fabrication Processes

Preliminary Thermal Analysis of a Mo TZM Absorber

- Though changing material to Mo TZM, we will maintain the same overall absorber configuration presented previously:
  - Previous work: https://projectx-docdb.fnal.gov:440/cgi-bin/ShowDocument?docid=961
  - Rectangular geometry, grazing angle of incidence, and axial stress relief slits as proposed in the Hassan et al. concept
  - mm-scale channel water cooling scheme as presented previously

- Dimensions of the stress relief slits and cooling channels have been re-optimized for the lower thermal conductivity of the Mo TZM material

Coordinate System

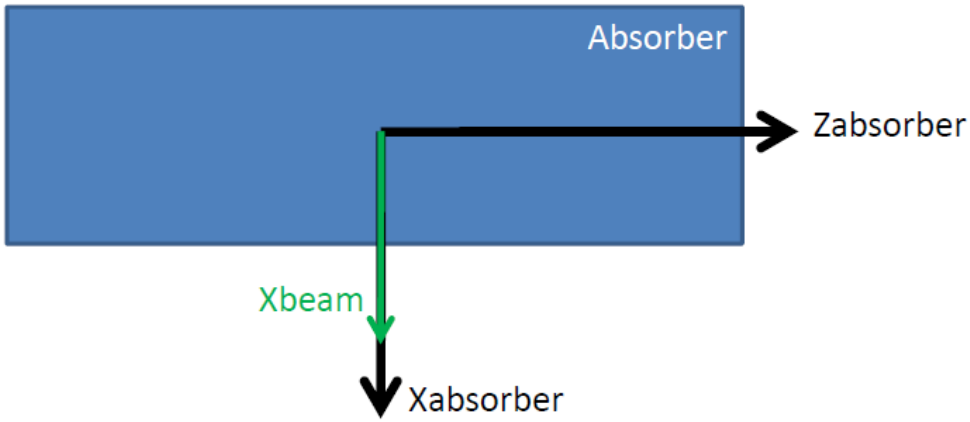

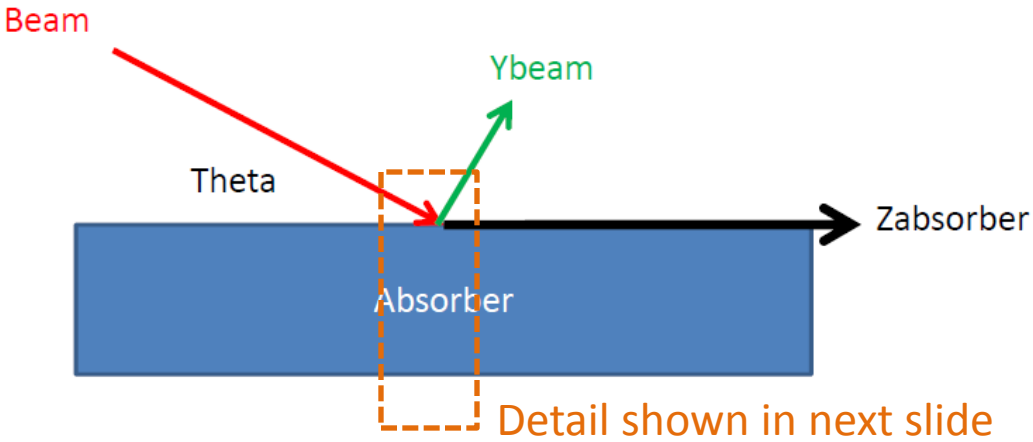

Channel Geometry

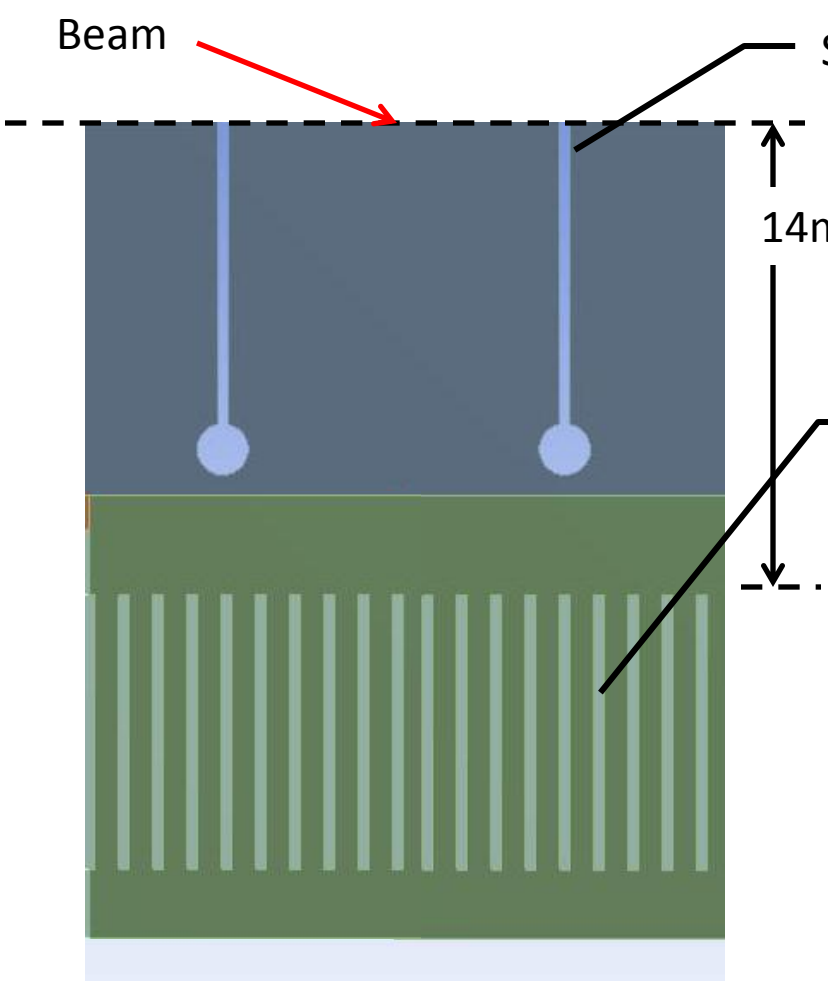

0.3mm wide X 8mm tall water channels
1mm channel pitch
0.7mm fin thickness

Flow transverse to beam direction
(into page)

Channel width set at minimum value that can be easily made using wire EDM techniques

Fin and facesheet parameters optimized for a TZM absorber

Two colors are modeling artifact:
This is one piece of material

Channel Flow Parameters

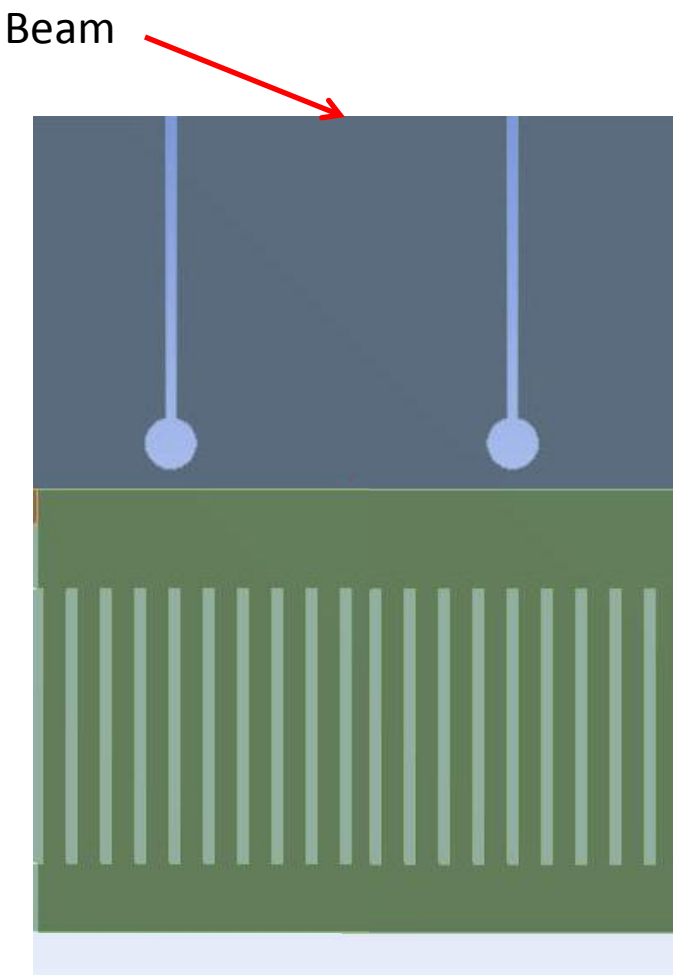

- Maximum single-channel heat transfer = 123W (heat reaction result from iterative analysis)
- Flow of ~5ml/s per channel
- Hydraulic Diameter = 580um
- Re = 1800 (laminar flow)
- Nu ~ 6 for relevant channel aspect ratio
- h ~ 6500 W/m^2k (average convection coefficient)
- 4-pass system for whole absorber
- 10 gpm total

TZM Absorber @ 21kW Temperature Results

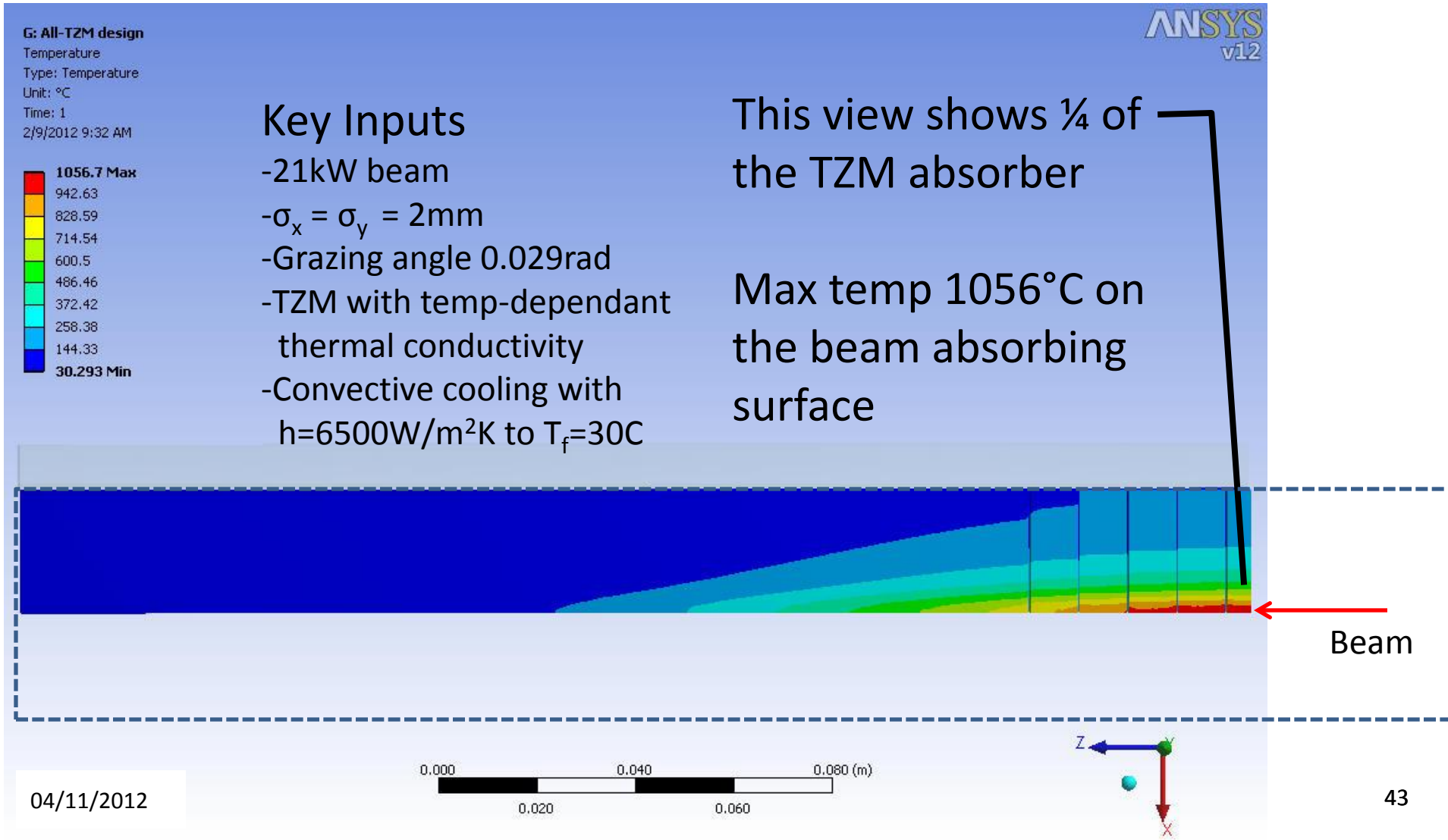

TZM Absorber @ 21kW Temperature Results

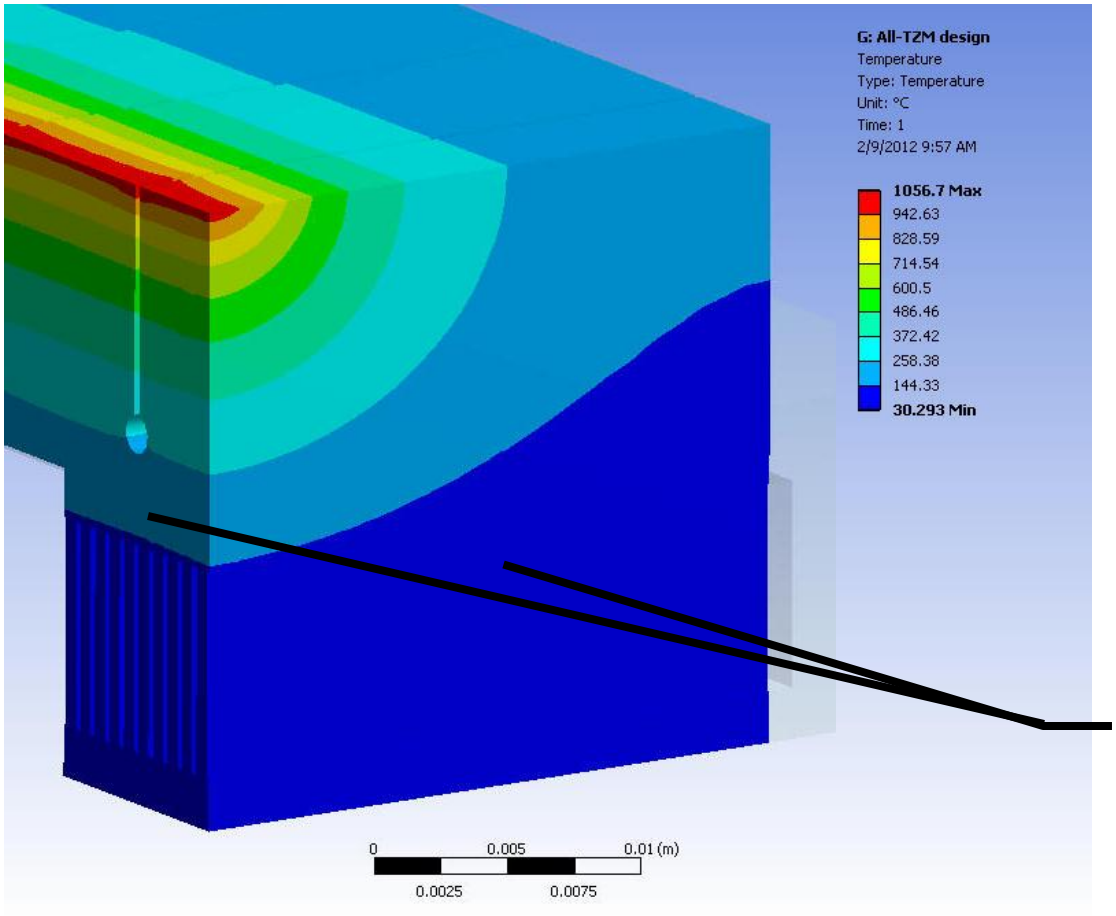

Max temp 1056°C on the beam absorbing surface

Mid-planes of absorber (symmetry boundary)

Channel Performance @21kW
Wall Temp

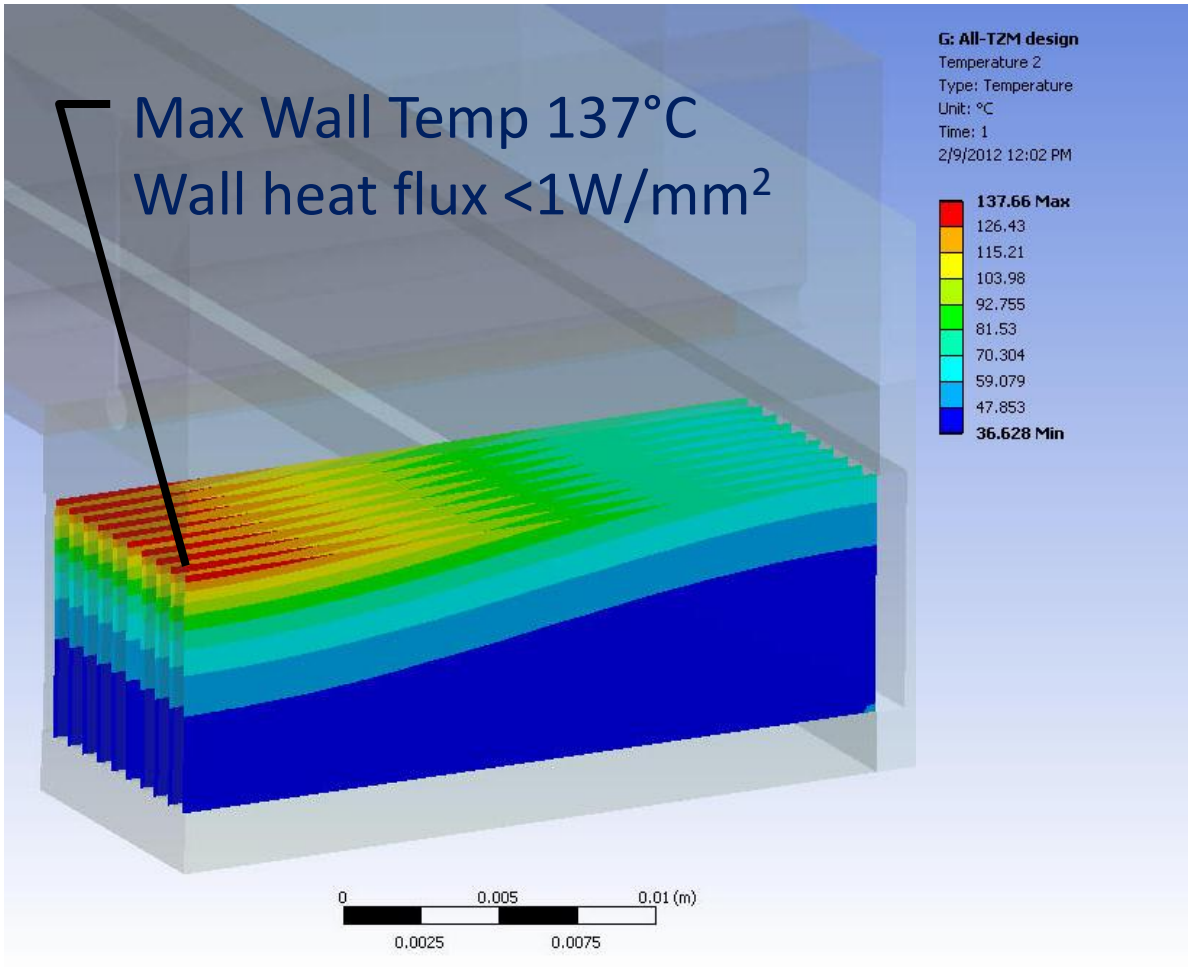

- In areas of wall super-heating, we may see nucleate boiling
- Nucleate boiling will increase heat transfer, up to the onset of transition boiling
- With a system bias pressure of ≤ 5atm, we could suppress boiling altogether, or tune system to optimize nucleate boiling heat transfer

Stress Results

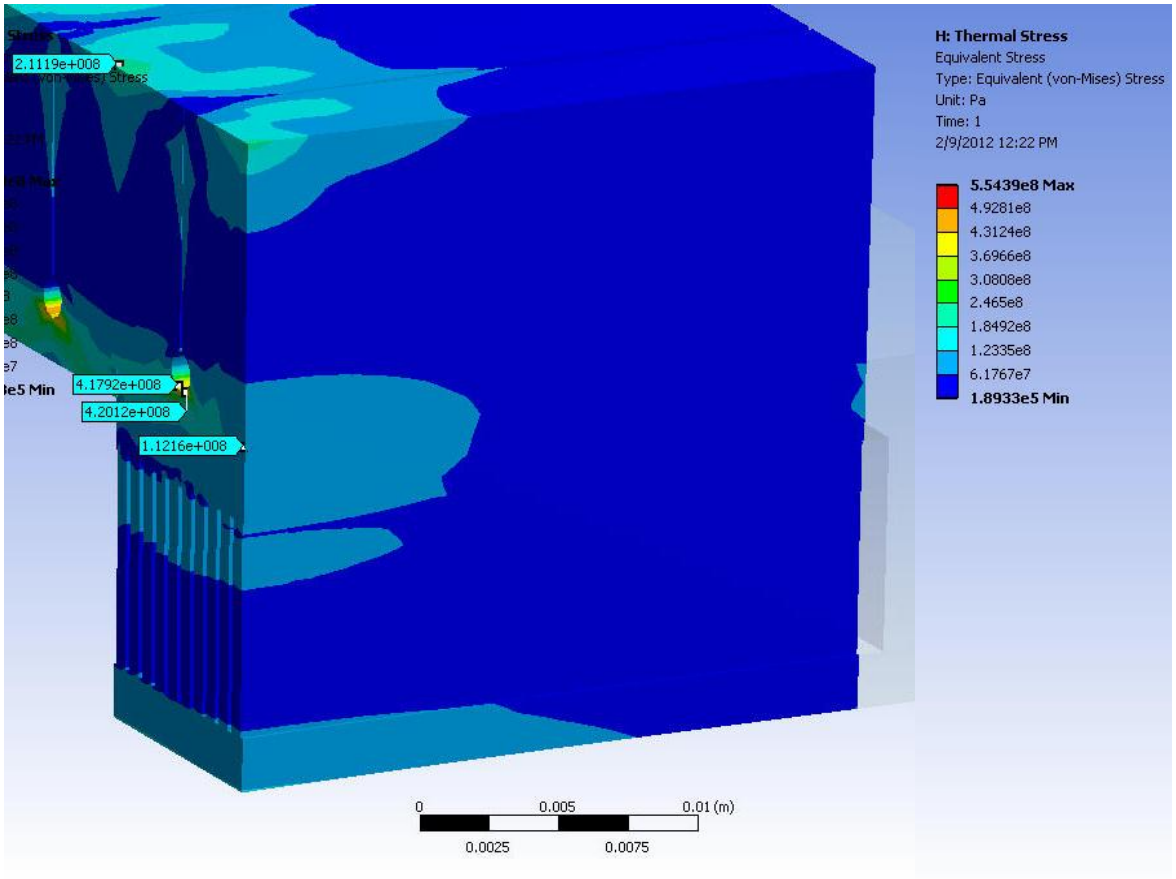

- Von Mises stresses shown in MPa, maximum value 450MPa
- Maximum stress very localized at root of relief slit
- Additional relief slit optimization may be warranted

Stress/Temperature Conditions

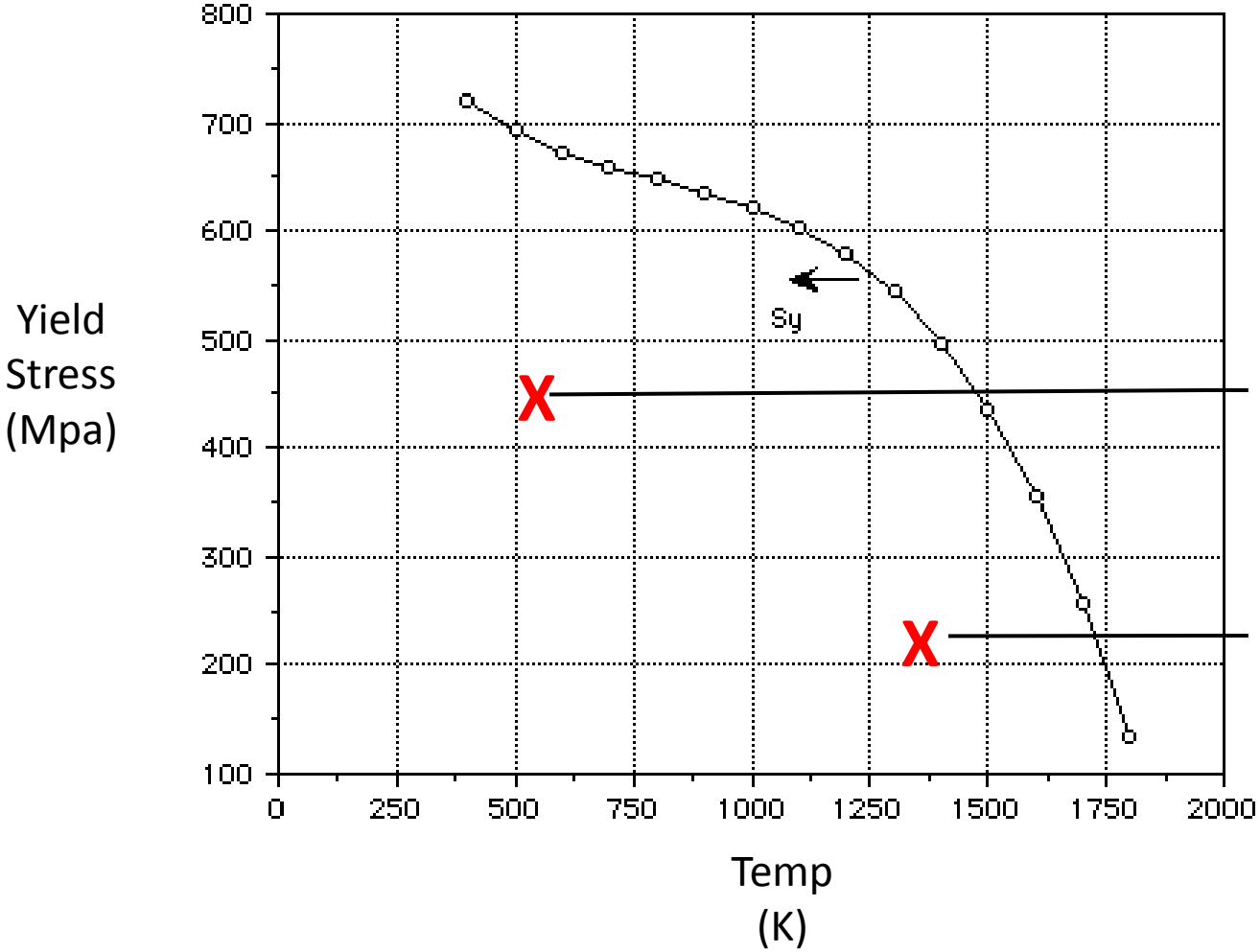

Root of axial stress-relief slit fillet

Absorber surface

Fluid Analysis of Prototype Absorber Module

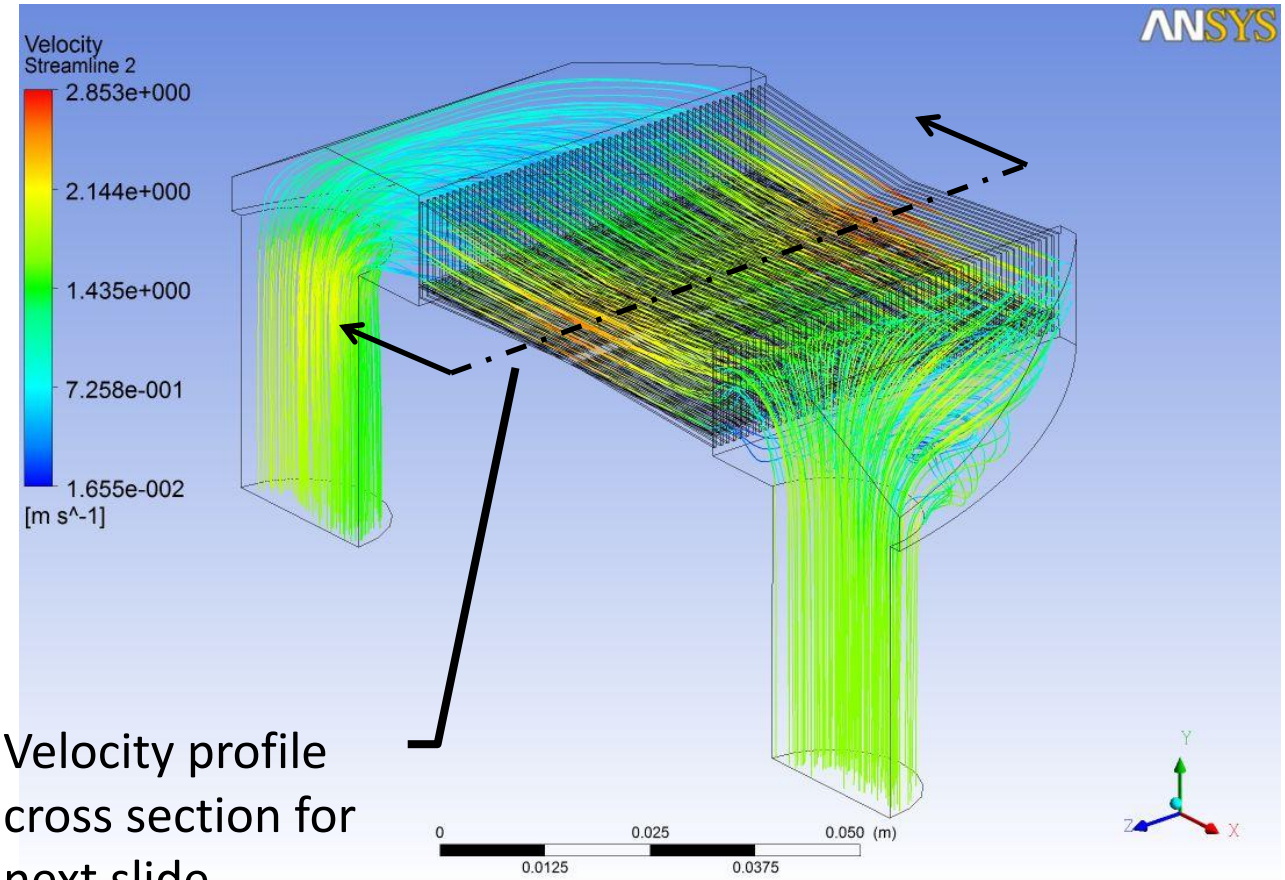

Velocity profile cross section for next slide

- Analysis performed to optimize flow characteristics of prototype module
- 10gmp nominal flow rate to provide velocities >2m/s across most of the cooling channels
- Pressure drop per module ~12kPa (1.7psi)

Velocity Profile at Channel Center

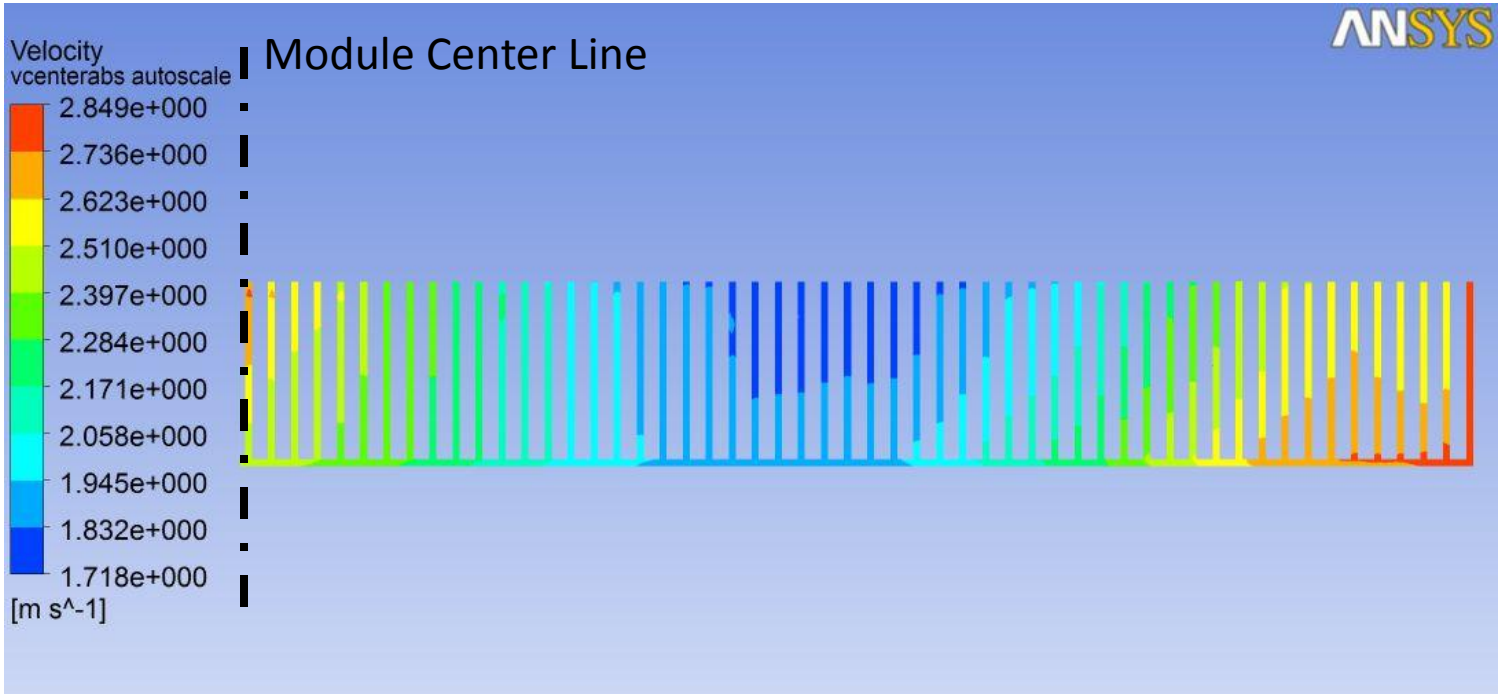

- Geometry optimized to flatten velocity profile across the cross section
- Prototype module geometry is limited by envelope of test setup
- With few transverse restrictions on the PXIE absorber, channel-to-channel flow uniformity should be easier to achieve

Analysis Conclusions and Next Steps

- TZM absorber would operate at high temperatures and appreciable stresses
- This preliminary analysis shows that predicted operating conditions are within the capability of the material
- Analysis next steps
  - Analyze specific beam conditions for planned E-beam test
  - Correlate analysis and test results

MEBT Chopper Absorber Design Status Update

- Requirements and Challenges
- Material Choice and Thermal Analysis
- PXIE Absorber Mechanical Packaging Concept
- Prototype Plans
- Backup Slides
  - Material Blistering
  - Preliminary Thermal Analysis
  - Mechanical Packing Details
  - Prototype Module Fabrication Processes

MEBT Absorber
Preliminary Packaging Concept

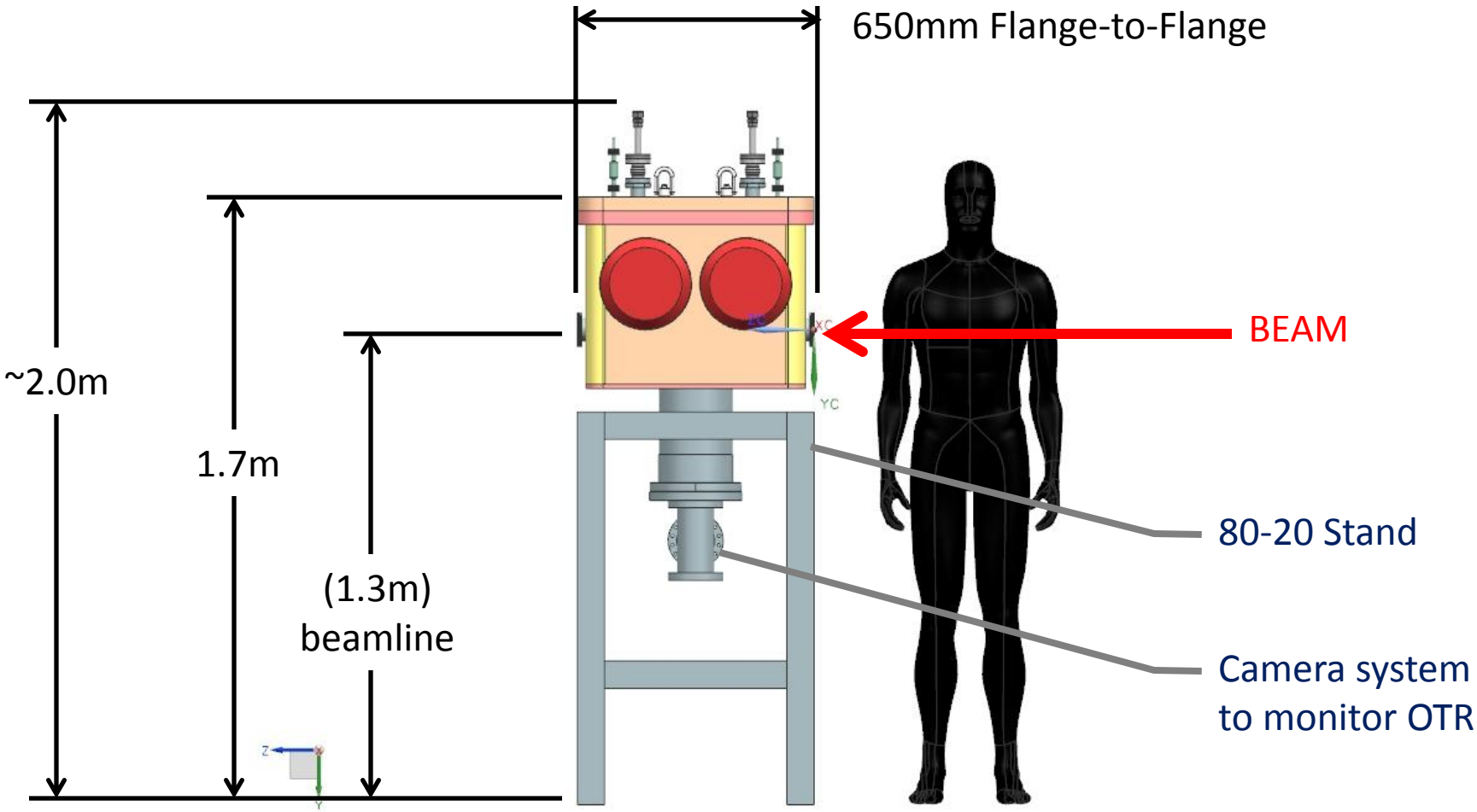

MEBT Absorber
Preliminary Packaging Concept

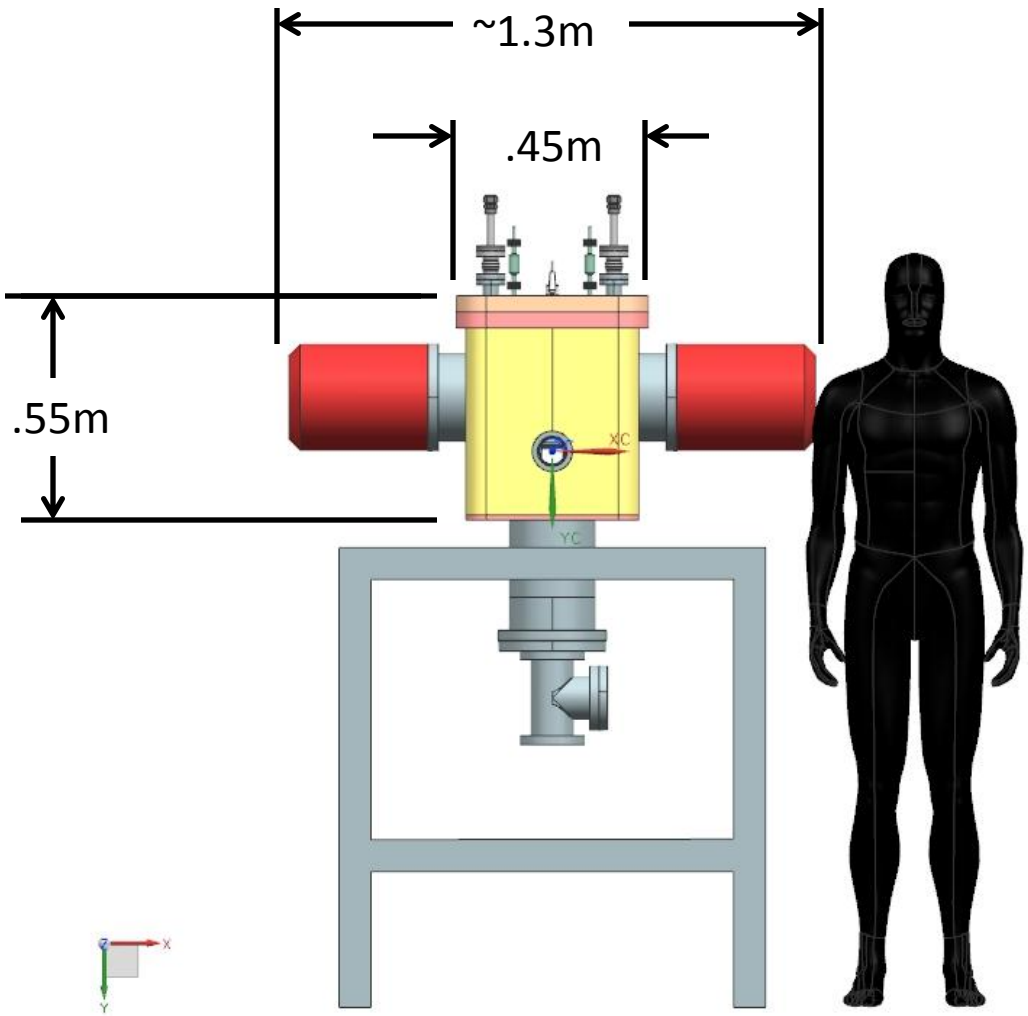

BEAM
into page

MEBT Absorber
Preliminary Packaging Concept

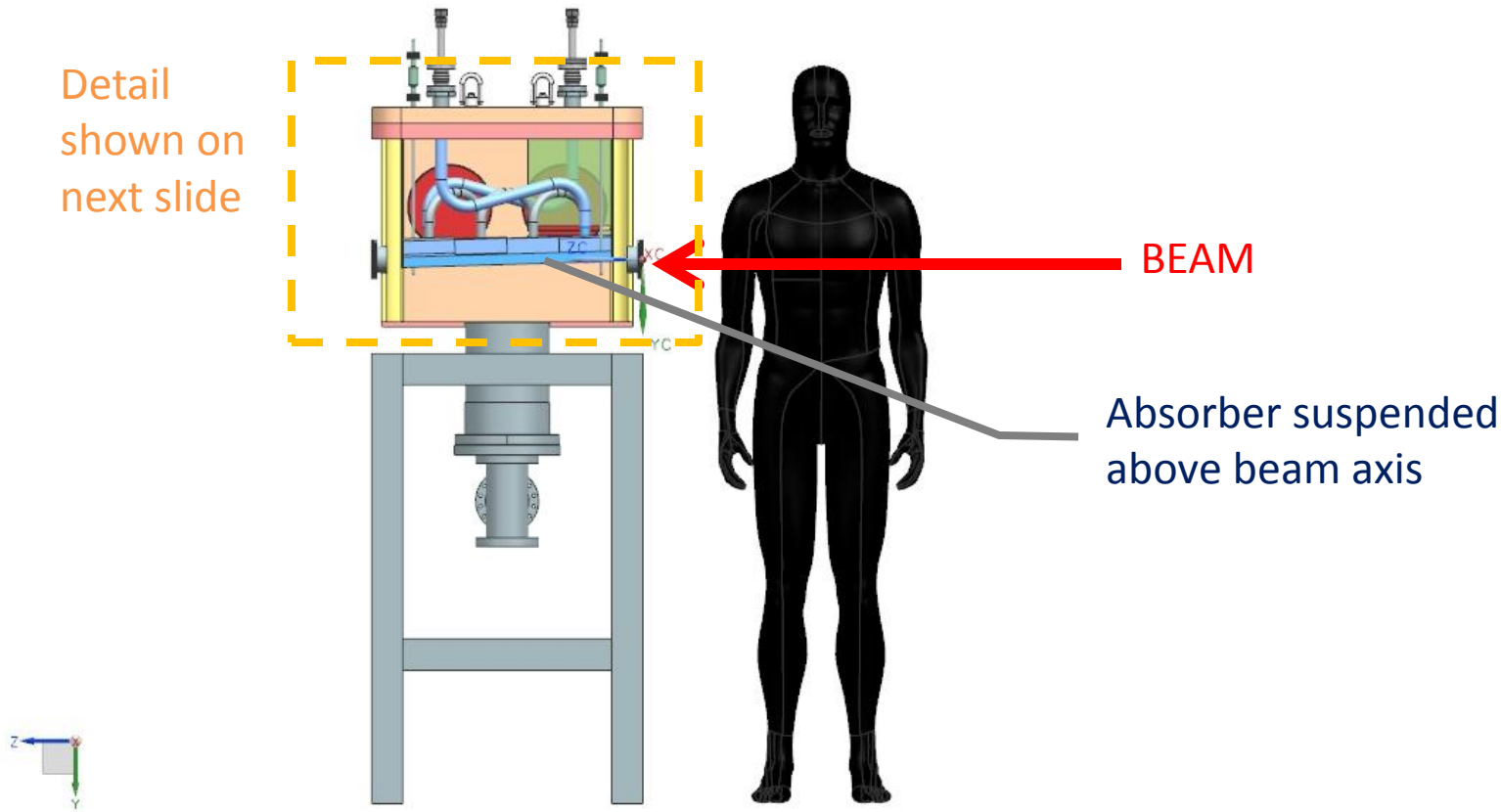

MEBT Absorber Preliminary Packaging Concept

Absorber supported from large peach-colored flange

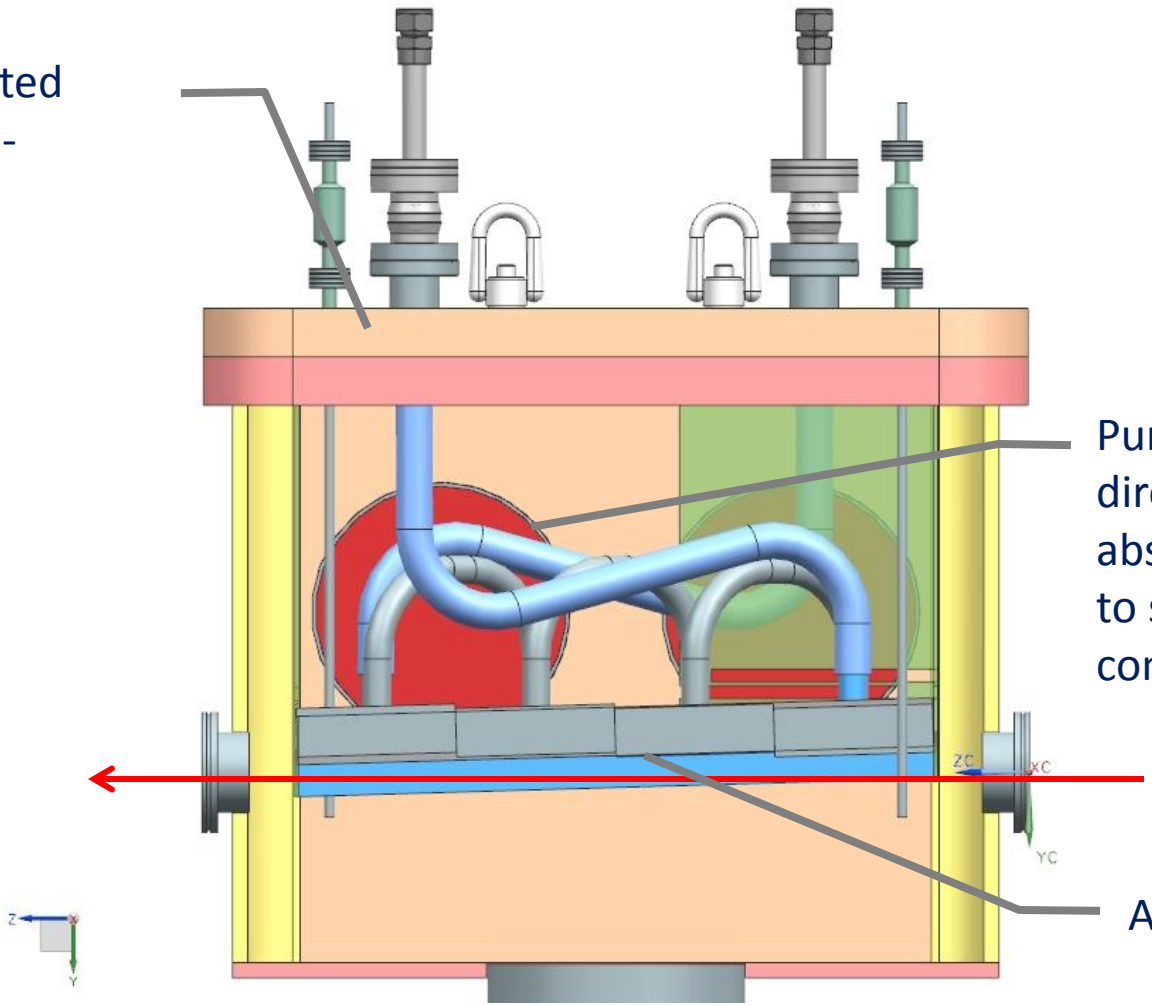

Pumping port: no direct view to absorber surface due to sputtering concern

BEAM

Absorber surface

MEBT Chopper Absorber Design Status Update

- Requirements and Challenges
- Material Choice and Thermal Analysis
- PXIE Absorber Mechanical Packaging Concept
- Prototype Plans
- Backup Slides
  - Material Blistering
  - Preliminary Thermal Analysis
  - Mechanical Packing Details
  - Prototype Module Fabrication Processes

Joining Processes

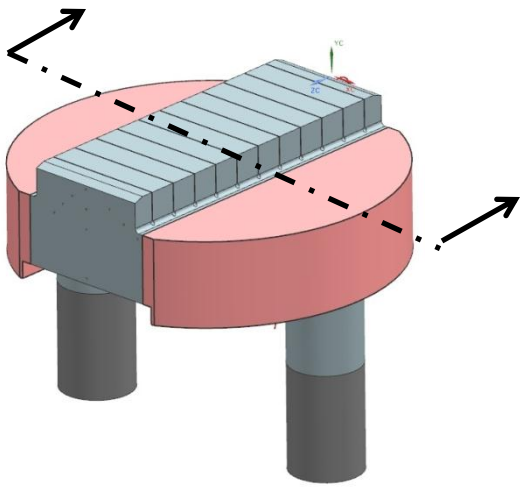

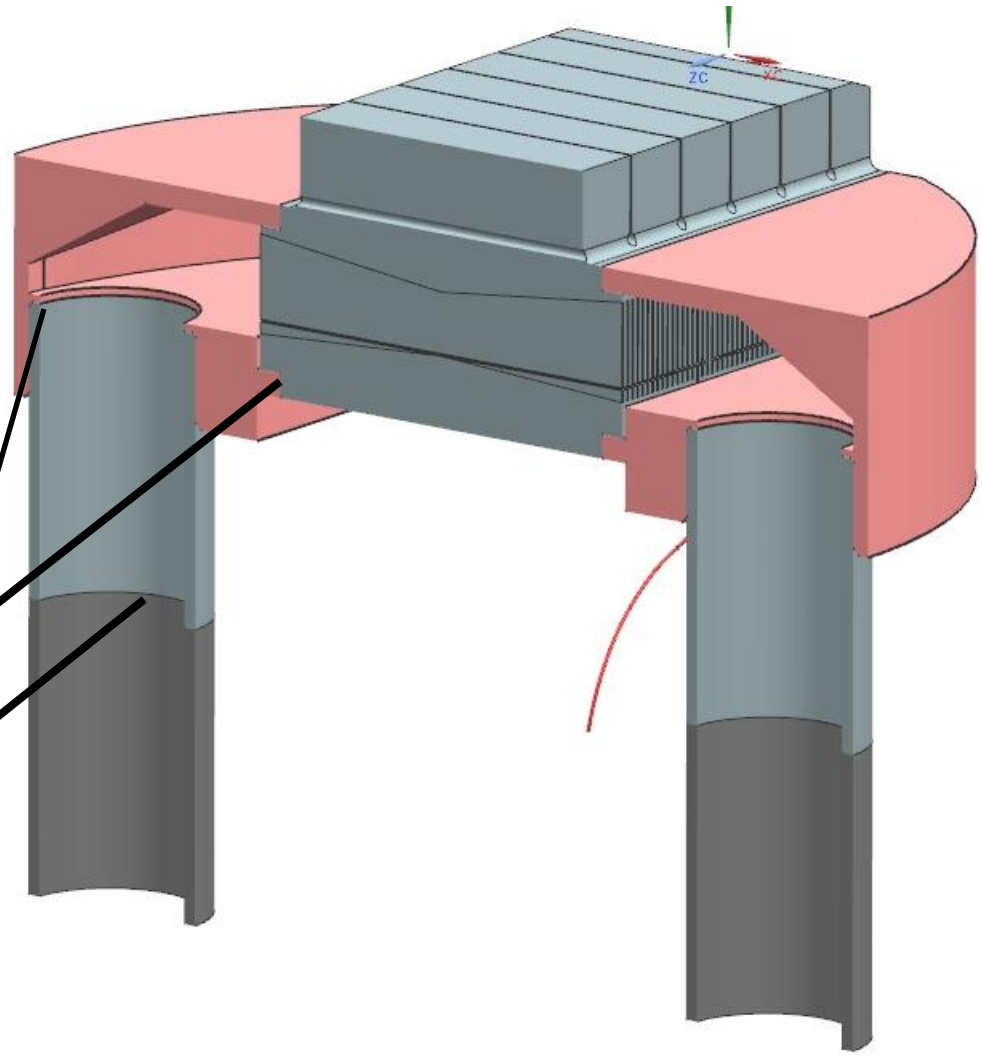
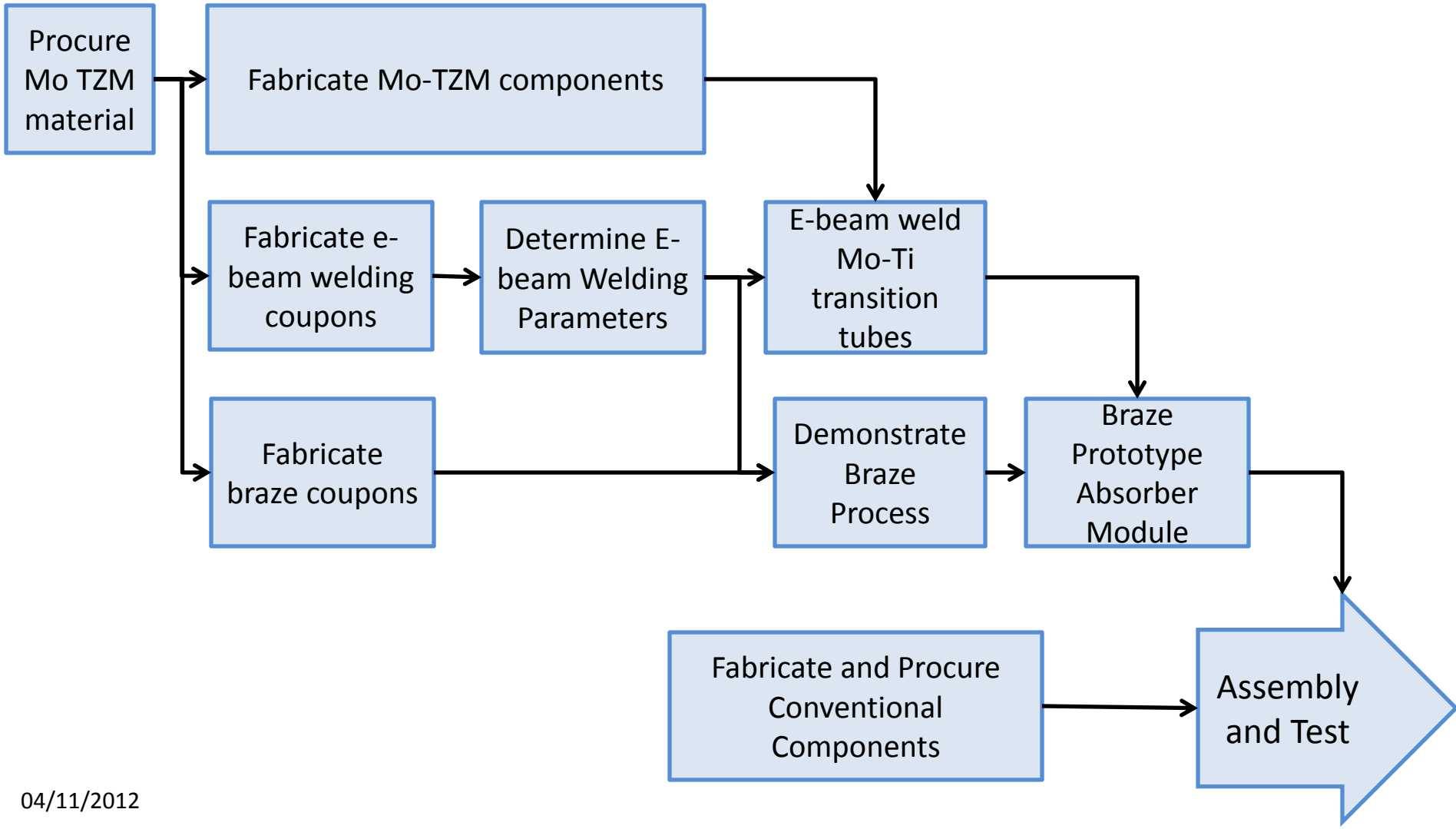
Module Fabrication Process