PXIE Medium Energy Beam Transport

A. Shemyakin
PXIE Review
March 6, 2012

Goals

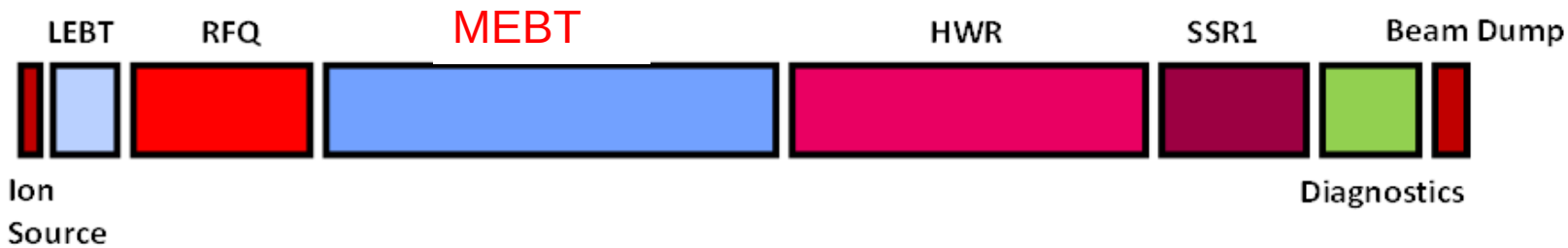

- Medium Energy Beam Transport (MEBT) functions
  - Form the bunch structure required for the linac
    - Bunch-by-bunch selection
  - Match optical functions between RFQ and SRF
  - Include tools to measure the properties of the beam coming out of RFQ and sent to SRF
  - Clean transverse halo particles
- Specifications (draft): http://projectx-docdb.fnal.gov/cgi-bin/RetrieveFile?docid=938;filename=PXIE%20MEBT_Specs20Oct2011.pdf;version=1
  - Stable since Oct 2011

MEBT Functional Requirement Specification

Beamline height from the floor	1.3m
Ion type	H-
Input beam energy	2.1 (+/-1%) MeV
Nominal output energy (kinetic)	2.1 (+/- 1%) MeV
Maximum frequency of bunches	162.5 MHz
Nominal Input Beam Current	5 mA
Beam Current Operating Range	1- 10 mA
Nominal Output Beam Current	1 mA
Nominal Charge per Bunch	30 pC
Residual Charge of Removed Bunches	< 10-4
Beam Loss of pass through bunches	< 5%
Nominal Transverse Emittance	0.27 mm mrad
Nominal Longitudinal Emittance	0.8 eV-μs
Longitudinal Emittance Tolerance	<10% increase over input
Transverse Emittance Tolerance	<10% increase over input
Beam Displacement at exit	< +/- 0.5mm
Beam angle at exit	< 0.5 mrad
Scraping to transverse emittance (n, rms, pulsed mode for 10W avg beam power)	<0.05 mm mrad

- The MEBT creates the final time structure of the PXIE beam, chopping ~80% of the beam with a wideband chopper. The MEBT allows for **bunch by bunch selection**, using a programmable cyclical buffer.

MEBT scheme

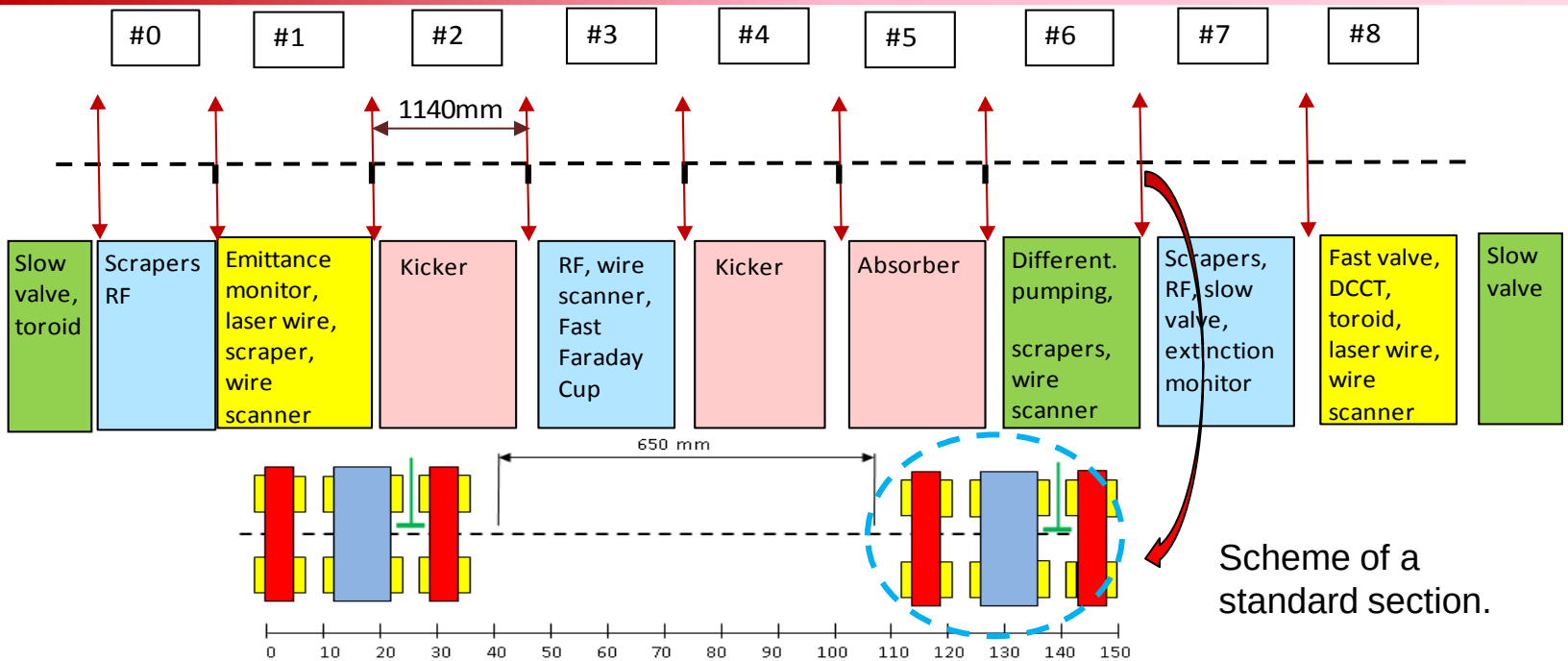

Scheme of a standard section.

- MEBT consists of 9 sections of identical length (1140 mm), bounded by triplets. Total length ~10m.
  - The section #0 is shorter and is bounded by two doublets
  - ~ 90 deg phase advance between sections
  - Two kicker section working in sync

MEBT scheme components

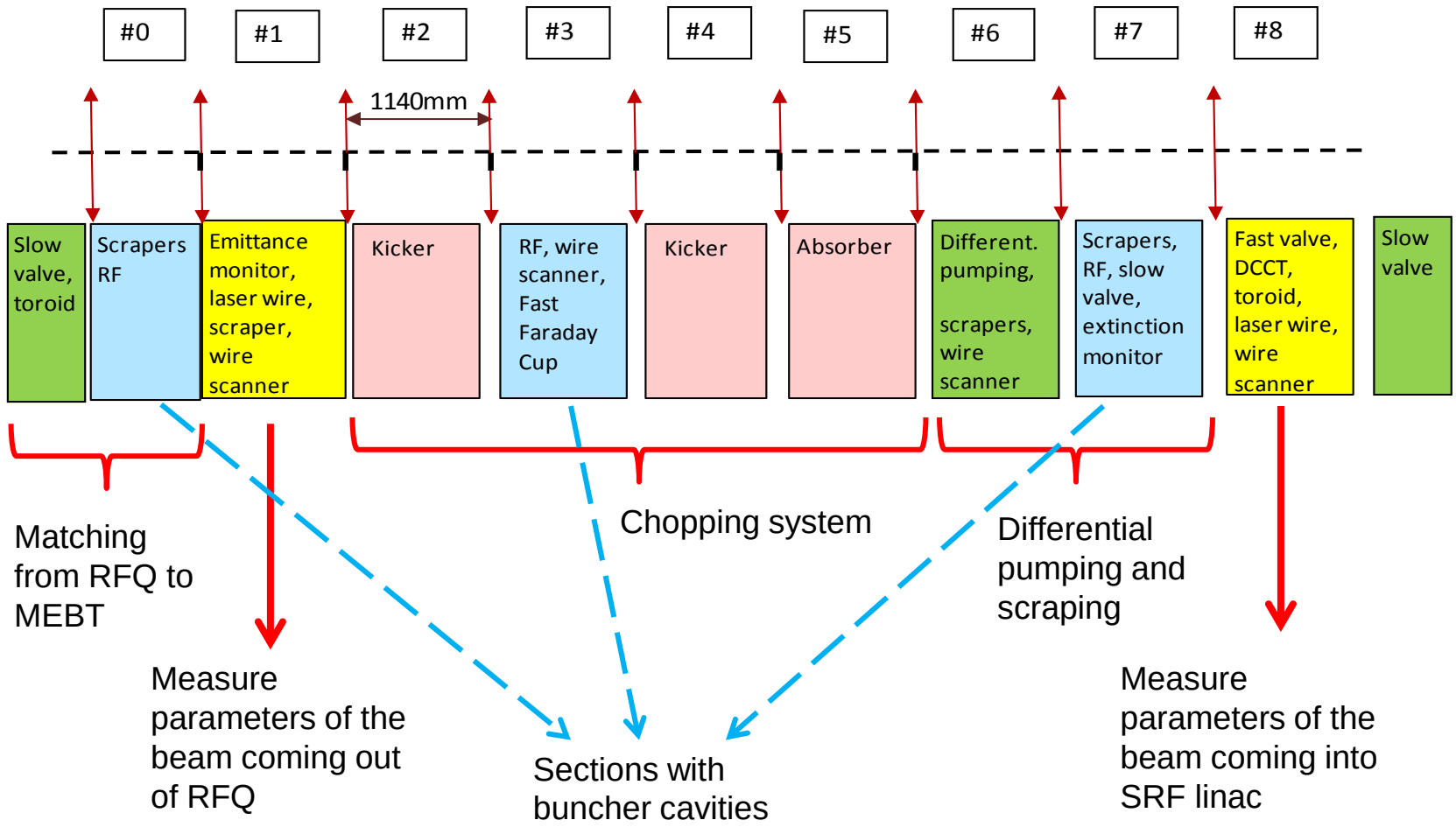

MEBT optics

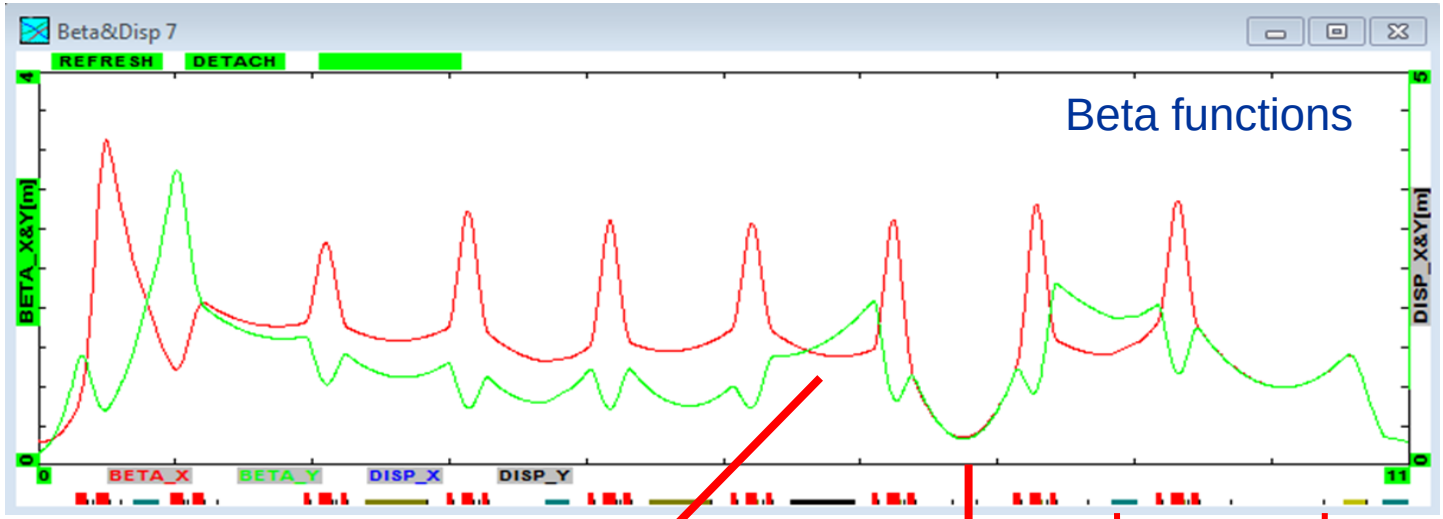

Matching from RFQ to MEBT

Increased beam size at absorber

Small orifice for differential pumping

Matching from MEBT to HWR

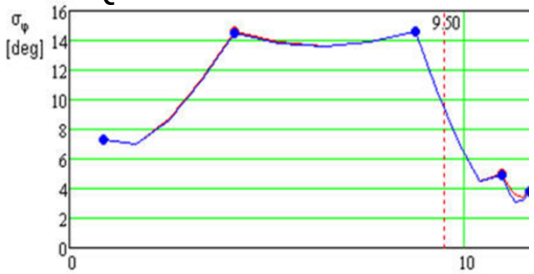

1-sigma longitudinal size of the beam in MEBT, degree of 162.5 MHz

V. Lebedev

Beam chopping

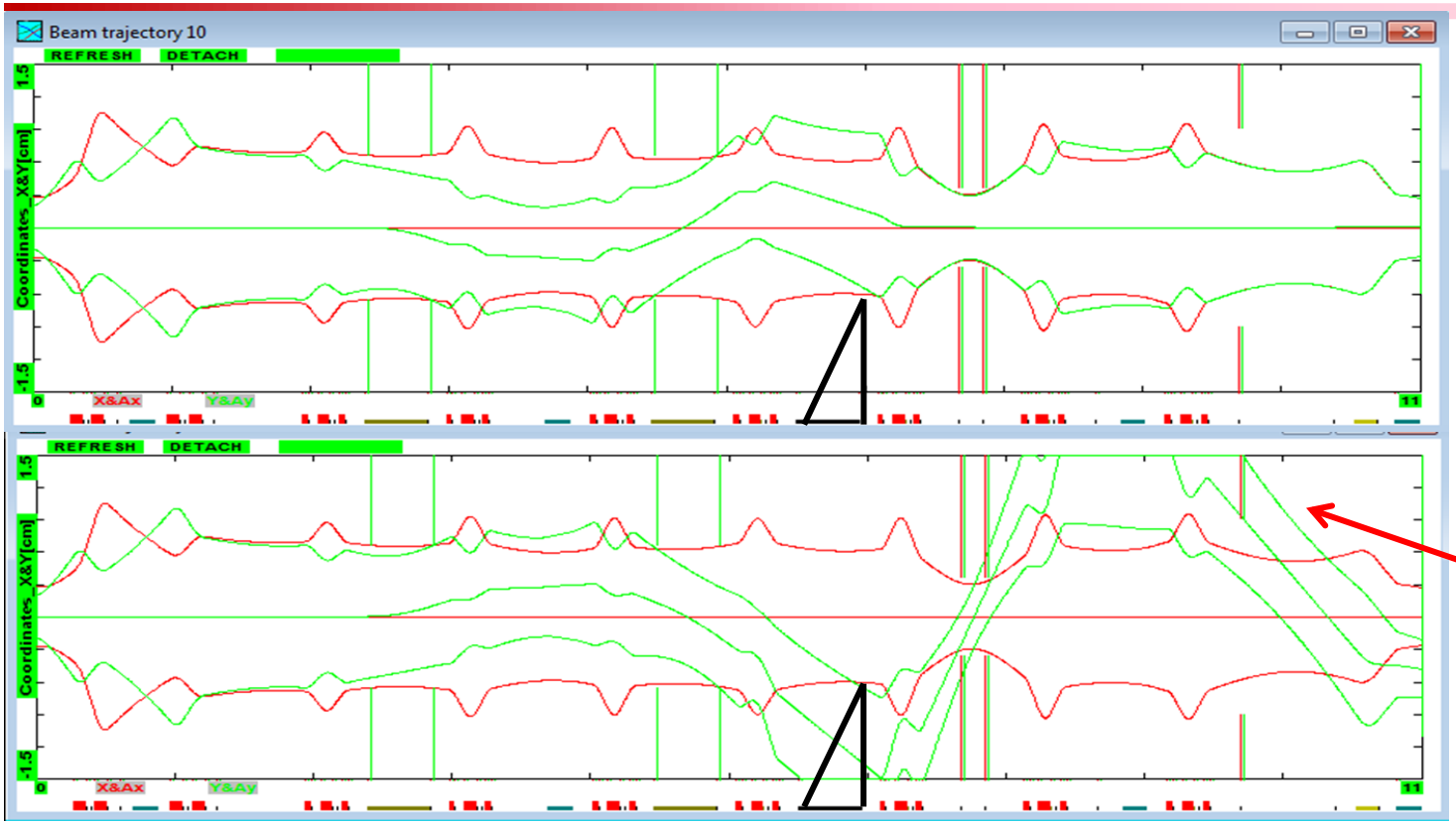

Trajectory of the removed bunches downstream the absorber is an artifact

- Beam trajectory and 3σ envelope at for passing (top) and removed (bottom) bunches

V. Lebedev

Subsystems

- Kickers
- Absorber

The largest risk items. Require significant R&D. Will be described later in more detail.

- Buncher cavities
- Quadrupoles
- Scrapers
- Diagnostics
- Vacuum

Kickers: scheme

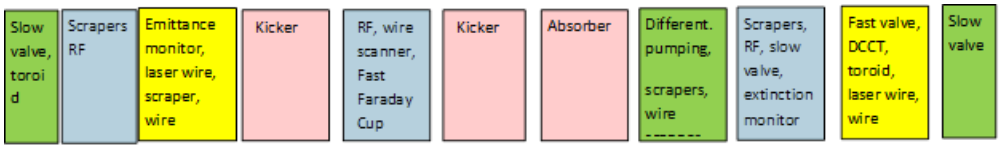

- Two kicker sections working in sync
  - ~180 deg phase advance between
  - Kicker length in one section ~ 50 cm
    - Whether it will be one 50-cm structure or two 25-cm structures depends on results of electromagnetic measurements
  - Vertical deflection (up at absorber)
- Bunch dimensions (6-sigma) at kicker locations are:
  - ~12 mm vertical (Y), ~16mm horizontal (X) , and ~1.3 ns in time.

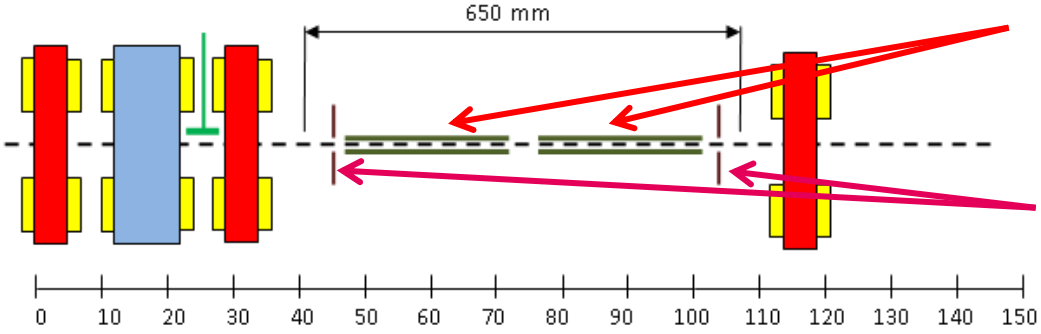

Kicker plates (16 mm gap)

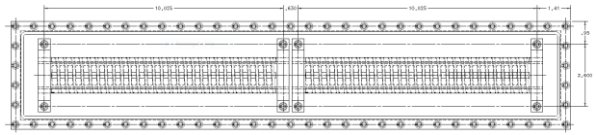

Protection electrodes (13 mm gap)

Kicker box
A. Chen

Kickers: requirements

- Specifications (draft):
  - http://projectx-docdb.fnal.gov/cgi-bin/RetrieveFile?docid=977;filename=MEBT_ChopperSpecs20Dec2011_1.pdf;version=1
- Any bunch of the 162.5 MHz CW train can either pass or be removed.
- The kicker electric field is generated by applying equal and opposite polarity voltage to the two opposing electrodes of each kicker assembly.
  - "Bipolar scheme": The voltage is applied to kick the beam out, and the opposite polarity is applied to kick beam in and allow it to pass through.
  - 250 V in each polarity
  - For passing bunches, the flat top tolerance is ±25 V
  - Flat top duration is 1.3 ns
  - the maximum average frequency of switching cycles is 33 MHz
- At this stage, two versions of a traveling-wave kicker are being developed
  - "50 Ohm version"
  - "200 Ohm version"

50 Ohm version: kicker

- Flat electrodes connected by delay lines
  - 5.5 cm x 1.5 cm kicker electrodes with 2 cm period; 25 electrodes
  - Delay lines are either microstrips or coaxial cables

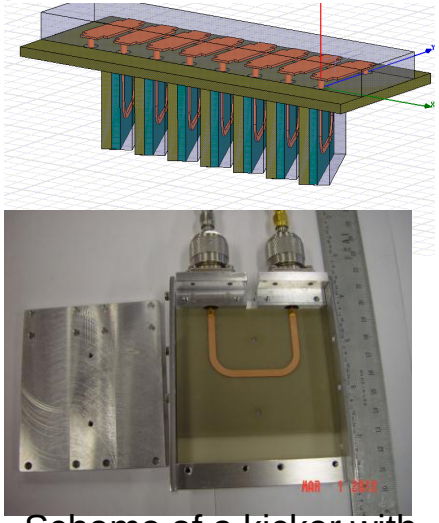

Scheme of a kicker with striplines and testing a model

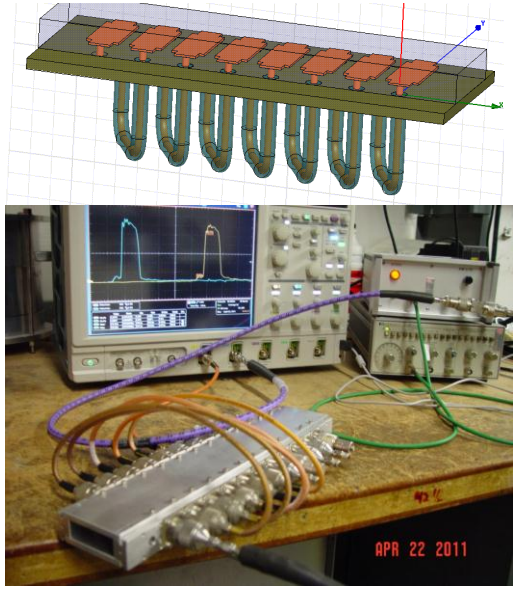

Scheme of a kicker with coaxial cables and testing a model

- Tests of models showed properties compatible with 50-cm long kickers
- Electromagnetic design of vacuum-compatible units is complete
- Mechanical design of vacuum-compatible units is underway

D. Sun, V.Lebedev

50 Ohm version: driver

- Specifications are included in
  - http://projectx-docdb.fnal.gov:8080/0009/000990/001/TESEQ%20test%20lg-1.pdf
- Linear amplifier and pre-distortion
  - The desired driver signal is a sum of individual 6.15 ns forms

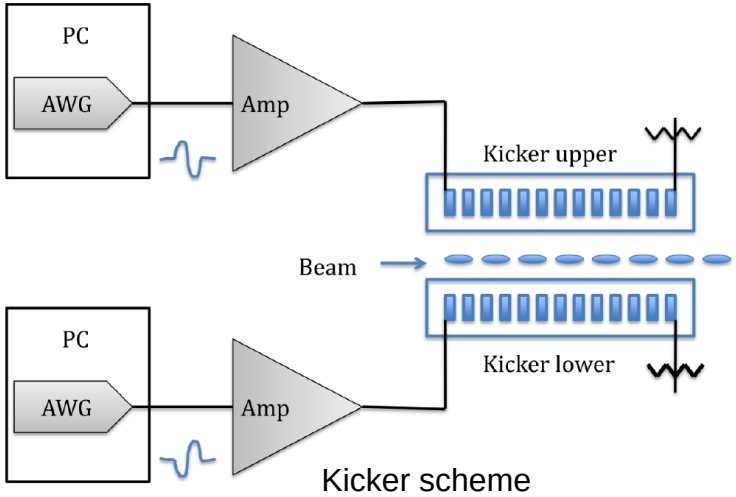

Kicker scheme

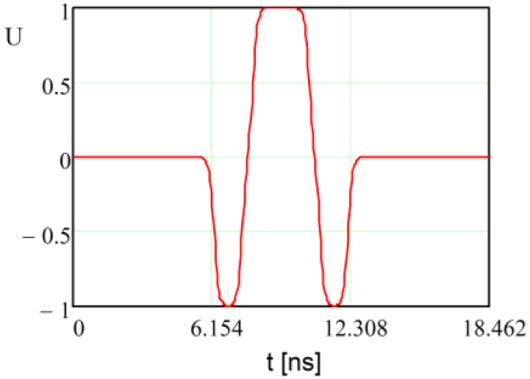

Each kick is formed by a triple-pulse shape.
Amplifier bandwidth 0.05-1 GHz

V. Lebedev, R. Pasquinelli, D. Peterson

50 Ohm version: driver test

- The concept was successfully tested with Teseq 150W amplifier
  - up to 120 V amplitude
  - 1 KW amplifier should have similar characteristics (under investigation)
- Seems to be a purchase – ready solution
  - Need to resolve concerns about operation with long-period patterns

Test setup

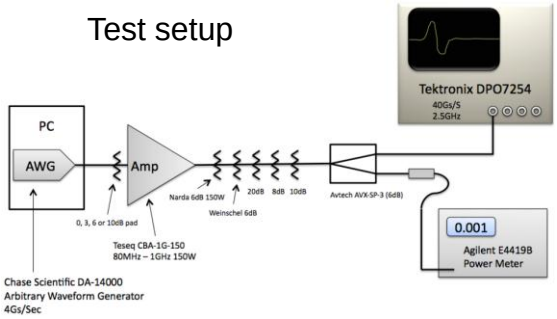

"Bunch passed"

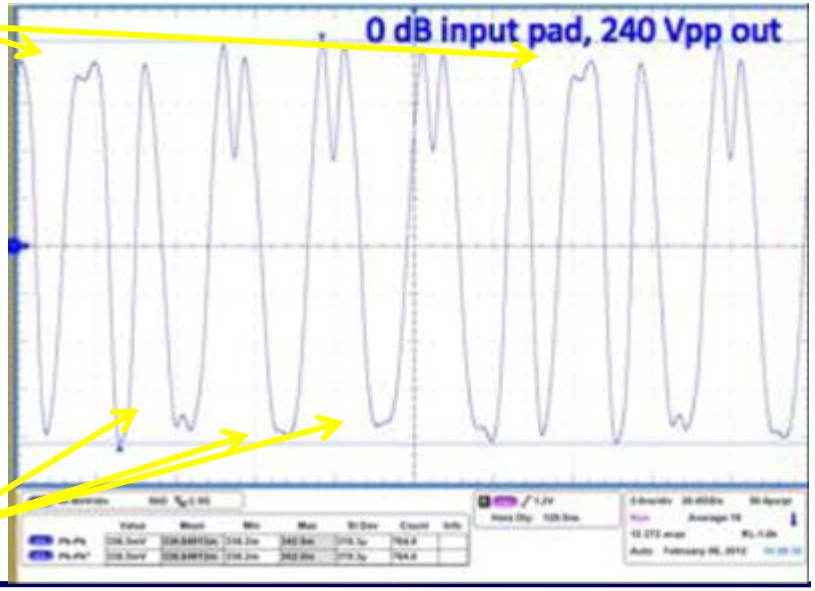

"Bunch removed"

V. Lebedev, R. Pasquinelli, D. Peterson

200 Ohm version: kicker

- Helical structure with attached electrodes
- Electromagnetic tests of a model showed properties compatible with 50-cm long kickers
- Mechanical design of a vacuum-compatible unit is underway

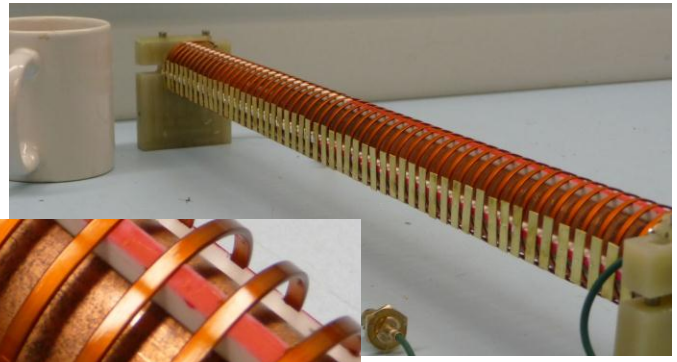

50 cm long model of 200 Ohm helical kicker

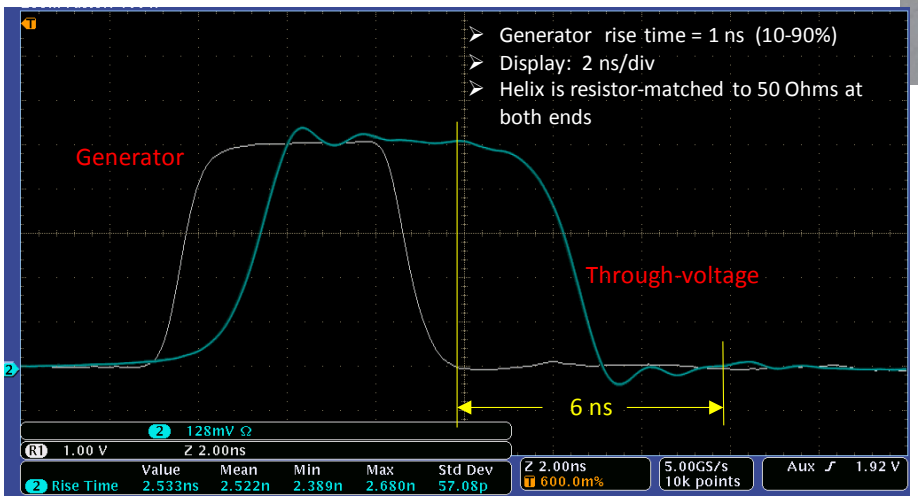

Pulse at the exit of the helix.
The pulse used to produce the input voltage is wider than showed generator pulse.

G. Saewert

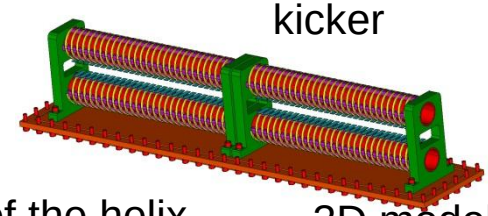

3D model of vacuum-compatible unit

200 Ohm version: driver

- Specifications:
  - http://projectx-docdb.fnal.gov/cgi-bin/RetrieveFile?docid=979;filename=ChopperDriverSpec23December2011.pdf;version=1
- Development at Fermilab and at SLAC
- SLAC efforts (T. Tang, C. Burkhart)
  - Based on SLAC development for ILC DR
  - Hybrid MOSFET driver
  - Dissipated power is the main issue being addressed

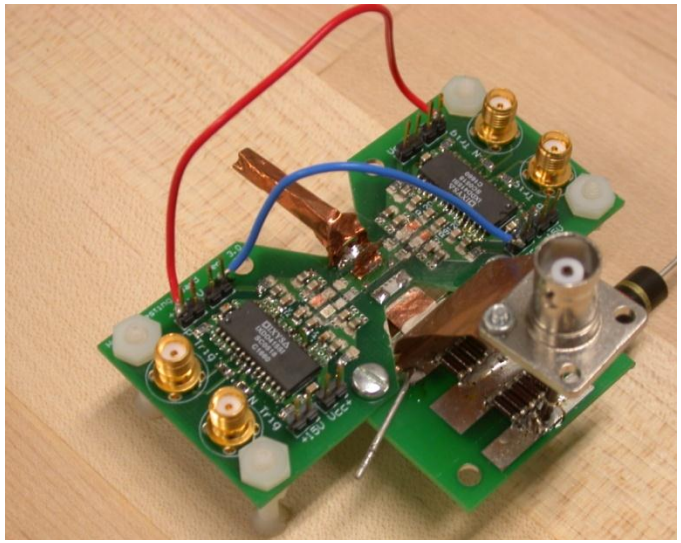

200 Ohm version: driver (cont.)

- Development at Fermilab (G.Saewert):
  - multiple-FETs in a series-connected, cascode configuration
  - GaN (gallium nitride); presently available with 200 V break-down
  - Possible because 200 Ohm scheme requires 4 times lower current than 50Ohm scheme

Scheme of driver for one electrode of the helical kicker

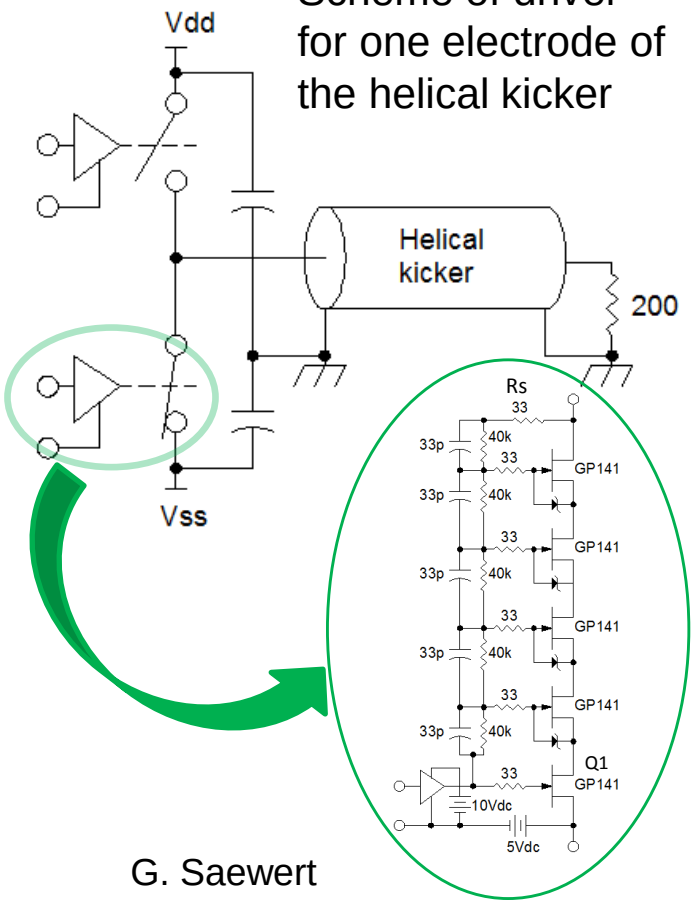

G. Saewert

200 Ohm version: switch test

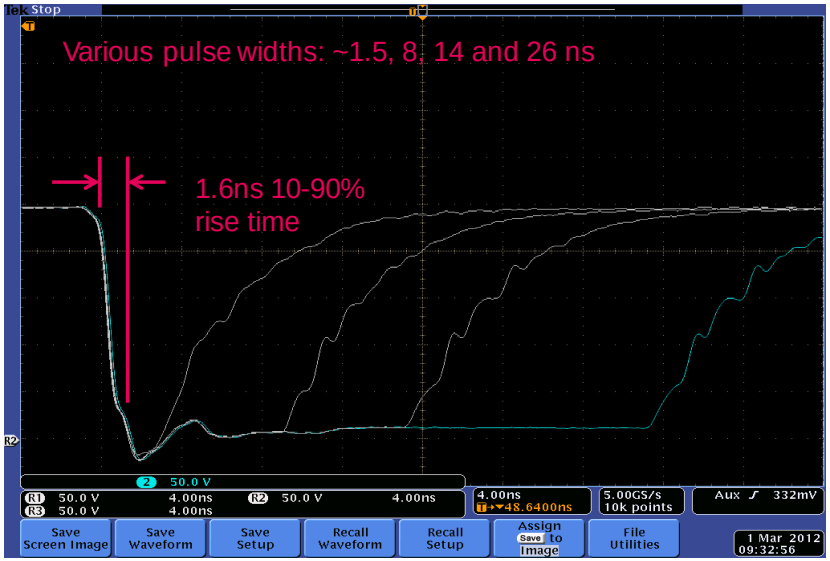

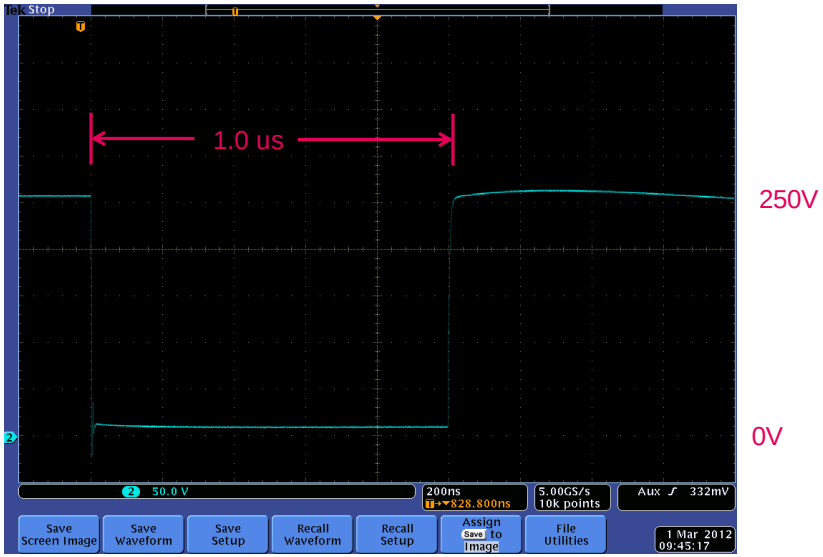

- Test of one switch with different pulse durations
  - The figures of merit are the rise time (1.6 ns) and the pulse voltage (up to 300 V)
  - So far, 3 transistors in series
- No show-stoppers

G. Saewert

Absorber

- The absorber should withstand 2.1 MeV X 10 mA = 21 kW focused into a spot with 2 mm rms radius
- Difficulties:
  - Thermal load
  - Mechanical stress
  - Outgassing
  - Blistering
  - Sputtering

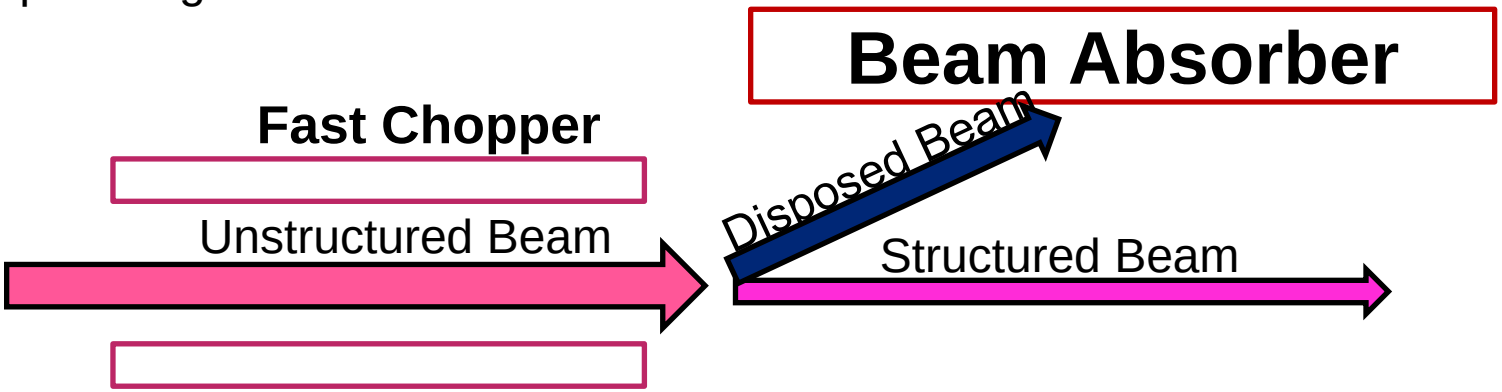

Absorber: conceptual solution

- Small grazing angle, 0.029rad
  - ~22 W/mm^2 maximum power density of the face of the absorber
- TZM (Molybdenum alloy)
  - High operating temperature (~1000°C max)
- Mm-size transverse water channels
- Transverse slits to decrease mechanical stress

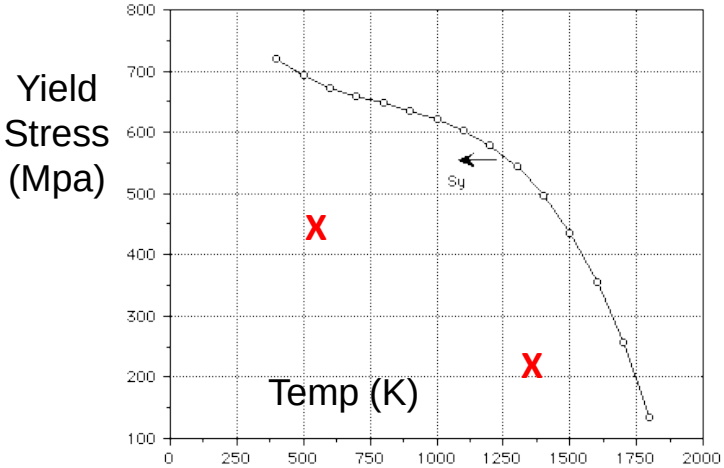

C. Baffes

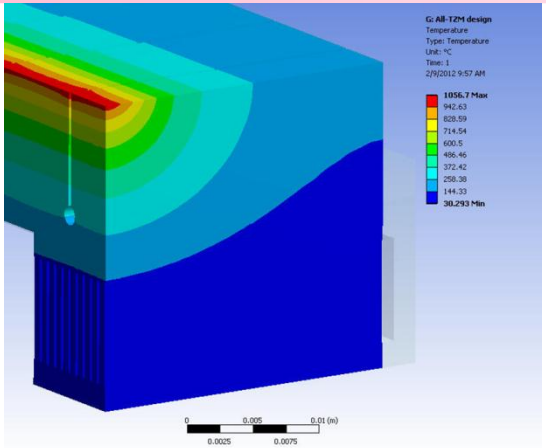

Thermal analysis

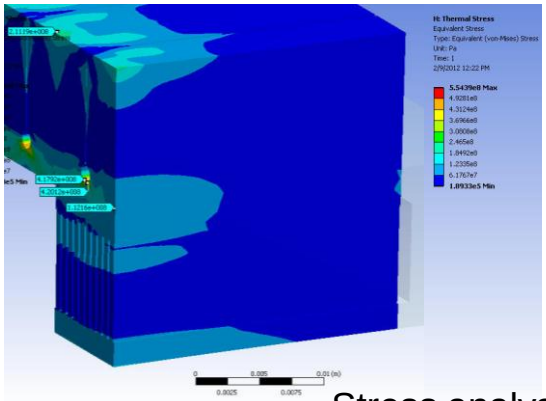

Stress analysis

Absorber: Packaging Concept

- Absorber is composed from 4 identical pieces on a common rail
  - Simplifies manufacturing
  - Single unit will be tested with e-beam

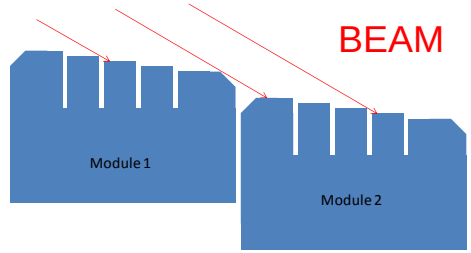

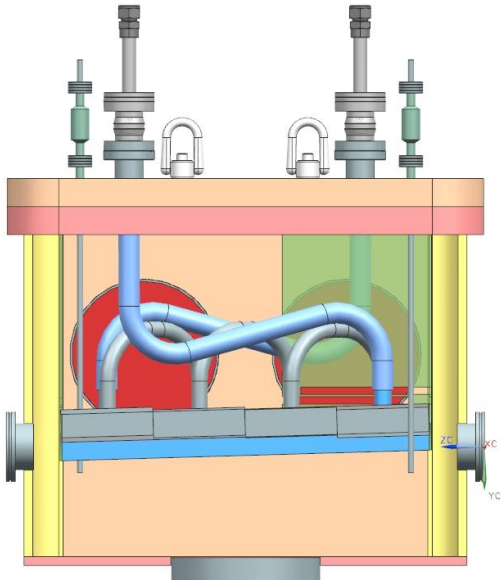

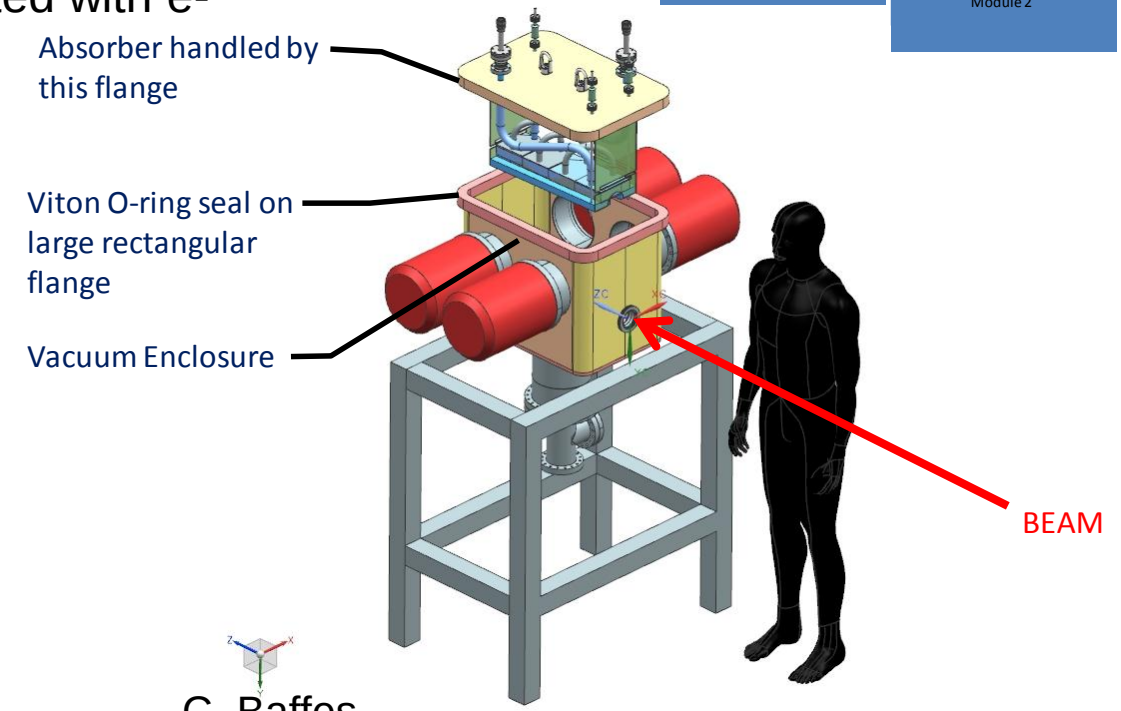

C. Baffes

Absorber: test with an e-beam

- Technical design of the prototype unit is underway
  - ¼ of the full absorber
- Will be tested with a 30 kV, 0.17 A electron beam
  - Re-using parts from the electron cooler test bench
  - The same surface power density due to increased grazing angle (120 instead of 29 mrad)

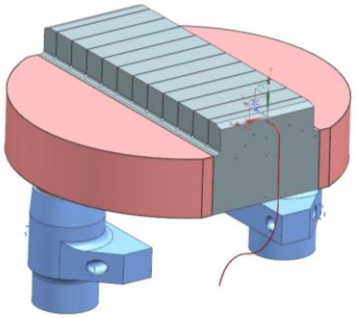

C. Baffes

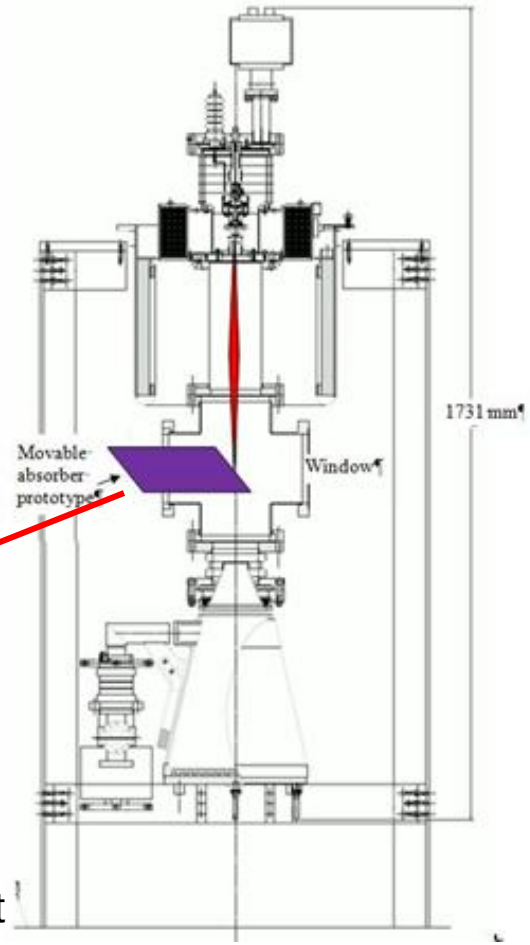

J. Walton, L. Prost

Quadrupoles

- Specifications (draft):
  - http://projectx-docdb.fnal.gov/cgi-bin/RetrieveFile?docid=933;filename=MEBT%20quads_4.pdf;version=4
  - Two types of quads, F (10 cm magnetic length) and D (5 cm)
  - Maximum integrated gradient- 1.5T/0.85T (F/D)
  - Tip separation – 34 mm (diam.)
  - Good field region- 34 mm (diam.)
  - Field quality- 1%
  - Integrated dipole coils (F)
    - 2.1 mT*m
- BPMs between quads
  - Installed before final assembly of quads
- Stage of conceptual design

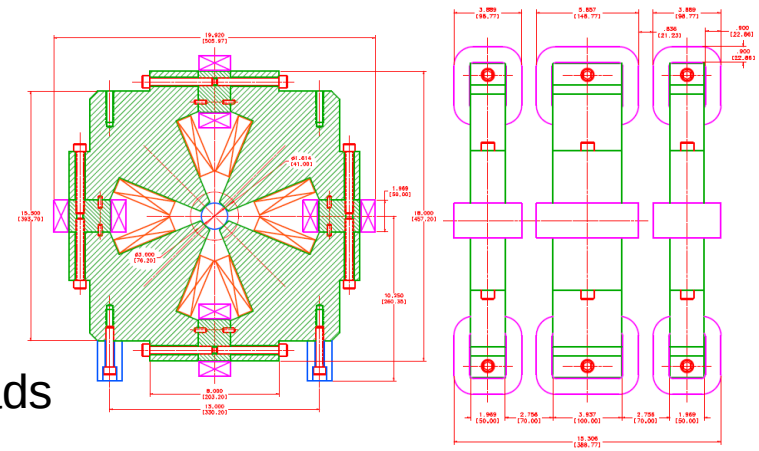

Vl.Kashikhin, A.Makarov

Buncher cavities

- Quarter-wave, 162.5 MHz resonators
  - Gap- 2X25 mm
  - Aperture radius- 20 mm
  - Max. energy gain - 100 keV
  - Power- 2.8 kW
  - Q factor- 8533
- Electromagnetic and thermal analyses are complete
- Stage of the technical design

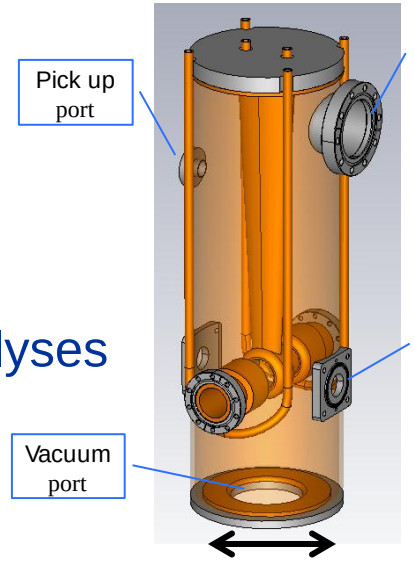

190 mm OD

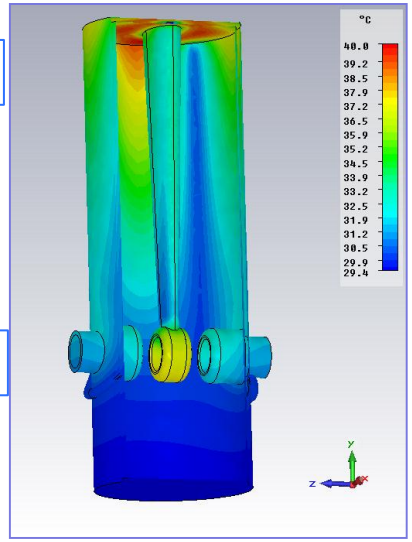

Thermal analysis for P_{loss}=4.6kW, V_{eff}=130 kV

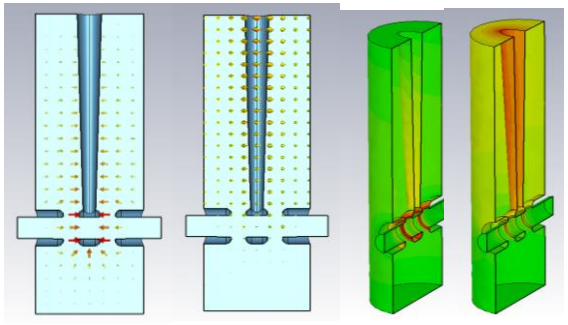

Volume and surface electric and magnetic fields. E_{max} = 7.6 MV/m, B_{max} = 97 G

G.Romanov

Vacuum: requirements

- H- stripping
  - Minor effect for the intensity decrease, but neutrals might flight all the way to SRF and end up at cavity walls
  - Decided to limit the integral of (pressure)*(length) by $1\cdot10^{-6}$ Torr·m
    - Corresponds to the stripping probability of $1.4\cdot10^{-4}$.
  - The flux of neutrals will be collimated in several locations of MEBT
- Gas load to SRF (Half Wave Resonator)
  - Hydrogen deposition on cavity walls should be << monolayer
  - Main gas load is H2 produced from H- at absorber (and scrapers)
    - 5mA = $4.4\cdot10^{-4}$ l·torr/s of H2
  - ANL operates SRF with ~$5\cdot10^{-8}$ Torr in the adjacent warm part
    - Decided to require P<$5\cdot10^{-9}$ Torr at the end of MEBT
  - Solution: strong pumping of the absorber; differential pumping section

Vacuum profile

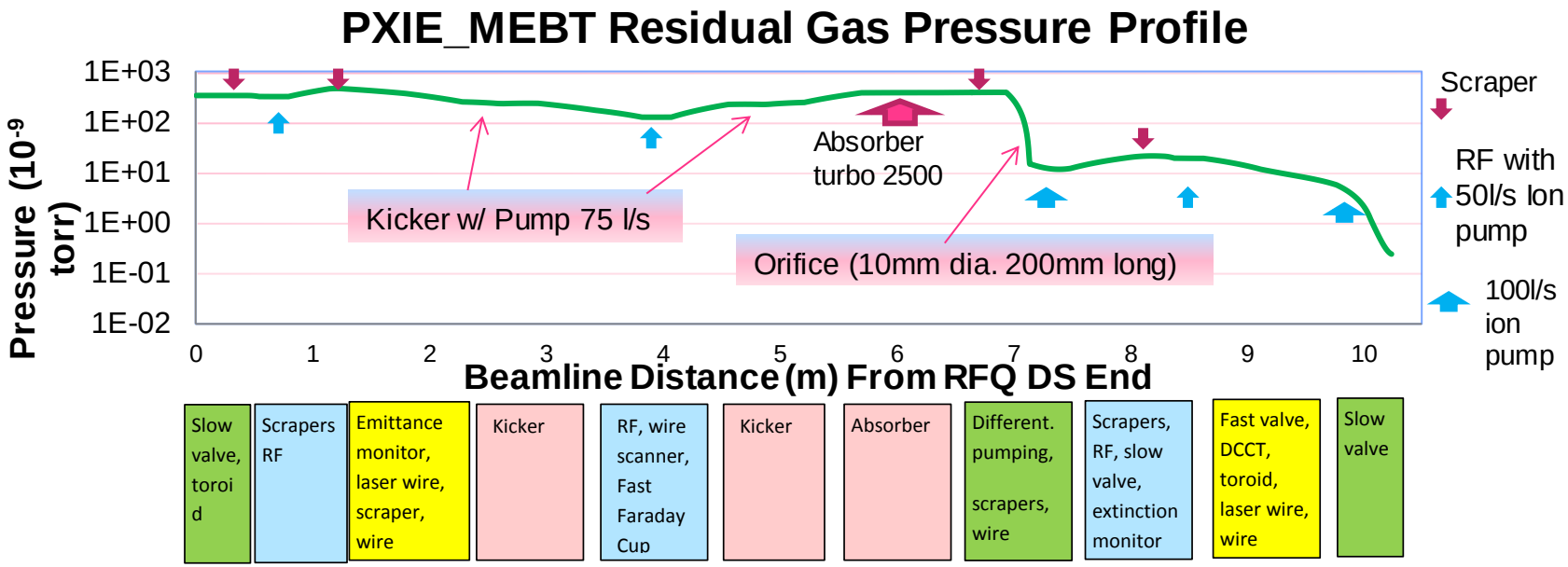

Solution:

- strong pumping of the absorber;
- - differential pumping section

Stage:
conceptual design

A.Chen

Protection and scraping

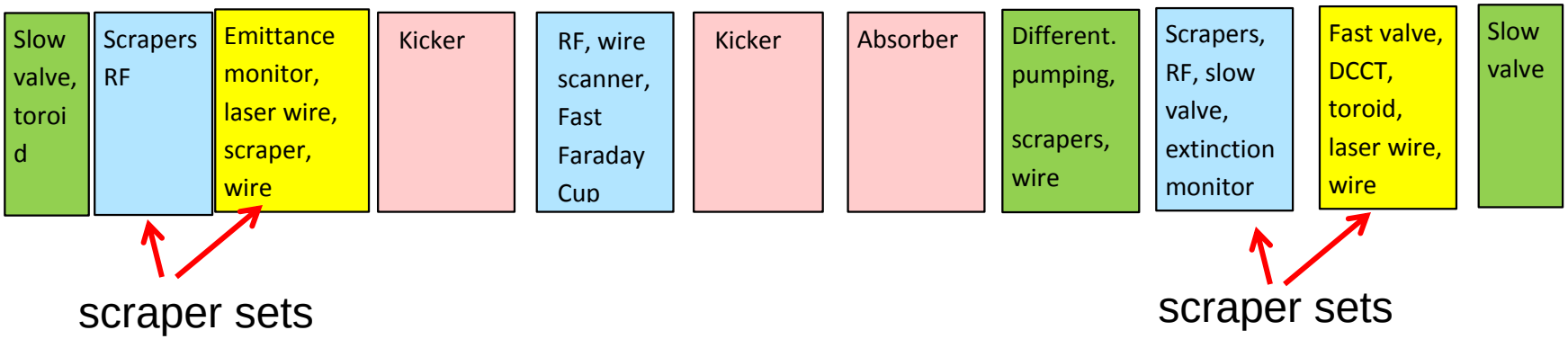

- We are discussing installation of 4 sets of scrapers
  - Each set may consist of 4 individual scrapers
    - Ideally, each would be movable, electrically isolated, water cooled (50W)
  - 90º phase advance in each pair
  - The first pair scrapes up to 1% of the CW beam and protects kickers
  - The second pair scrapes up to 1% of the 1 mA beam and protects SRF
    - Final aperture intercepting neutrals
- Stage: pre-conceptual design

Diagnostics

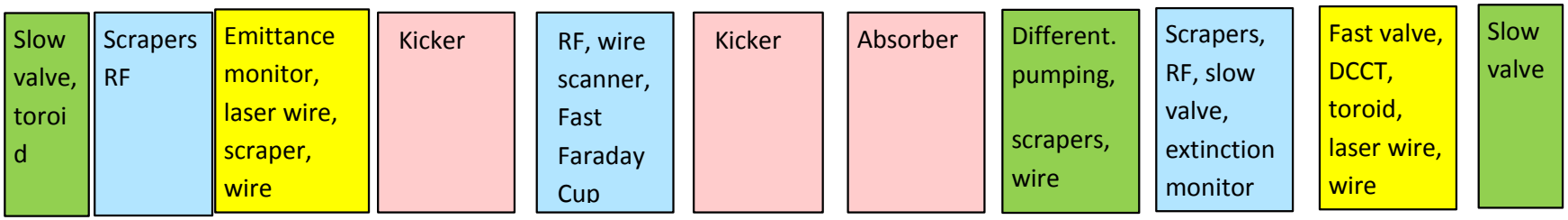

- BPMs in each triplet or doublet (3D positions)
  - Draft of specifications
- A set of diagnostics to analyze the RFQ beam
  - Toroid, emittance monitor, laser wire(s), wire scanners, fast Faraday cup
  - Scrapers as halo diagnostics
- A set of diagnostics to analyze the beam going to HWR
  - Toroid, DCCT, laser wire(s), wire scanners, extinction monitor
  - Scrapers as halo diagnostics
- Stage: preliminary discussions

Procurement items for FY12

- Parts for the absorber test bench
- Absorber prototype
- Kicker vacuum box
- Kicker prototypes
  - Both 50 and 200 Ohm versions
- 200 Ohm feedthroughs and loads
- Materials for the quadrupole prototype

Summary

- Specifications for MEBT have been written and discussed
- R&D is being actively pursued for the most challenging subsystems, absorber and kickers; no showstoppers found
  - Specifications have been written and discussed
  - Conceptual designs are underway;
  - Plan to manufacture and test a beam absorber prototype with electron beam in FY2012
  - Plan to manufacture and test kicker prototypes in fall of 2012
- Other subsystems are progressing
  - Buncher cavities – technical design
  - Quads, BPMs - conceptual design
    - Quad prototype in FY12